Skill Level 4

Slightly Challenging

The TTV (Timer Test Vehicle) began as an internal project to allow us to quickly and inexpensively test the new version of the Simple Timer (version 3) and it quickly became apparent just what a useful little rocket this is. It's designed to do exactly what the name suggests, to allow testing of staging timers. What that means, however, is that the TTV is an excellent indirectly staged rocket for low-cost flights with electronics. It also is capable of flying with electronics beyond those that we originally designed it for. Despite the small size of the rocket, the ebay is actually large enough to test a wide variety of flight computers either for use as an apogee deployment charge, as a staging controller, or both. This makes the TTV usable for both single and two stage flights and for both black powder and composite motors.

This kit represents the third version of our inhouse design with a majority of the later work focused on making sure that this kit is as easy to build and use as possible. Given its small size and the fact that we wanted to allow use of either electronic or motor ejection, there is a lot of technology packed into a small space with this model. That could easily make for a difficult build, awkward use, or both. Neither of those were what we wanted. Who wants a test program that's difficult? So we went to work finding all the pain points and smoothed them out to make a rocket that takes advantage of modern electronics and high-impulse motors to bring indirectly staged rocketry into a baseball field friendly package.

Kit #05064 **Assembled In USA**
Skill Level 4

TTV

TTV Parts List

Item #	Item Name	Qty
09184	Simple Switch with 4" Wires	1
10002	4mm x 3" LC Straw	1
10068	AT-18/2.75"	1
10091	AT-24/3.75"	1
10117	AT-33/7.5"	1
10152	AT-41.6/18"	1
13029	CR-13/18 (BLUE)	1
13031	CR-18/24 (GREEN)	2
13056	1/4" Launch Lug 3" Long	2
13075	Removable Plastic Rivet	2
13121	AC-41.6	1
15418	TTV Ebay and Centering Rings Sheet 1/8" Ply	1
15419	TTV Frame Sheet Cardstock	1
15730	TTV Fin Sheet 3/32"x4" Basswood	1
19469	PNC-41.6 (BT-60)	1
24043	Regular "D" Crimped Engine Hook	1
24044	Crimped "E-size" Engine Hook	1
29090	12" Printed Nylon Parachute	1
29092	18" Printed Nylon Parachute	1
29519	100# Kevlar x 6 feet	1
29526	300# Kevlar x 6 feet	1
31267	TTV Instruction Sheet A	1
31268	TTV Instruction Sheet B	1
31269	TTV Instruction Sheet C	1
31270	TTV Instruction Sheet D	1
39058	TTV Face Card	1
41114	TTV Decal Sheet 1	1
41115	TTV Decal Sheet 2	1

Needed Tools and Materials

- ☐ Pencil
- ☐ Hobby Knife with Sharp Blades
- ☐ Razor Saw
- ☐ Wood Glue
- ☐ Thin CyA Adhesive
- ☐ Medium CyA Adhesive
- ☐ Masking Tape
- ☐ Sandpaper (180-220 grit and 320-400 grit)

Optional Tools / Finishing Supplies

- ☐ Electronics for Staging (such as Simple Timer P/N 09142)
- ☐ Fin Alignment Guides (P/N 35539 and P/N 35546)
- ☐ Paper Towels
- ☐ Spray Paint
- ☐ Soapy Water
- ☐ Wood Dowel

Manufactured in the USA by:
Apogee Components Inc.
Colorado Springs, Colorado, USA
www.ApogeeRockets.com

Instruction Sheet A: P/N 31267 *Updated 6/23/2023

Sustainer Assembly Steps:
The Ebay and motor mount form the core of the sustainer, and its assembly needs to be accurate to ensure that the remainder of the sustainer is straight and true. Take special care through this first section to align the parts as accurately as possible.

1. Remove the Ebay base plate, rings B and C, and frame E from the plywood parts sheet. Also remove frame D from the cardstock parts sheet.

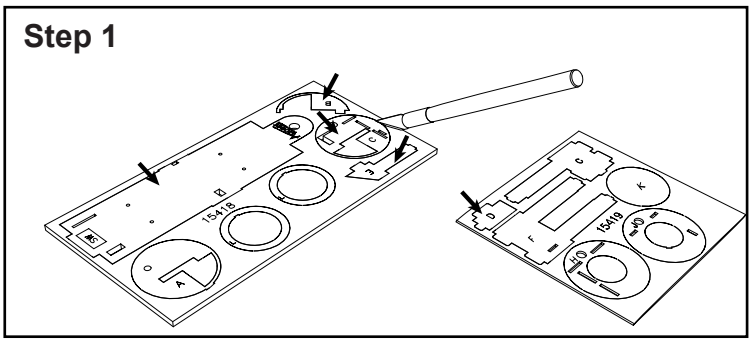

2. Insert frame D on the bottom of the base plate (the unmarked side) with the small tab facing towards the outside edge, and glue the frame into place by running a small amount of thin CyA adhesive along the joint.

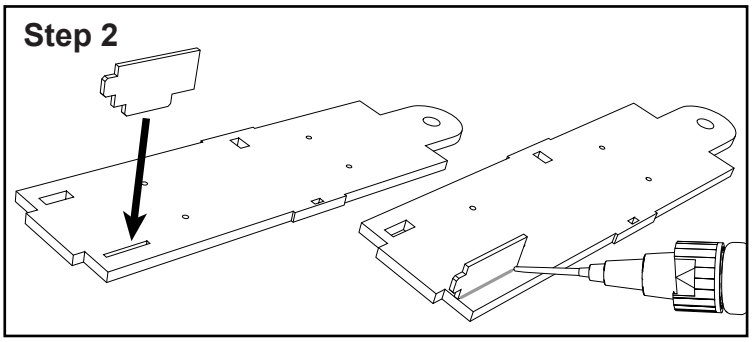

3. Insert frame E on the top of the base plate (the side with engraving) so that it sticks out from the base plate and glue it into place by running thin CyA adhesive along the joint.

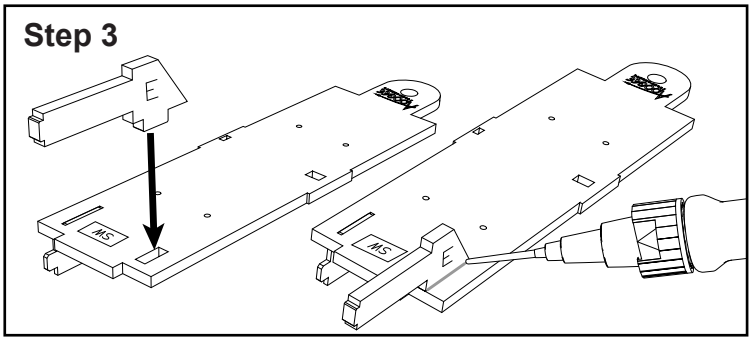

4. Slide ring C onto the back of the base frame with the “C” engraving facing the base and the small round hole at the top, passing frame E through the ring and pushing ring C until the tab on frame D and the base plate are flush with the back side of the ring. Glue ring C into place by running thin CyA along the joints.

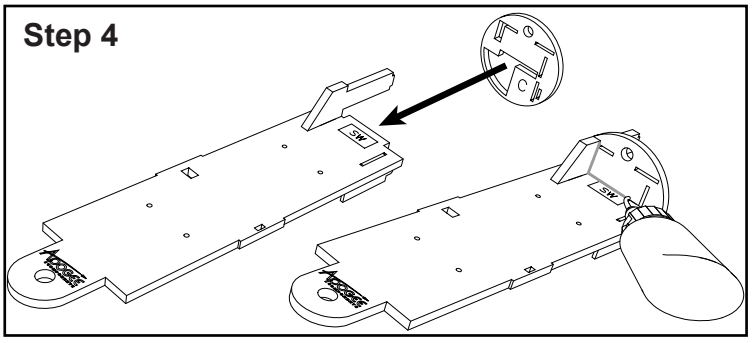

5. Install ring B (the half-ring) into place on the bottom of the base plate (on the side opposite the Apogee Logo) by sliding it into place with the “B” engraving facing away from the C/D/E parts, and then securing it with thin CyA adhesive along the seams.

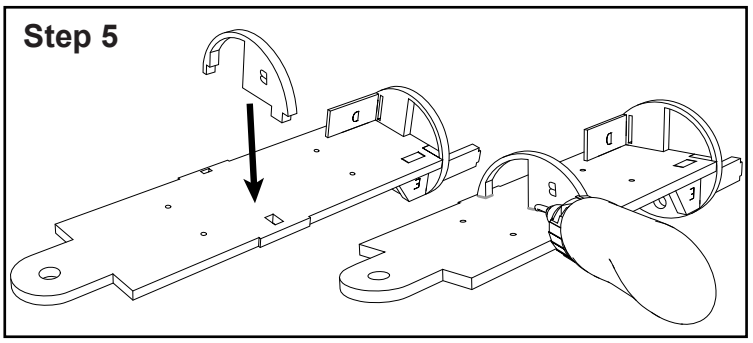

6. Separate the laser cut red coupler pieces with a hobby knife, and remove the waste parts (four trapezoid shaped sections and a small rectangular section on one of the ends). The section with a thin ring is the forward section while the section with a wide ring is the aft section.

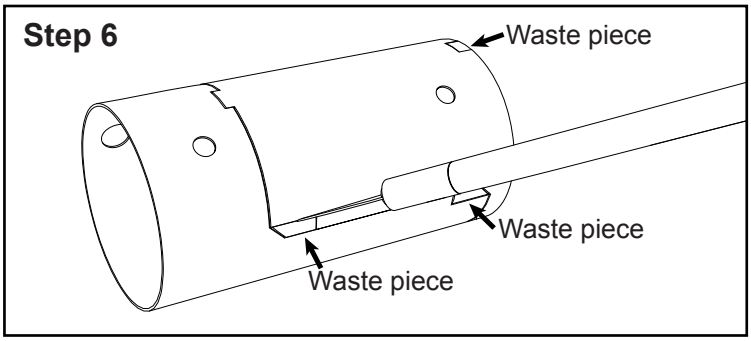

7. DO NOT APPLY GLUE TO RING B AT THIS TIME! Apply wood glue to the long edges of the aft coupler section (extending through the coupler to the aft edge) as well as a bead around the aft inside edge of the coupler. Slide the base plate assembly into the coupler section from the cut side so that the end of frame E sticks out behind the full ring of the coupler and the tabs on the base plate are inserted entirely into the notches in the coupler. The forward edge of the coupler sits in the middle of ring B. Clean off any glue that squeezes out of the coupler, then allow the glue to dry until the parts are solidly attached.

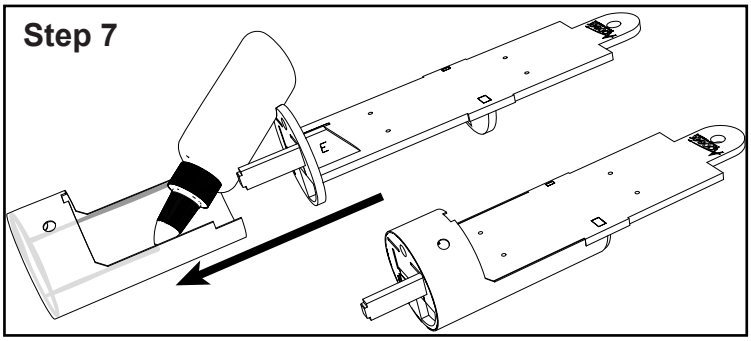

8. Remove ring A from the plywood sheet and remove the internal waste parts.

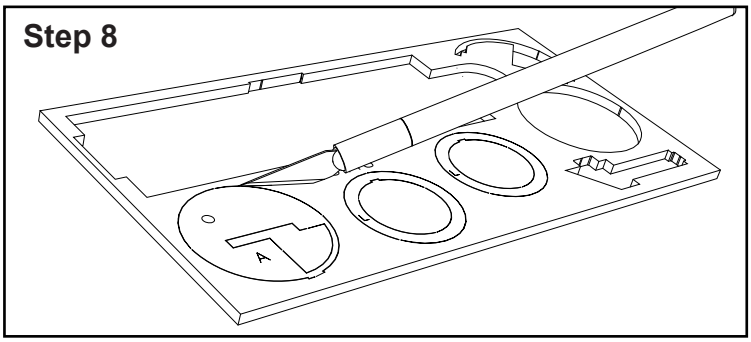

9. ONCE AGAIN, DO NOT APPLY GLUE TO RING B! Apply wood glue to the long inside edges of the forward section of the coupler. Slide the forward coupler section into place. The plywood base plate should be flush with the cut edges of the coupler and there should be no gap between the two coupler sections where they join over ring B.

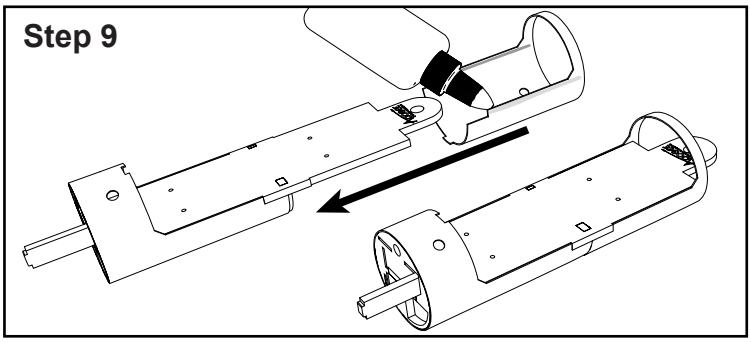

10. Apply wood glue to the inside of the forward end of the ebay coupler as well as the forward edge of the base plate and install ring A so that the “A” label is facing toward the interior of the ebay and the small hole is on the top, and slot the tab into the notch in the forward coupler section.

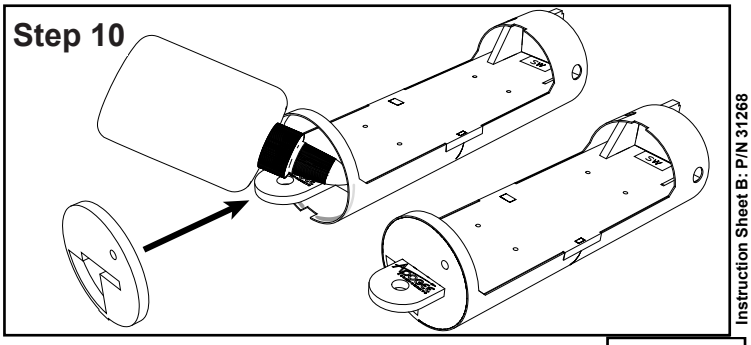

11. Glue the two coupler sections to the center ring B by allowing thin CyA adhesive to wick into the joint above ring B. This will secure the coupler sections to the ring and to each other. Set the Ebay assembly aside to dry.

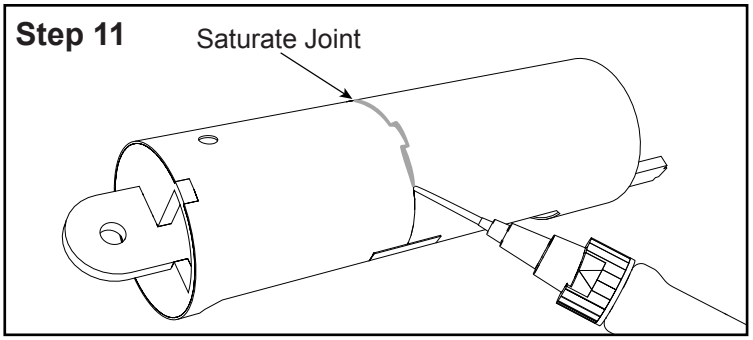

12. Cut a small 1/8” (3mm) wide slot into the AT-18/2.75” motor mount tube at a distance of 1/4” (6mm) from one end. Also, mark the tube 1-1/16” (27mm) from the other end. The slot will become the forward end of the motor mount tube.

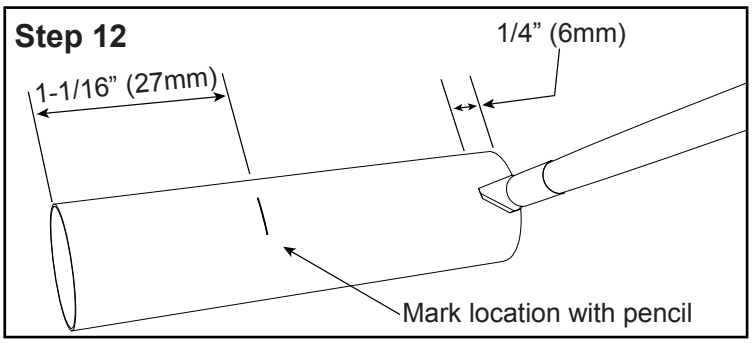

13. Insert the right angle of the motor hook into the slot in the tube, with the other end hanging over the aft end of the tube. Then apply a thin bead of wood glue around the tube just in front of the 1-16” (27mm) line. Slide one of the green CR-18/24 center rings over the front of the tube so that it sits on the front side of the mark.

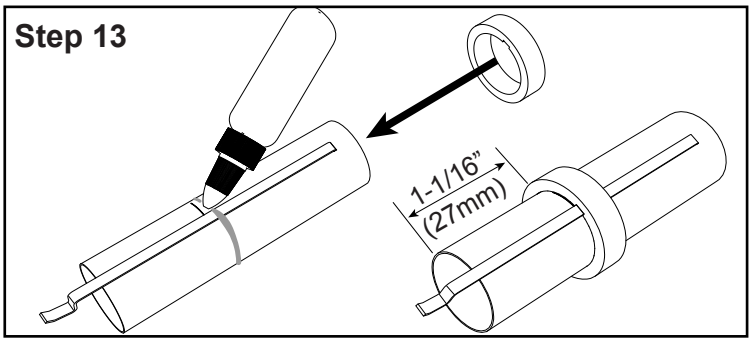

14. Remove ring J from the cardstock sheet. Make a ring of wood glue directly behind the green ring from the previous step, and slide the cardstock ring with the “J” label facing forward (toward the green centering ring installed in the last step) until it is flush with the ring. The engine hook should be routed through the notch in the ring to ensure correct alignment of the hook with respect to the fins.

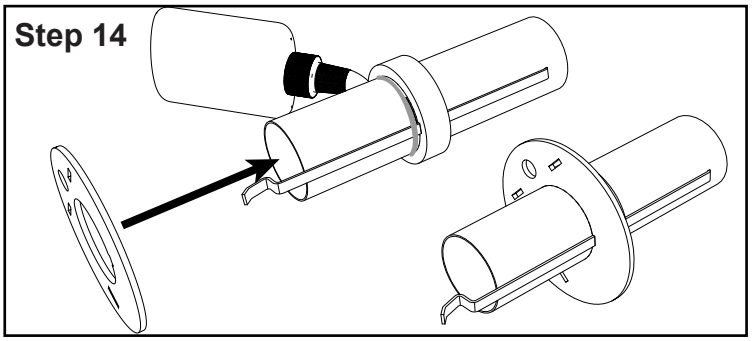

15. Apply a ring of wood glue inside the forward end of the motor mount tube and slide the blue CR-13/18 centering ring into the forward end of the tube. The ring should be flush with the end. Set the motor tube assembly aside to dry.

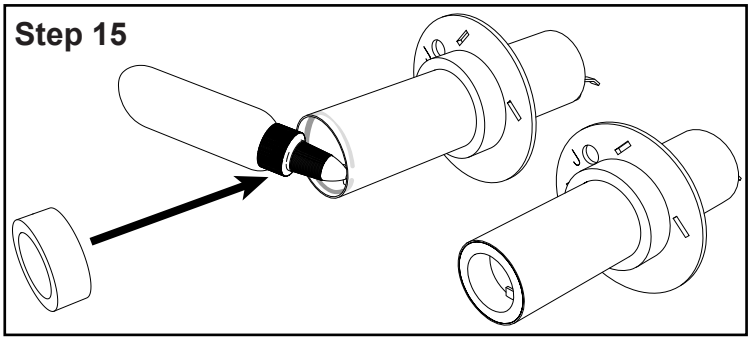

16. Cut out frames F and G as well as ring H from the card-stock parts sheet.

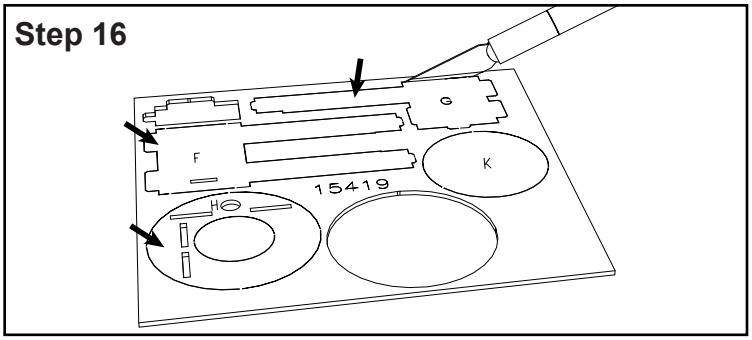

17. Dry assemble frames F and G. Face the F on the frame up, and then insert the tab on the G frame into the notch on the F frame, with the G notation on the outside. Insert the assembly into the aft end of the ebay bulkhead (into the slots on ring C). Hold the parts together with no gap then secure the frames by running thin CyA along all the joints.

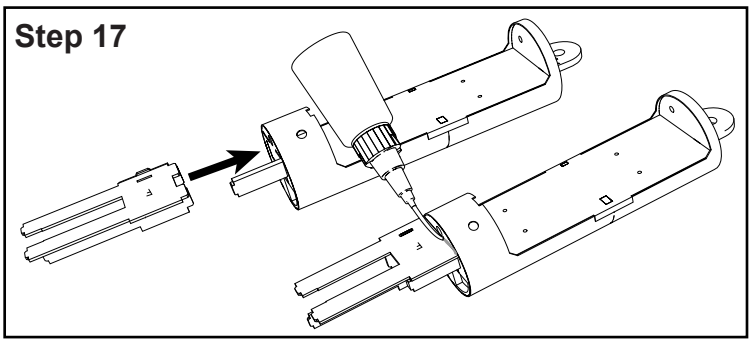

18. Slide ring H onto frames F and G with the label on ring H facing aft with the small round hole on top. Ensure that the ring sits flat on the ledge of frames E, F, and G, with as small a gap as possible, then secure the ring by running thin CyA along the joints.

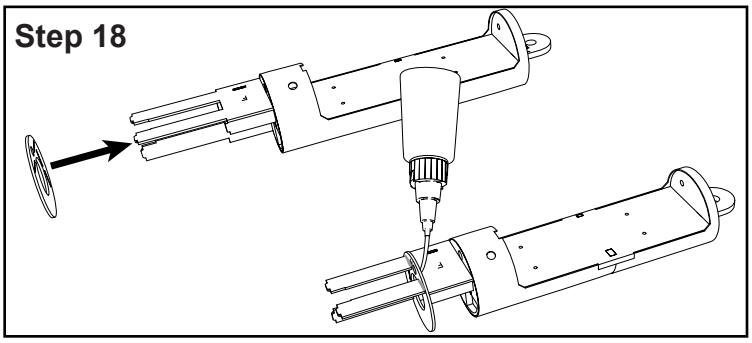

19. Dry assemble the ebay assembly and the motor tube assembly by sliding the motor mount tube into the hole in ring H and aligning the tabs at the end of frames F and G in ring J. Once the two assemblies are correctly aligned, secure them together with thin CyA along the tab joints in ring J and around the motor mount tube at ring H.

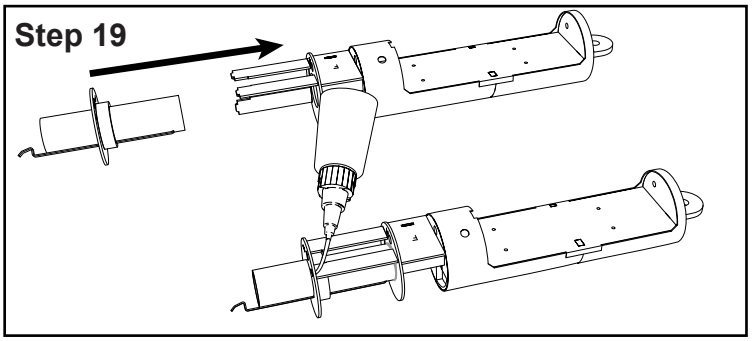

20. Slide the igniter tube (the 4mm straw) through the holes in rings C, H and J until the tube is flush with the back ring, and secure it into place with thin CyA at the rings.

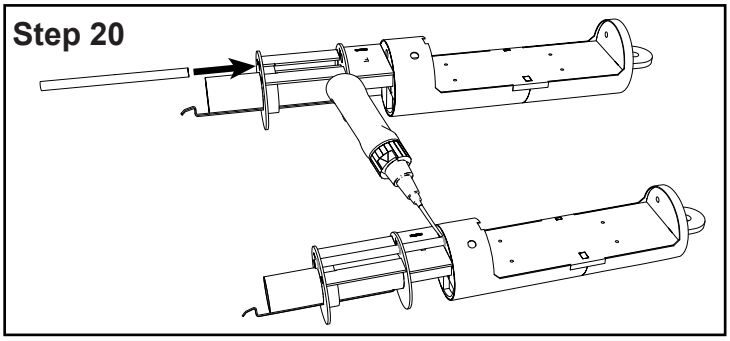

21. The nose cone and transition used in this kit come as a single piece. To separate the two parts, simply apply pressure between them with a quick bending motion. The nose cone will be used as it is. The transition requires slight modification for use in the kit.

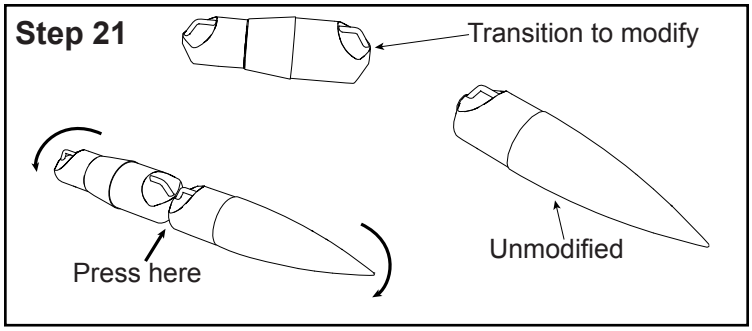

22. Using a razor saw, cut along the indentation in the large end shoulder of the transition to remove the end. If the cut is rough, sand the edge with medium grit (220 grit) sandpaper.

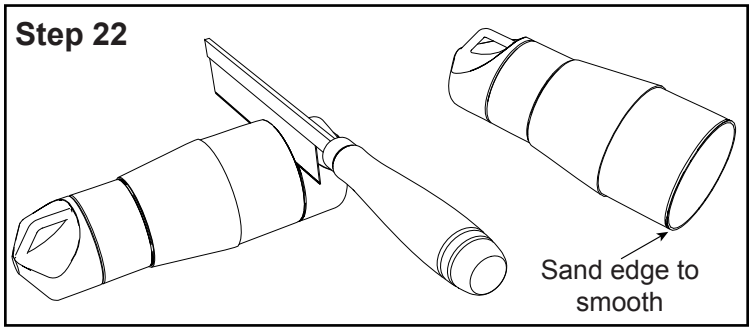

23. Using a sharp hobby knife, cut the tabs to separate the sustainer tube into the upper tube (the long piece) and the fin can tube (shorter, with the three fin slots). Set the upper tube aside for the moment.

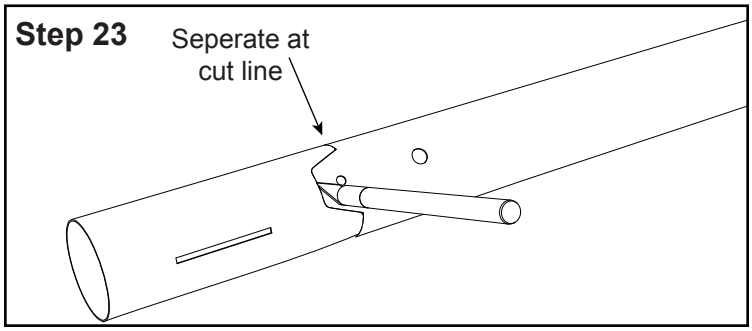

24. To ensure the smoothest reliable separation of the stages, harden the aft end of the fin can tube by applying an ample coat of thin CyA adhesive to the interior of the tube, between the uncut (aft) end and the fin slots. If there are any puddles of adhesive, wipe them off quickly using a paper towel and allow the adhesive to harden before continuing.

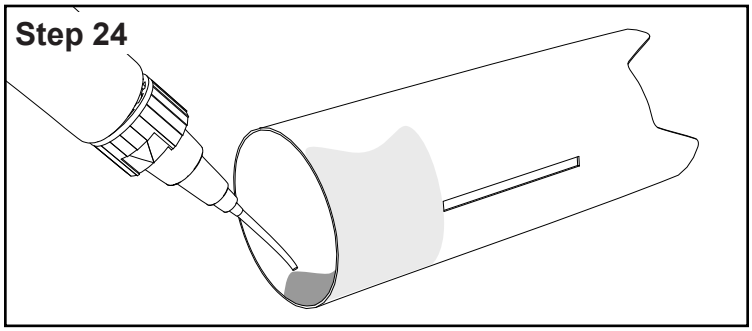

25. Once the adhesive has hardened in the fin can tube, adjust the fit between the tube and the transition shoulder. Lightly sand the tube and transition so that the transition will slide out under just its own weight. Doing so will allow the rocket to drag separate during flight. Once the transition fits nicely, it can be set aside for the booster build.

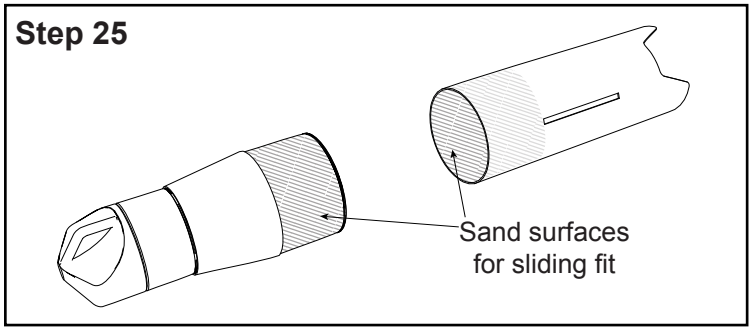

With the assembled ebay and motor mount, the final alignment of the sustainer is fairly simple. The installation of this core assembly is somewhat unusual however. Most of the strength of the assembly against thrust loads comes from the gluing of the TTW (through-the-wall) fins rather than by gluing the rings into the tube directly. As such, the CyA glue that is used for installation need not be sufficient for anything beyond preventing the parts from slipping, and may be used sparingly.

26. The upper tube is now used to correctly align the motor mount and ebay in the fin can tube. Slide the upper tube onto the ebay until the aft end of the coupler is flush with the back end of the cut side of the tube, lining the holes up. Insert the base of one of the removable rivets (the full two-piece rivet is not needed at this point) to hold it temporarily in place.

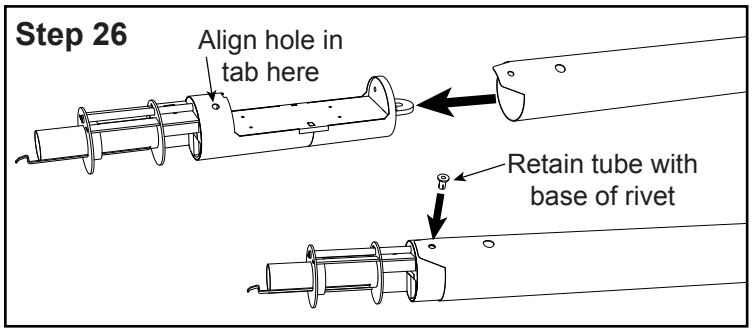

27. Slide the motor mount assembly (with the ebay and attached upper tube) into the cut end of the fin can tube and align everything so that any gap between the upper and lower tubes is uniform around the joint. Tack the motor mount assembly into the fin can tube by applying a small amount of thin CyA to the aft centering ring/tube joint. This glue does not provide the final strength for flight loads, so complete coverage is not required.

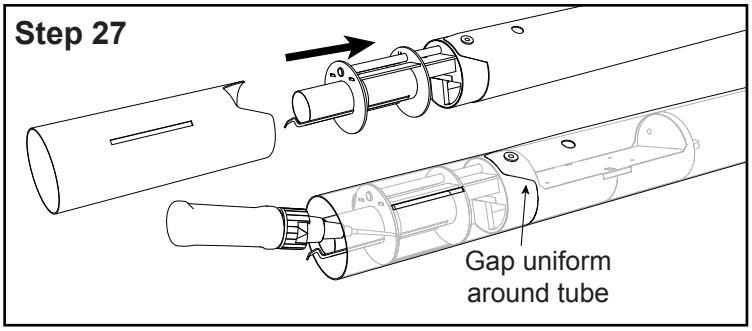

28. Once the adhesive hardens enough to hold the motor mount assembly in place, remove the rivet base, and slide the upper tube off. Apply a bead of thin CyA to the joint between the fin can tube and the red ebay coupler. Allow the adhesive to harden before continuing.

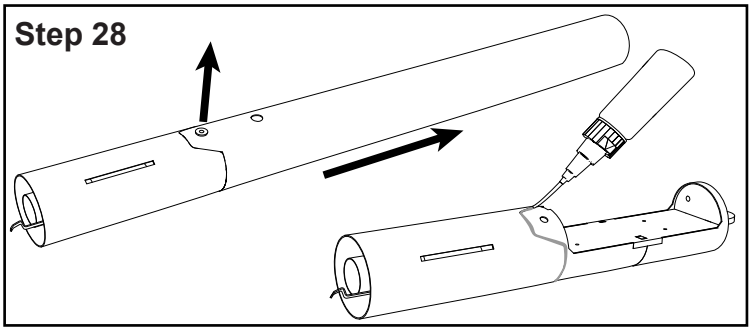

As mentioned previously, the fins are where most of the thrust load is carried, so it is important that they be well secured in this step. The combination of basswood fins with large contact areas on the centering rings and motor mount tube make achieving sufficient strength fairly simple.

29. Sand both sides of the fin sheet (sustainer and booster fins) with a fine grit (320 grit) sandpaper before removing the fins from the sheet using a sharp hobby knife.

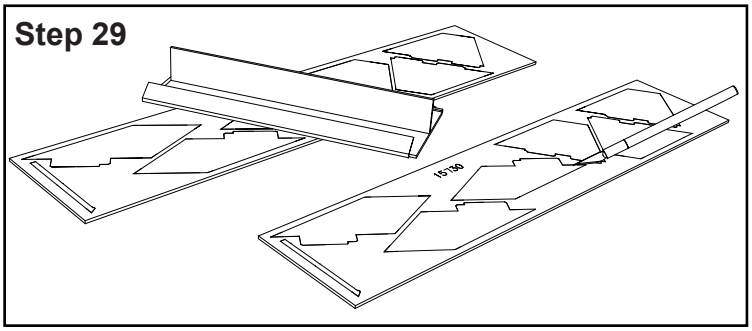

30. Sand the edges of the fins to remove any remnants from the sheet. This can be done easily by stacking the fins together and sanding all at once.

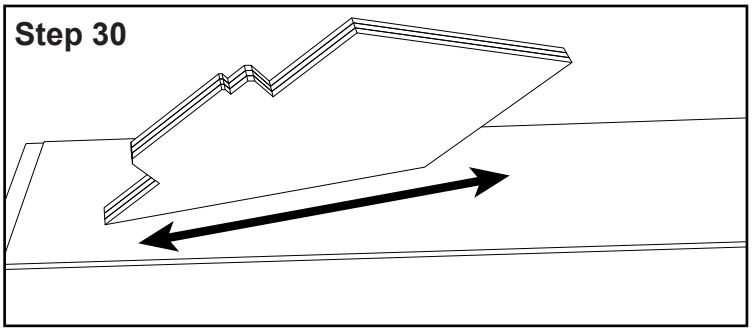

31. **WITHOUT GLUE**, test fit each sustainer fin and trim the through-the-wall tab if necessary to fit tightly into place with the entire root edge of the fin flush against the tube.

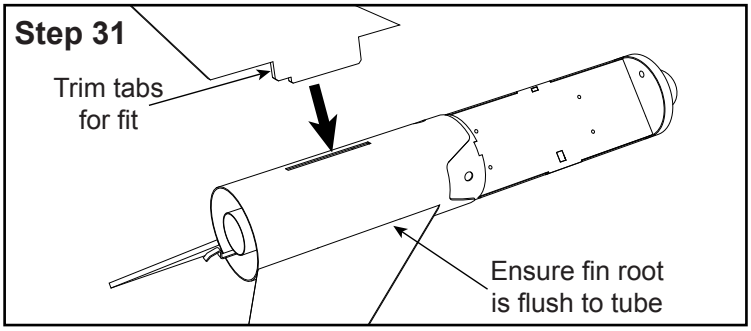

32. Once the fit of the fins has been checked, attach the fins into the slots using wood glue. Apply glue to the entire bottom edge of the fin as well as the front and back of the tab. Insert through the slot and align perpendicular with the body tube. For even better alignment, a fin alignment guide (such as P/N 35546) can be used.

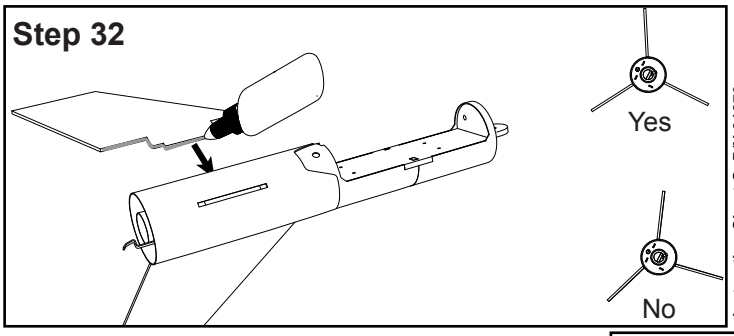

33. Run a line of wood glue along one of the included 1/4” x 3” launch lugs, and secure it onto the upper body tube at the engraved location, making sure to align it carefully.

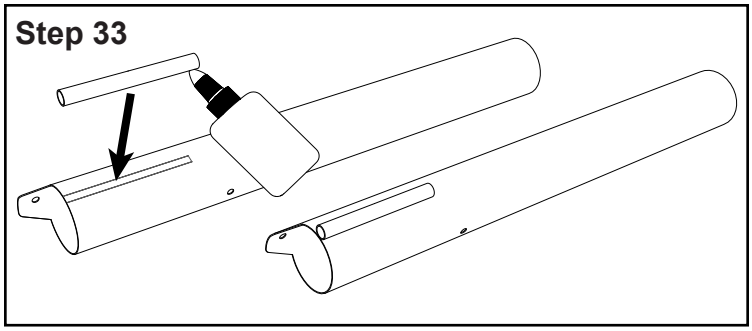

34. Allow the glue on the fins and launch lugs to dry, then apply fillets to each by applying a bead of wood glue at the joint and shaping the fillet with a finger tip. Allow the fillets to dry.

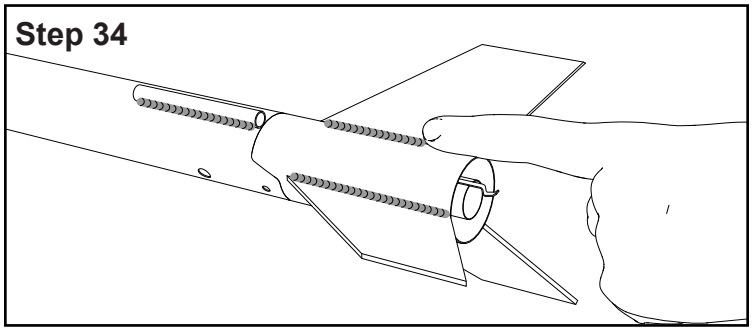

The remainder of the physical assembly for the sustainer consists of installing the recovery system and the electronics.

35. Tie loops that are a minimum of 2” long at both ends of the thicker (300#) Kevlar shock cord. The loops should be large enough that the nose cone will fit through them comfortably. Once the loops are tied, wrap tape around the tails to prevent the knots from untying.

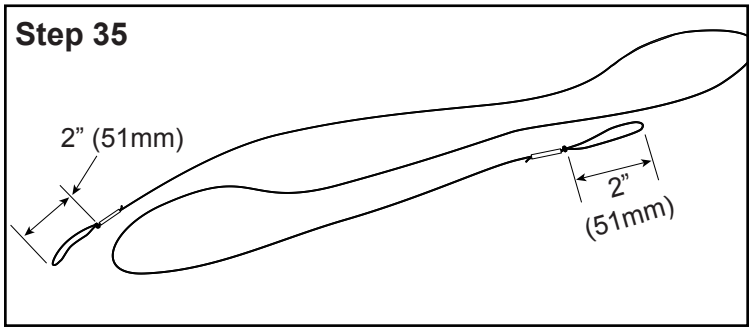

36. Attach the shock cord to the loop on the Ebay by passing one of the ends through the hole on the Ebay and then passing the remainder of the shock cord through the exposed loop. Pull the shock cord tight.

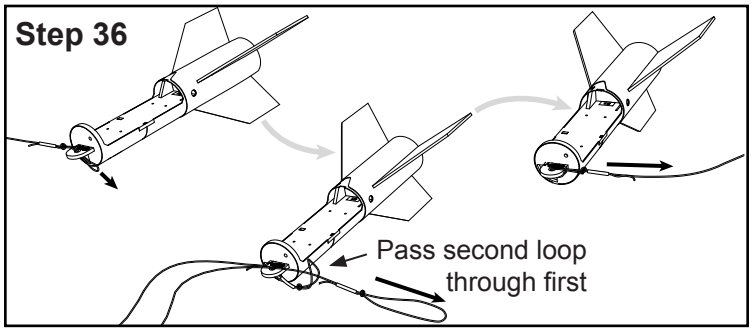

37. Thread the loose end of the shock cord through the upper tube, then attach the shock cord to the nose cone in the same way as the last step. First, pass the end through the loop on the nose cone. Then, pull the loop over the tip of the nose cone and pull the shock cord loop down over the cone. Pull the shock cord tight.

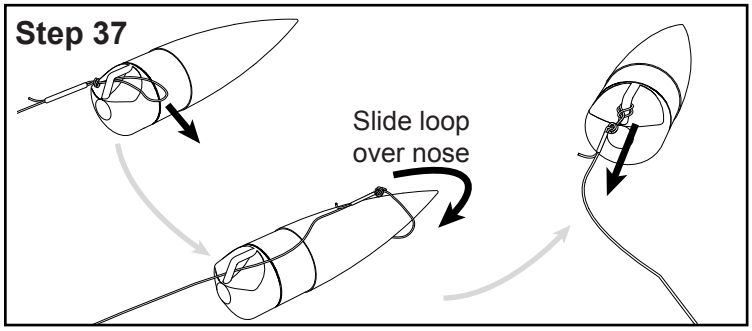

38. Attach the 18” parachute to the sustainer nose cone by gathering the shroud lines and passing them through the loop in the nose cone. Route the parachute through the loops created by the shroud lines and pull the strings tight.

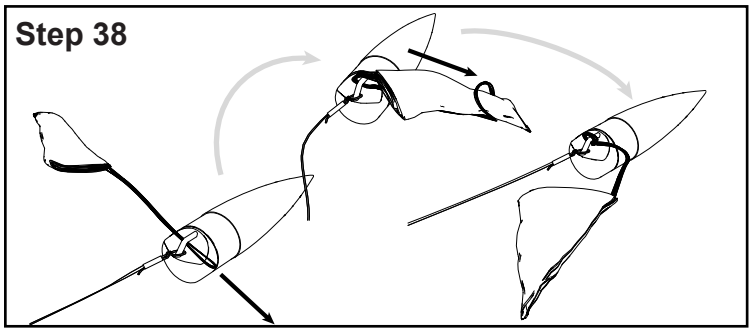

39. Optional: The TTV kit comes with pre-drilled Simple Timer (P/N 09142) mounting holes. If other electronics are to be used, new holes will need to be drilled. To do so, transfer the location of the holes by placing the electronics (or a marking guide) in the desired location and marking the hole center with a pencil. Drill the holes with the appropriate tap drill (#50 for 2-56 screws or #43 for 4-40 screws)

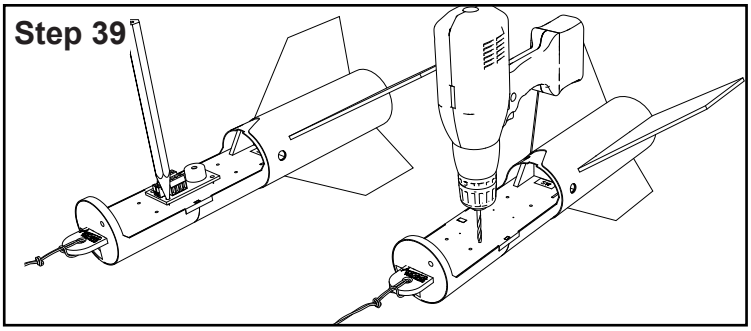

40. Optional: The Simple Timer comes with wood screws so tapping of the holes is not required. If other electronics are being used or different hardware is desired, tap the mounting holes using the appropriate tap, then harden the holes by dripping thin CyA adhesive into each tapped hole.

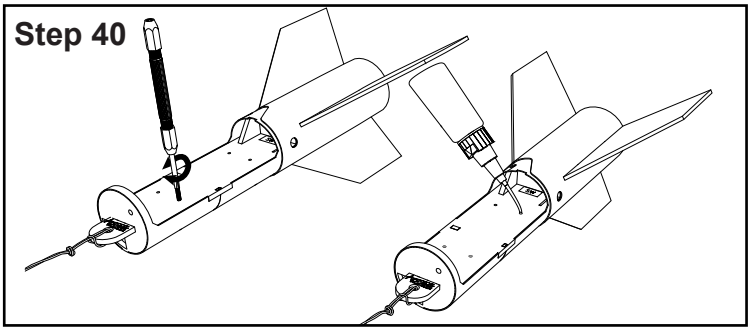

41. Use medium or extra thick CyA adhesive to glue the included switch into place. Take care to avoid glue getting into the mechanics of the switch and align the switch so that the plunger is easily reached through the hole on the side of the body tube. Apply a couple of small drops of adhesive to the body of the switch and place on the etched location. Then hold it in place until the adhesive hardens.

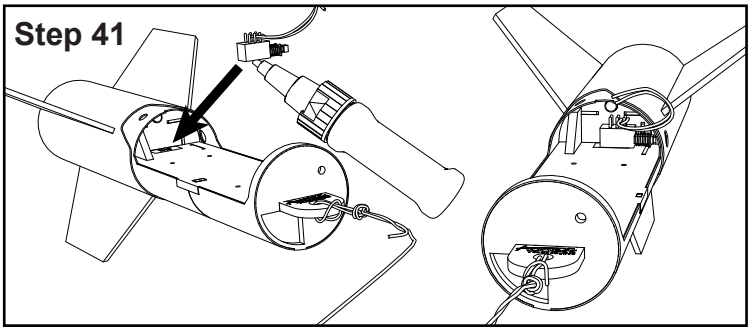

42. Mount the electronics to the Ebay sled using the manufacturer's hardware, then wire according to the manufacturer's instructions.

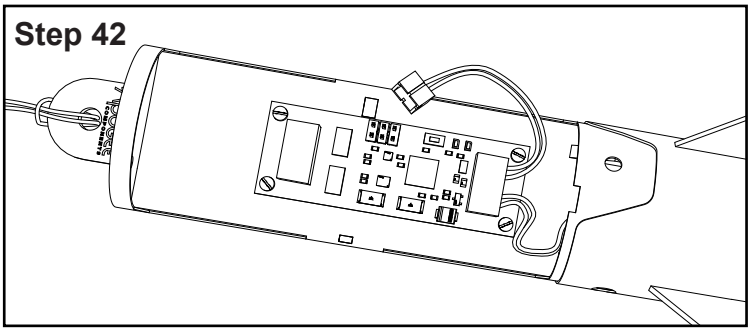

43. Mount the battery with a single wrap of tape around the battery and coupler (masking tape works fine but a thin mylar tape is even better, or use velcro tape strips like Apogee P/N14269 for easy removal). If the tape covers the rivet hole on the bottom side, simply puncture the tape to allow the rivet to pass through.

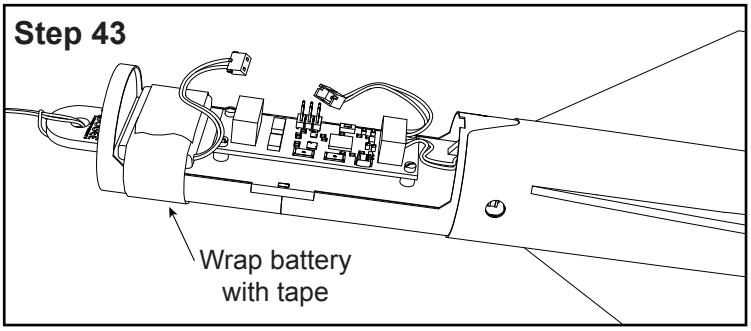

Booster Assembly Steps

44. Using the tip of a hobby knife, cut a 1/8" (3mm) wide slot, 1/4" (6 mm) from one end of the 24mm/3.75" motor mount tube. This will be the front end of the booster motor mount tube. Also, use a pencil to mark 3/4" (18mm) from the aft end of the tube.

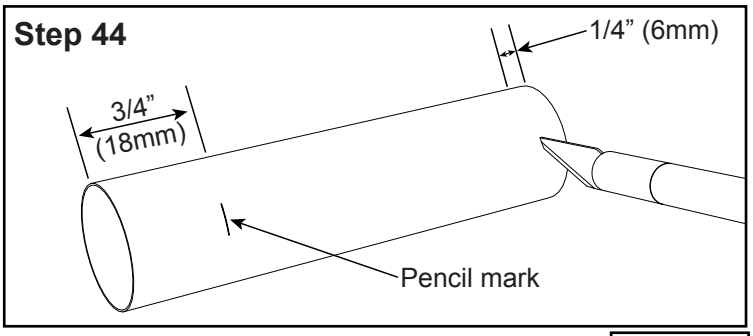

45. Remove the two L rings from the plywood sheet, then install the motor hook with its right angle tab in the slot, and the crimped end hangs off the back of the tube. Make a ring of wood glue just forward of the mark and slide one of the L rings onto the tube into the glue, leaving 3/4” (18mm) of the tube exposed at the back.

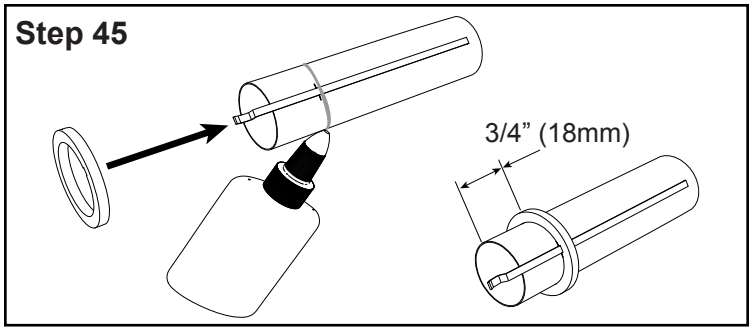

46. Tie the thin (100#) Kevlar shock cord around the center of the motor mount tube.

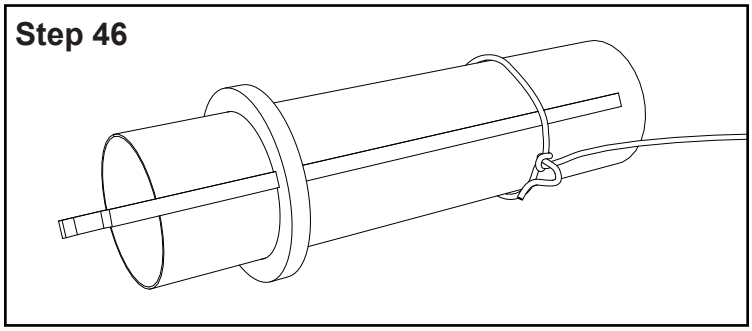

47. Pass the shock cord through the second L ring. Make a ring of glue just forward of the slot, and slide the L ring onto the motor mount tube with the shock cord passing next to the motor hook in the notch. Ensure that the front of the ring is 1/4” (6 mm) from the end of the tube. It is recommended that you test fit the booster fin tabs between the two rings, and slide the front ring if needed to ensure the fin tabs fit between the rings

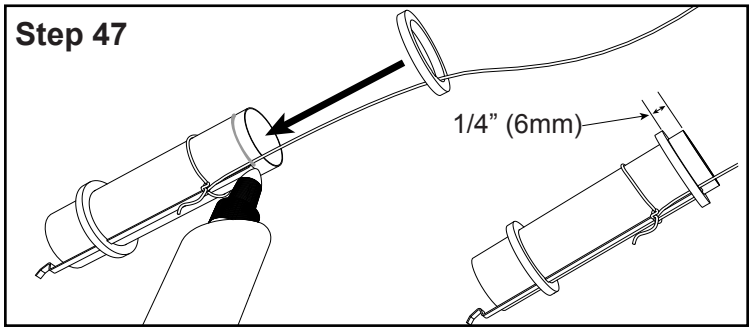

48. Pull the shock cord so that it sits tight against the back of the forward centering ring and apply a fillet to secure the shock cord into place.

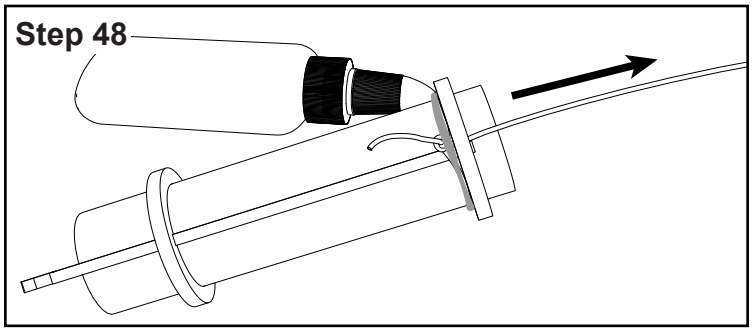

49. Apply a ring of glue inside the forward end of the motor mount tube and install the green CR-18/24 engine block flush with the end of the tube. Allow the glue on the motor mount assembly to dry.

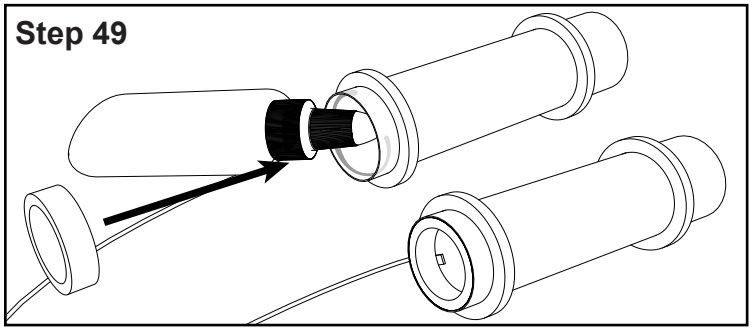

50. Pass the shock cord back through the motor mount assembly you just built, so that the cord sticks out the back of the tube. Then apply a ring of wood glue inside the booster body tube (33mm x 7.5”) in line with the front edge of the front slots. Push the motor mount assembly into the tube, making sure that the motor hook sits between two of the fin slots, and insert until the aft centering ring is flush with the aft edge of the booster tube.

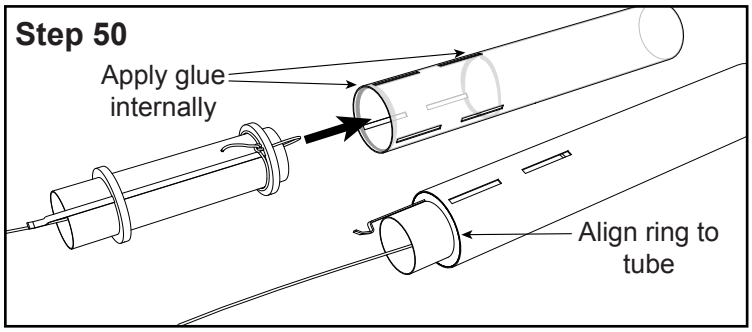

51. Take the booster fins, sand the edges smooth if needed, and test fit the fins in the booster. Trim the tabs if necessary for them to fit flush with the tube.

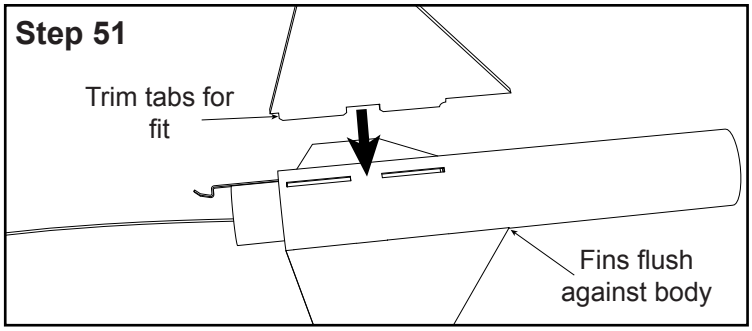

52. Apply wood glue to the base of each fin and insert them in the slots, being careful to ensure that they are perpendicular to the rocket body. As with the sustainer fins, use of a fin alignment jig (such as P/N 35539) is recommended to ensure accurate alignment. Allow the glue to dry.

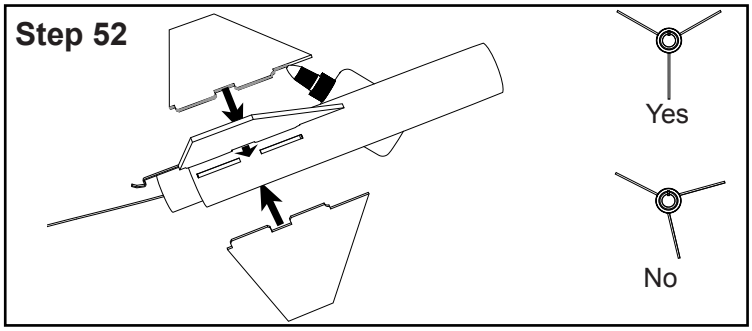

53. Using a hobby knife, carefully remove the launch lug standoff from the basswood fin sheet. Until it is glued into place, the standoff is fragile, so handle it carefully (this is due to the grain direction, the wood is quite rugged once installed). Sand off any remnants of tabs allow the standoff to seat firmly against both the booster tube and the launch lug.

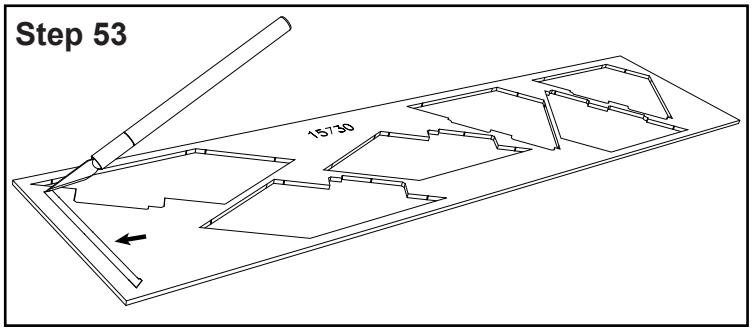

54. Apply a bead of wood glue to the thin edge of the standoff that has the small hook and mount the remaining launch lug, sliding it back up against the shallow notched area.

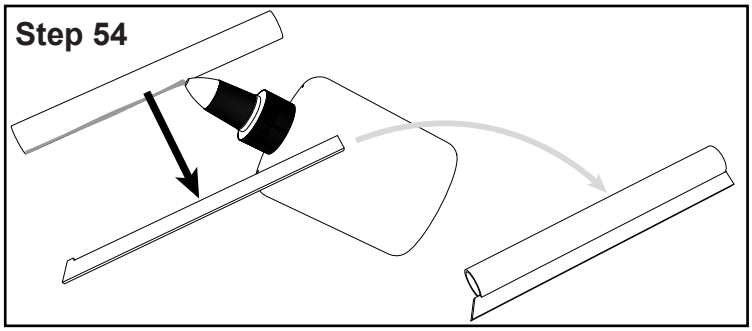

55. Glue the standoff and launch lug to the booster by applying a bead of glue along the base of the standoff (opposite the launch lug) and aligning the assembly with the engraved markings on the booster tube. For the best alignment of the booster and sustainer launch lug, ensure that the standoff points straight out of the tube like the fins do. Glue the standoff and launch lug to the booster by applying a bead of glue along the base of the standoff (opposite the launch lug) and aligning the assembly with the engraved markings on the booster tube. For the best alignment of the booster and sustainer launch lug, ensure that the standoff points straight out of the tube like the fins do.

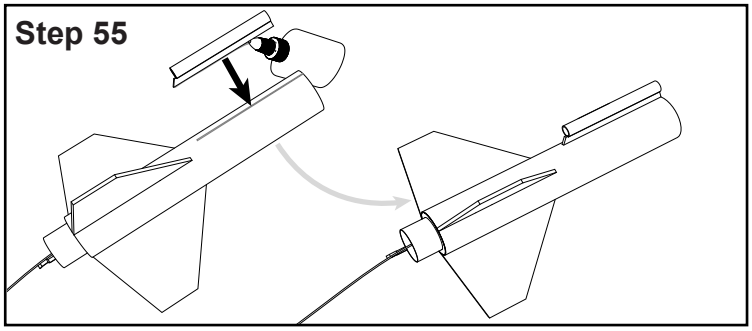

56. Once the fins and launch lug are securely mounted to the booster, apply fillets to the root of the fins as well as the launch lug and standoff by applying a bead of wood glue to the joint and shaping the fillet with a finger tip. Allow the glue to dry.

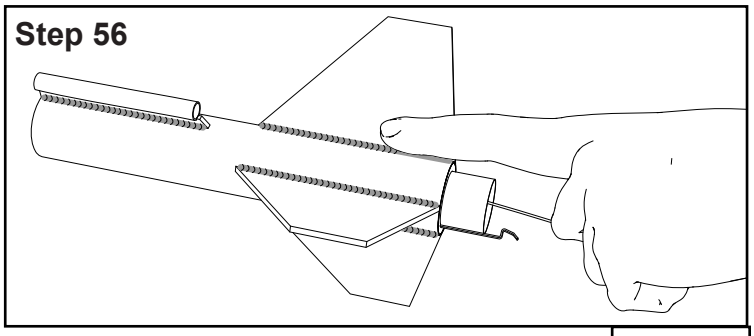

57. Remove the K disk from the cardstock sheet and insert it into the transition as far forward as it will go. Apply a bead of thin CyA adhesive around the edge.

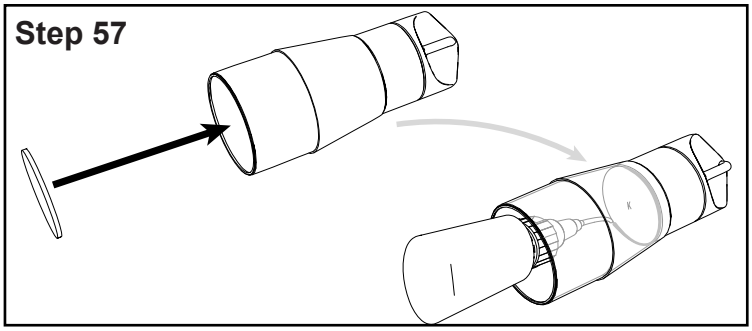

58. Pass the shock cord back through the motor mount tube and tie it onto the loop on the transition. Wrap the tail of the knot with tape to ensure the knot will not come undone.

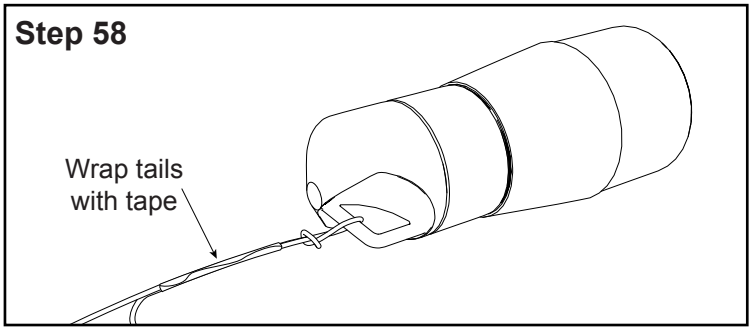

59. Attach the 12” nylon parachute to the transition by gathering the shroud lines together, passing them through the transition loop, then passing the parachute through the shroud lines and pulling them tight again. Load the shock cord and parachute into the booster and if necessary, add tape to the shoulder on the transition to ensure that the transition is a snug fit into the booster, to prevent unwanted separation during boost.

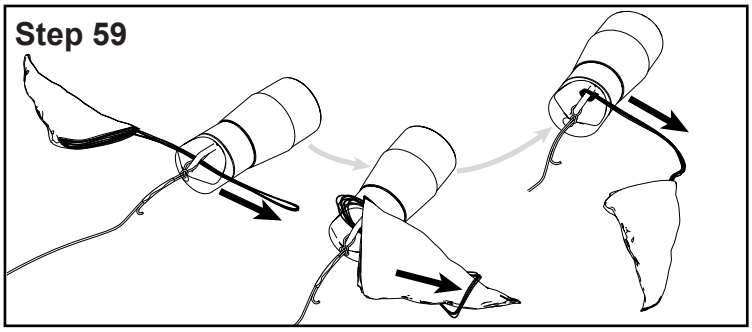

Overall Finishing

60. Temporarily assemble the rocket in order to prime and paint. See the Rocket Preflight section at the end of the instructions for a detailed explanation of how to do this, if needed.

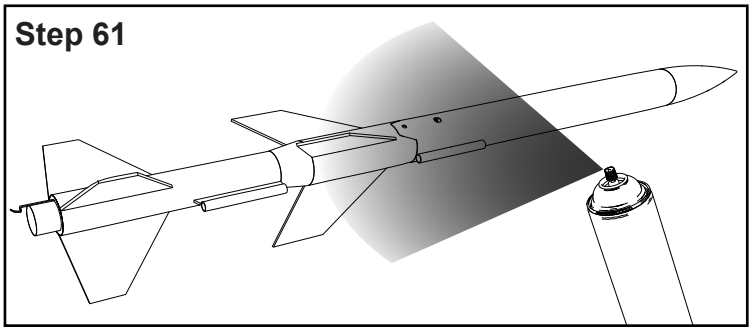

61. For the absolute best finish, it is important to apply primer. Prime and sand the rocket (using fine sandpaper, 400 grit) to fill any surface imperfections, then spray the rocket with a coat of the desired color of paint following the paint manufacturer’s directions.

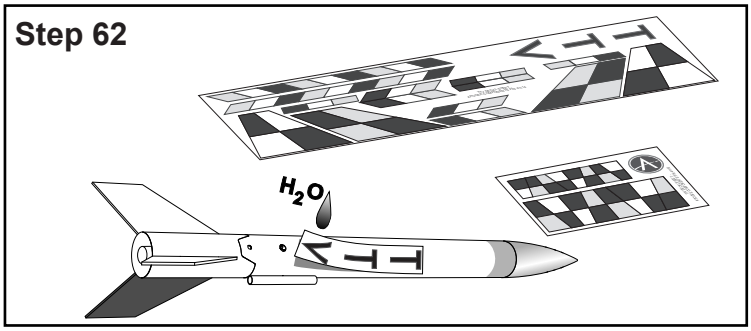

62. Allow the final coat of paint to dry at least 24 hours before applying the vinyl decals so that the paint isn’t damaged. Remove each decal from the paper backing and apply soapy water to the back of them so that the decal slides easily on the surface of the painted rocket. If the decal begins to stick before it is correctly positioned, a little water can be added to the surface. Position the decals on the rocket and once they are in the correct location, press them down firmly and squeegee out any water underneath them. Once they dry entirely, the soapy water will not affect the adhesion of the decals on the rocket.

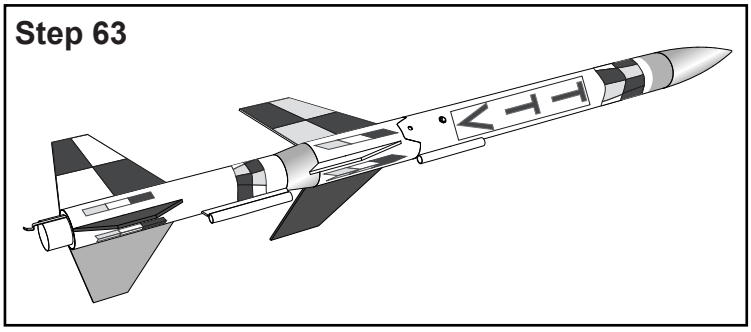

63. **Congratulations**! Your TTV is completed and ready to fly!

Launch Supplies Needed
To launch your rocket you will need:

- ☐ A launch pad with a 1/4” (6mm) launch rod and a launch controller that can handle the selected igniters
- ☐ Recovery Wadding
- ☐ Engines such as those recommended in the motor chart. Additional motors can be viewed at: https://www.apogeerockets.com/Model-Rocket-Kits/Skill-Level-4-Model-Rocket-Kits/TTV#motors

Single Stage

Motor	Manufacturer	Est. Altitude		Type
		Ft	m	
C5-3	Estes	253	77	Single Use
C12-4	Quest	441	134	Single Use
D20W-6	Quest	713	217	Single Use

Two-Stage

Motor 24/18mm	Manufacturer	Est. Altitude		Type
		Ft	m	
C11-3/B6-4	Estes/Estes	423	129	SU/SU
D12-3/C6-5	Estes/Estes	1015	309	SU/SU
D22W-4/C6-5	Quest/Estes	1275	389	SU/SU
D22W-4/C18-W8	Quest/Quest	1311	400	SU/SU
D22W-4/D13W-7	Quest/Aerotech	1877	572	SU/RMS
D22W-4/D16-8	Quest/Quest	1432	436	SU/SU
E35W-5/D20W-8	Quest/Quest	2386	727	SU/SU
F39T-4/D13W-7	Aerotech/Aerotech	3005	916	RMS/RMS

SU=Single Use RMS=Reloadable Motor System

Rocket Preflight:
It should be noted that the sustainer can also be flown in a single-stage configuration either with electronic ejection or simply using motor ejection. The preparation of such flights is not covered separately in this instruction booklet, but it can be done in much the same way with the major change being to skip any steps related to the booster and staging timer channel.

A. Install a fully charged battery and configure the electronics to fire the sustainer motor at the appropriate time. Generally, setting the electronics to fire the upper stage at roughly the same time that the booster motor burns out is a good initial delay setting. Alternate settings that more closely match the desired flight profile can be determined through simulation. Check that the electronics are working correctly and only fly when they are known to be reliable. BEFORE PREPARING THE ROCKET, MAKE SURE THAT THE POWER IS OFF!

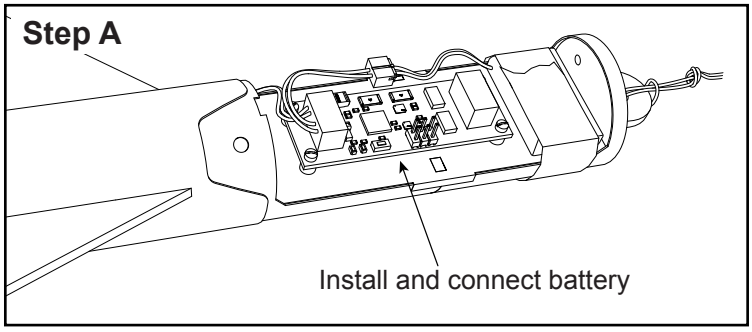

B. Crumple and insert 3 or 4 sheets of recovery wadding into the booster tube, then push the wadding down to the bottom of the tube with a dowel.

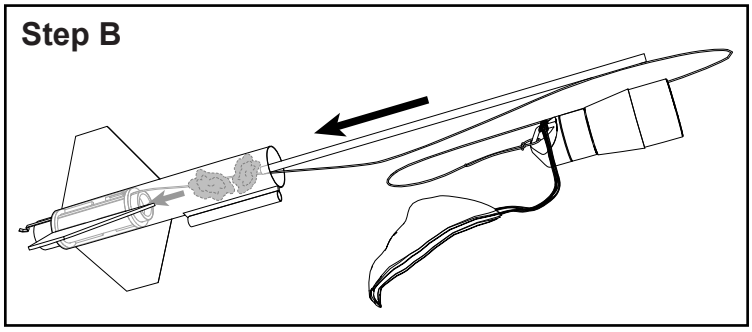

C. Fold the booster parachute so that the shroud lines all come together, then place the shroud lines onto the parachute in a loop and fold the parachute in half long ways to surround the shroud lines. Fold the parachute again – this time the other way – to shorten the whole package.

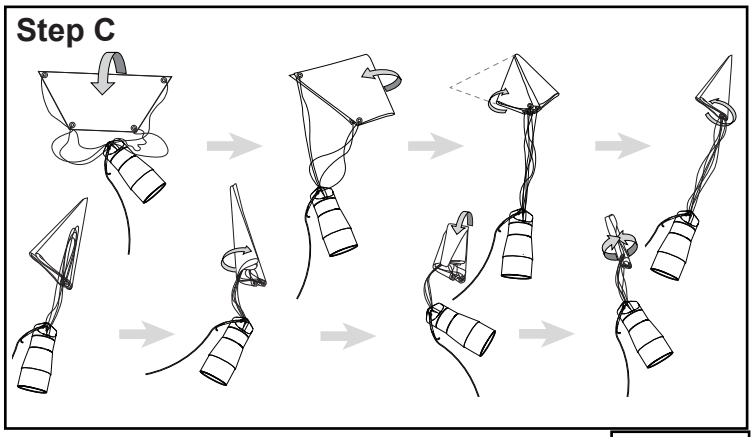

D. Loosely fold the shock cord and insert it into the booster body tube, followed by the folded parachute, and the transition/interstage coupler.

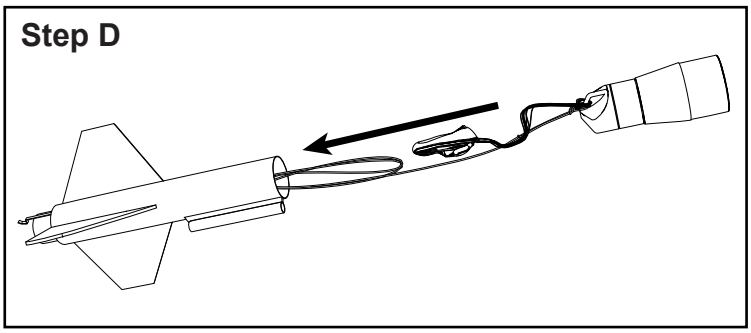

E. Install a motor into the booster by sliding it into place and securing the engine hook around the end. If using a short motor without a thrust ring (such as an Estes C or D), slide a spacer in before the motor to prevent the motor from sliding forward within the tube. No spacer is required for motors with thrust rings. With the motor installed, the booster is ready.

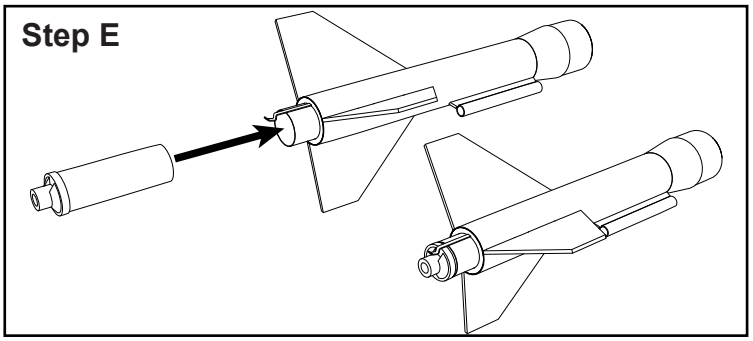

F. Install a motor in the sustainer by sliding the motor into place and securing the engine hook.

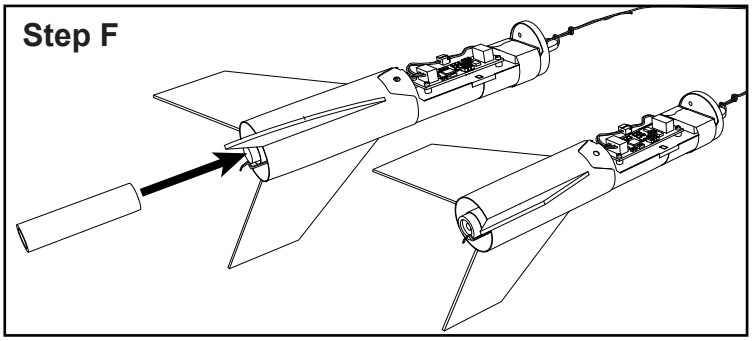

G. When flying in a two-stage configuration, the upper-stage igniter is installed at this point. If the appropriate igniter is not long enough to reach the pyro output on the electronics, the igniter should be extended by attaching lengths of scrap wire onto the end of each lead and protecting the joints with tape. Install the igniter into the motor - retaining it with an appropriate plug or tape - and route the leads through the igniter tube up into the ebay. Secure the igniter into the staging (timer) output.

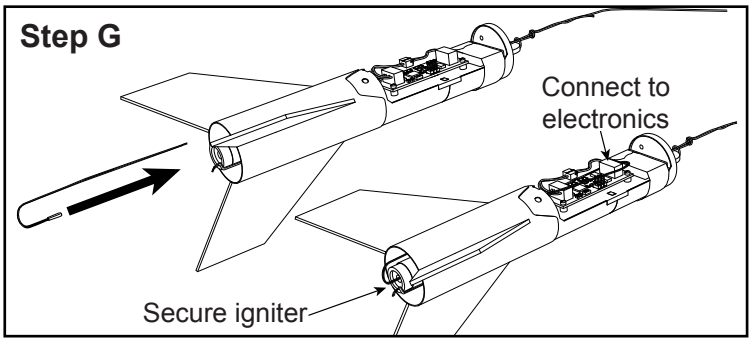

H. Create a deployment charge by cutting the end off of a finger from a latex glove. Fill it with an appropriate amount of black powder (0.5g is a good baseline, but an online charge calculator can give a more accurate result) then insert an e-match into the fingertip and apply tape around the open end to seal it.

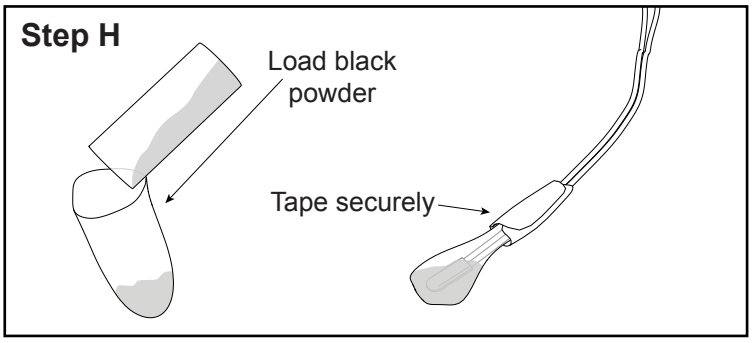

I. From the forward end, route the igniter leads through the forward ebay bulkhead and secure the igniter into the deployment output.

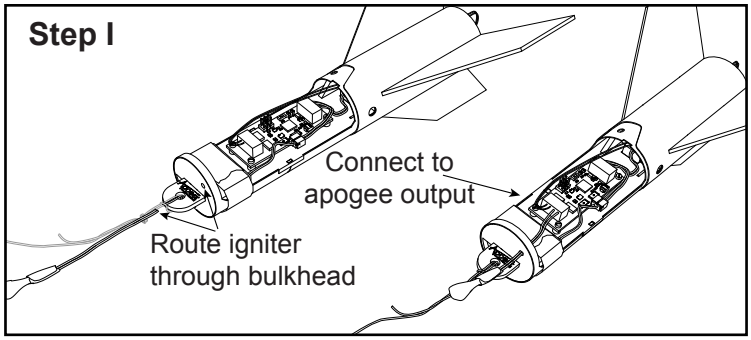

J. Slide the upper tube over the Ebay and secure into place by installing the two removable rivets. Push the base pieces into the holes first, then install the plungers. To remove them, reverse the process.

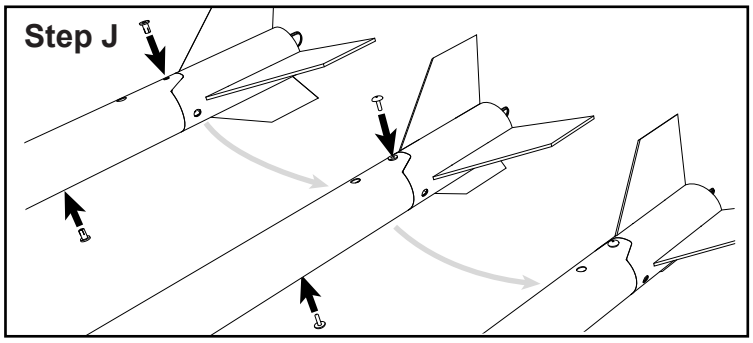

K. Crumple and insert 3 or 4 sheets of recovery wadding into the sustainer tube, then push the wadding down to the bottom with a dowel. Take care not to damage the apogee charge while doing so.

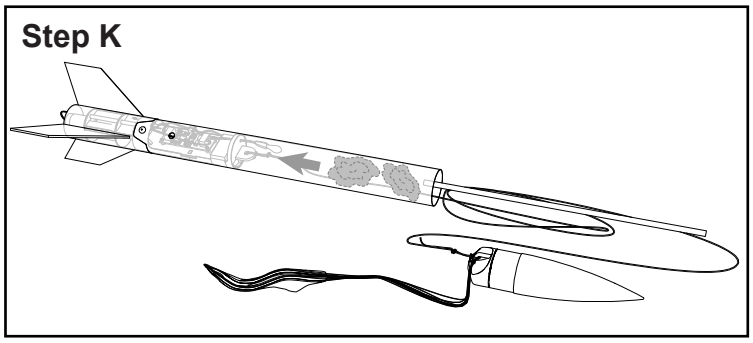

L. Fold the sustainer parachute in the same manner as the booster parachute was folded. Fold it so that the shroud lines all come together, then place the shroud lines onto the parachute in a loop and fold the parachute in half long ways to surround the shroud lines. Fold the parachute again – this time the other way – to shorten the whole package.

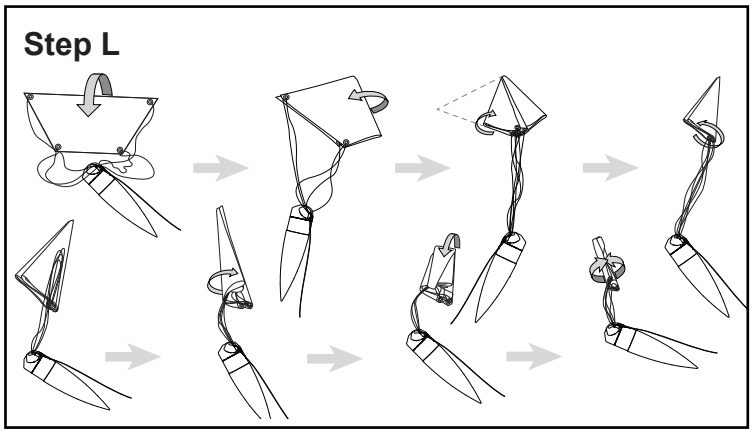

M. Loosely fold the shock cord and insert it into the sustainer body tube followed by the folded parachute and the nose cone. Slide the prepared booster onto the now complete sustainer. Ensure that the shoulder of the interstage slides easily into the sustainer with minimal slop. Adjust the fit with sandpaper (if too tight) or wrap tape around the shoulder (if loose).

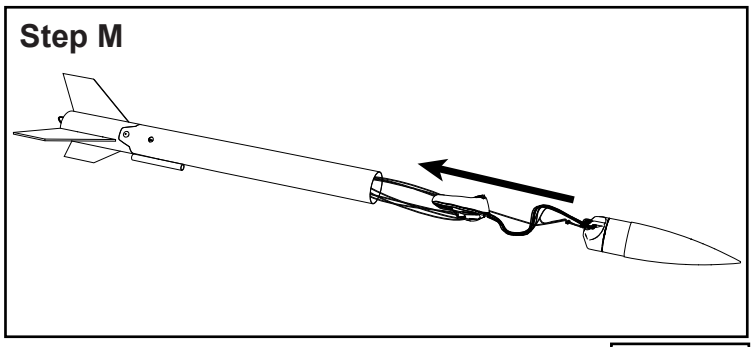

N. After taking the rocket to the pad, power up the electronics, check that they are functioning correctly, then connect the booster igniter.

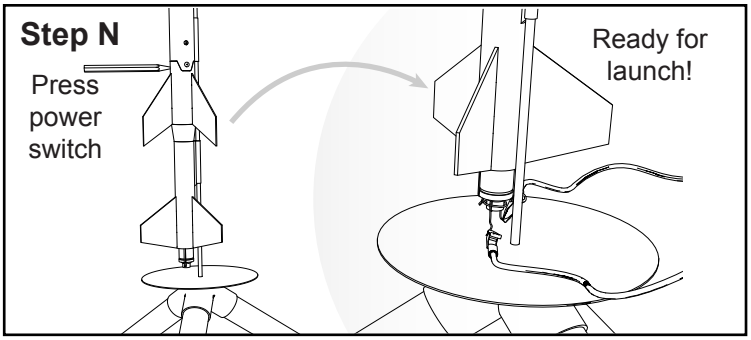

Continue to follow the countdown and launch procedures.

Countdown and Launch Procedure

The TTV is a fairly complex rocket – certainly for its size – but once the process to fly it is understood, it can be flown from large or small fields. To ensure that staging happens when the rocket is going very nearly straight up, the TTV should only be flown in low to moderate winds and ideally with a fairly high-thrust booster motor. With the two separate motors per flight it is even more important than usual that the area around the launch pad should be free from dry grass and other fire hazards and that the pad should be as far from trees, powerlines and low-flying planes as possible. Also despite its small size the TTV should be recognized as a complex rocket (as defined in the NAR High-Power safety code) and clearance distances increased over similarly sized rockets.

1. Remove the safety key from the launch controller if it has been stored there.
2. Place the rocket on the launch pad. The rocket should slide freely along the rod.
3. Attach the clips to the igniter wires. The clips must not touch either each other or the metal blast deflector. Otherwise, a misfire is likely.
4. Stand back from the rocket as far as the launch wire allows.
5. Insert the safety key to arm the launch system.
6. Give a loud countdown! 5… 4… 3… 2… 1… LAUNCH
7. Press and hold the button until the engine ignites. Once the rocket is away, remove the safety key.

Misfire Procedure

A misfire is when an engine does not light after the launch button is pressed. This is sometimes a result of the igniter burning but failing to light the engine. At other times, the igniter will not burn at all (this is often indicative of a short between the clips). To deal with a misfire safely, remove the safety key from the launch controller and wait a full minute (60 seconds) prior to approaching the pad. Check that the igniter wires or clips were not touching and causing a short. If they were, the short can be corrected and a launch attempted again. If the engine simply failed to light, remove the old igniter and install a new one. Make sure that the igniter is installed all the way into the engine and that it is in contact with the propellant. Always follow the NAR (National Association of Rocketry) Model Rocket Safety Code when launching model rockets.