Kit #05065 **Assembled In USA**
Skill Level 5

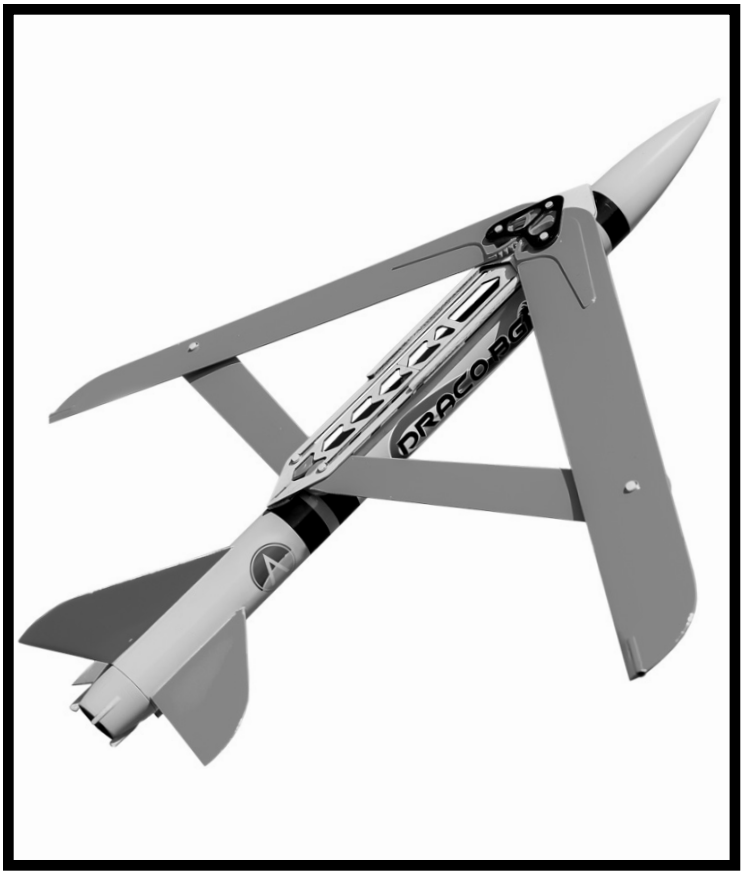

Skill Level 5

Extremely Challenging

The Draco BG is a model boost glider (BG) based on the real-life Boeing GBU-39 SDB (Small Diameter Bomb) which originally was an air-drop ordinance and was later modified for launching from ground vehicles. This modified version is known as the GLSDB (Ground-Launched Small Diameter Bomb) and is a precision weapon system that allows delivering a payload of 93kg (205 lbs) to a location within a range of 150 km (93 mi) from the mobile launch platform. Development of the GLSDB was a joint project of Boeing and the Saab Group. The Draco BG copies the overall configuration of the GLSDB and the unique folding wing arrangement.

Despite the fancy wing mechanism, flights of the Draco BG model are simple. It launches upward on 24mm diameter rocket motors. The simple interstage/wing-lock system ensures reliable transition of the upper stage to glide configuration while the booster recovers under a parachute. While a challenging build, the Draco BG is a fantastic rocket for those interested in mechanical design, gliders, and military history.

Needed Tools and Materials

- ☐ Hobby Knife with Sharp Blades
- ☐ Scissors
- ☐ Razor Saw
- ☐ Wood Glue
- ☐ Thin CyA Adhesive
- ☐ Medium CyA Adhesive
- ☐ Masking Tape
- ☐ Medium and Fine Sandpaper (180, 320 grit)
- ☐ Aluminum Angle
- ☐ 4-40 Tap

Draco BG Parts List

Item #	Item Name	Qty
10091	AT-24/3.75” (Motor Tube)	1
10151	AT-41.6/9” (Booster Tube)	1
10154	AT-41.6/18” LC (Fuselage Tube)	1
12976	#4 Flat Washer	4
12977	#4 3/16”x1/4” Unthreaded Off-White Nylon Standoff	5
12978	#4 3/16”x5/32” Unthreaded Off-White Nylon Standoff	2
12979	4-40 x 1/2 Black Nylon Panhead Screw	7
13031	CR-18/24	1
13035	CR-24/29	1
13123	AC-41.6/1.5” LC	1
13051	1/8" Launch Lug 1" Long	2
13056	1/4" Launch Lug 3" Long	2
14263	1/8" x 2.5" Wood Dowel	2
15015	CR-24/41.6 Cardstock (Rectangle)	1
15487	Draco BG Jig Sheet Cardstock	1
15488	Draco BG Parts Sheet A 1/8”x4” Balsa	1
15489	Draco BG Parts Sheet B 1/8” Ply	1
15490	Draco BG Parts Sheet C 1/16” Ply	1
15731	Draco BG Wing Sheet 1/8”x4” Balsa	2
15732	Draco BG Fin Sheet 1/8”x4” Balsa	1
15733	Draco BG Stabilizer Sheet 3/32”x4” Balsa	1
19469	PNC-41mm (BT-60)	1
24003	#117B Rubber Band	1
24044	Crimped "E-size" Engine Hook	1
29090	12" Printed Nylon Parachute	1
29518	100# Kevlar x 5 feet	1
29600	Clay Nose Wt 5g	1
31271	Instructions Sheet A	1
31272	Instructions Sheet B	1
31273	Instructions Sheet C	1
31274	Instructions Sheet D	1
31275	Instructions Sheet E	1
31278	Instructions Sheet F	1
39059	Face Card	1
41116	Decal Sheet	1

Optional Tools / Finishing Supplies

- ☐ Fin Alignment Guide (P/N 35546)
- ☐ Flat Needle File
- ☐ Wood Filler
- ☐ Sanding Sealer
- ☐ Extra Fine Sandpaper (600 grit)
- ☐ Spray Paint
- ☐ Wood Dowel
- ☐ Ruler or Calipers

Manufactured in the USA by:
Apogee Components Inc.
Colorado Springs, Colorado, USA
www.ApogeeRockets.com

Instruction Sheet A: P/N 31271 *Updated 9/1/2023

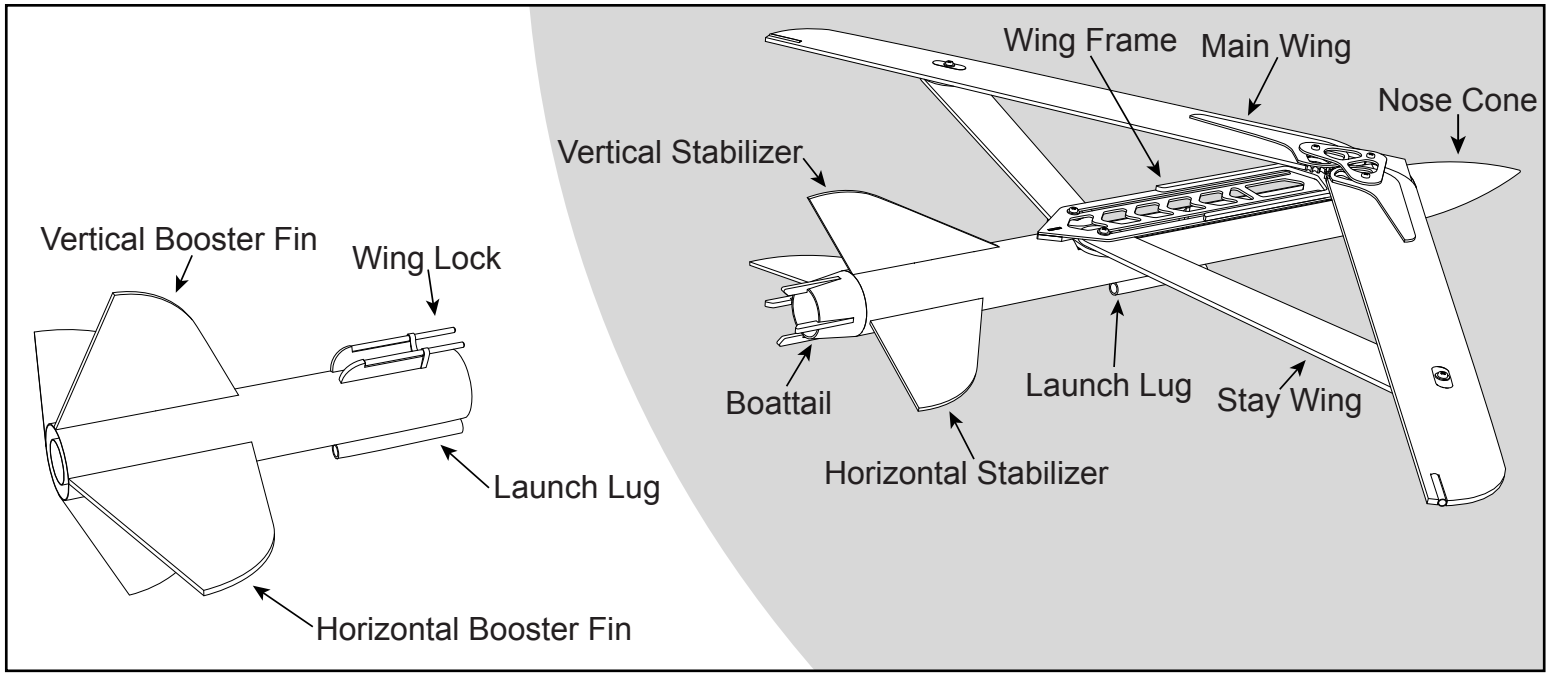

This image outlines the basic nomenclature used in this instruction booklet for major parts of the Draco BG. Additional exploded views of the more complicated assemblies are included later.

Assembly Booster Steps

1. Mark the motor mount tube (AT-24/3.75”) with a pencil 1/2” (13 mm) from either end. Cut a 1/8” (3mm) wide slot, 1/4”(6 mm) from the front of the motor mount tube.

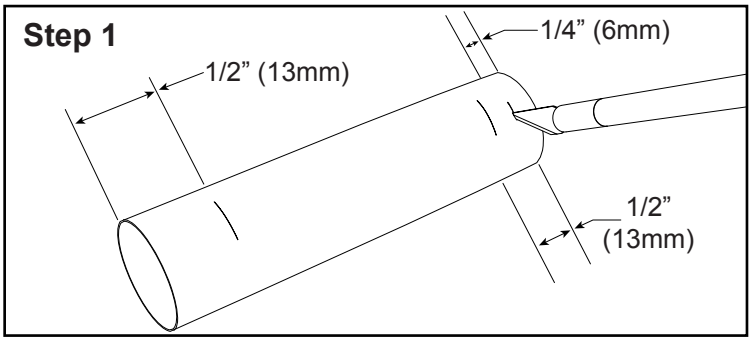

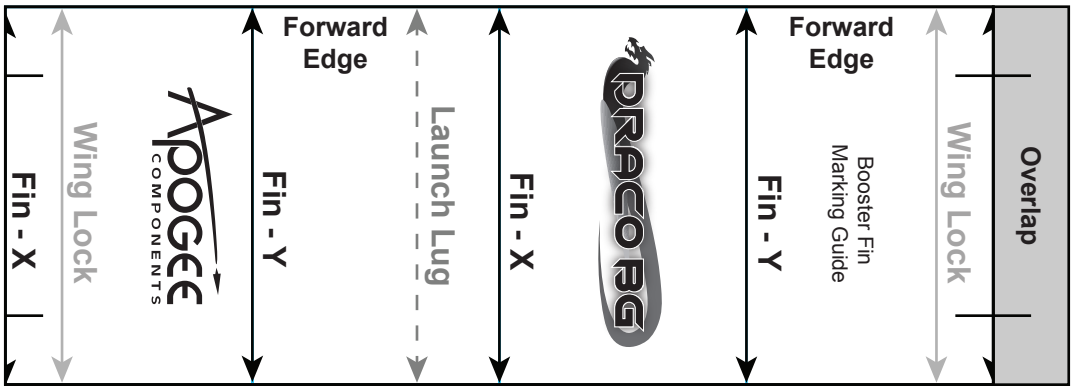

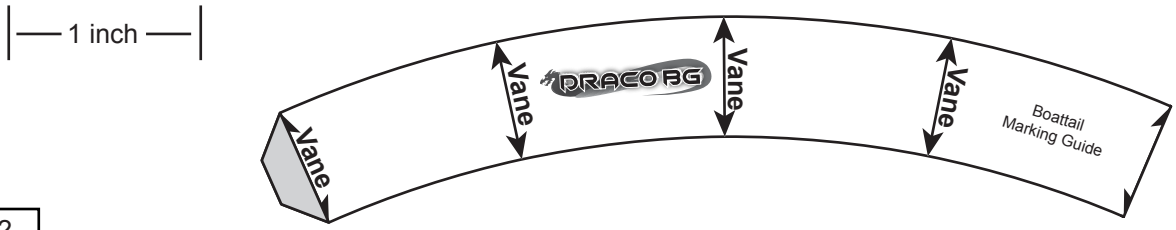

2. Using a sharp hobby knife, remove the two CR-24/41.6 centering rings from the small cardstock sheet (P/N 15015).

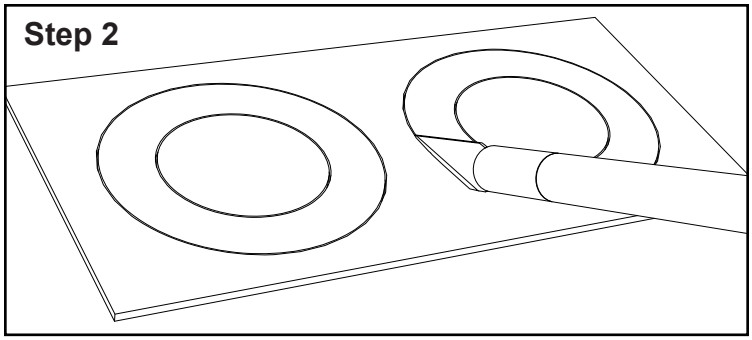

3. Install the motor hook by sliding it into the cut slot in the tube with the hook end hanging over the aft end of the tube. Wood glue one cardstock centering ring into place at the line 1/2” (13 mm) from the aft end of the motor mount tube.

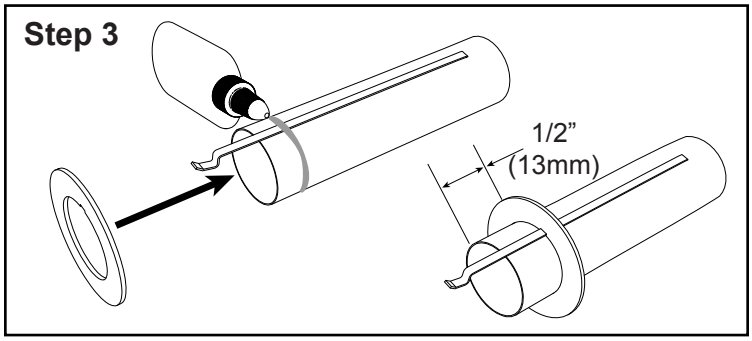

4. Tie the shock cord around the middle of the motor mount tube.

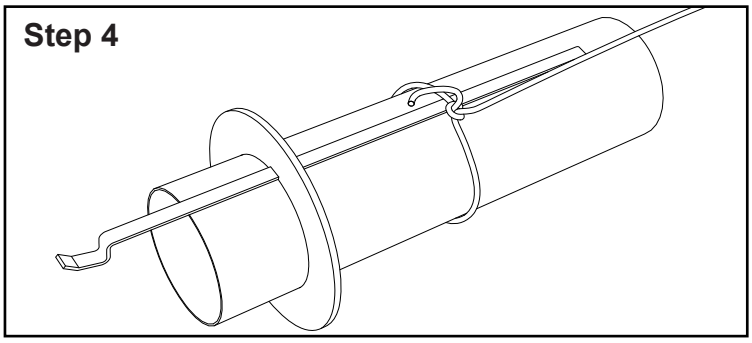

5. Route the shock cord through the other cardstock centering ring then wood glue the centering ring into place at the line 1/2” (13 mm) from the front of the motor mount tube. Pull the shock cord tight against the backside of the centering ring and apply a wood glue fillet to ensure the shock cord stays in place.

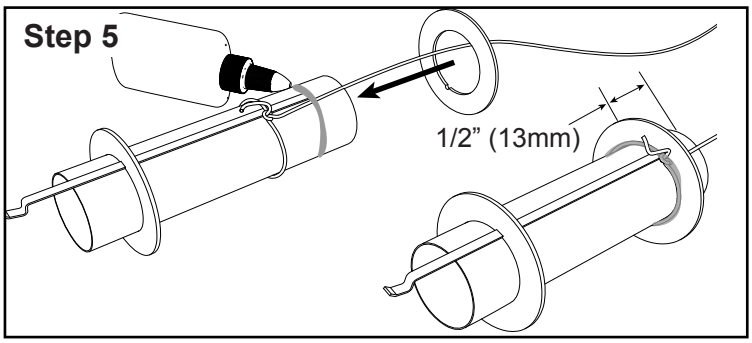

6. Route the shock cord through the larger green centering ring (CR-24/29) and using wood glue, secure the ring into place at the front of the motor mount tube flush against the forward centering ring.

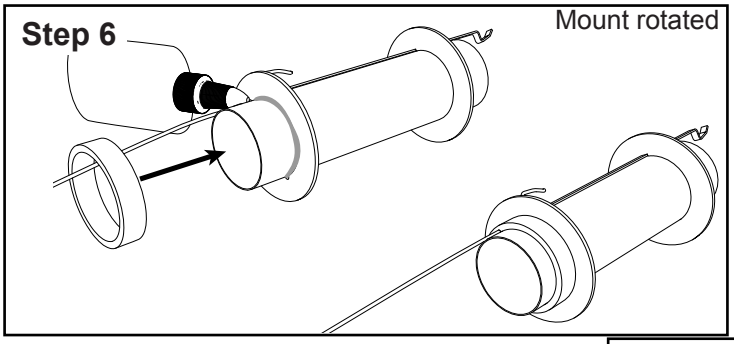

7. Put a ring of wood glue inside the front lip of the motor tube. Seat the smaller green centering ring (CR-18/24) in the front of the motor mount tube with wood glue. Install the ring so that it sits against the engine hook so that it acts as an engine block.

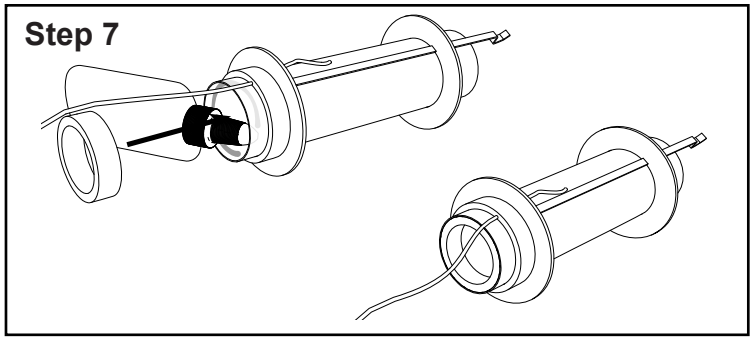

8. Using scissors, cut out the fin marking guide and tape it around the 9” long, 41.6mm diameter (BT-60) tube. Copy marks for all of the lines onto the tube with a pencil. It is also useful to label the different lines and the forward end of the tube to coincide with the forward label on the marking guide. This is the booster tube.

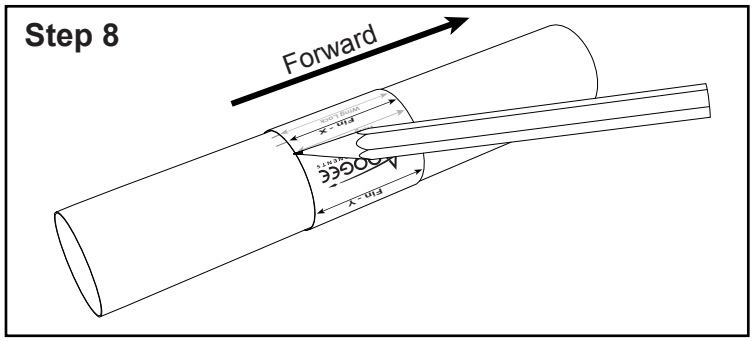

9. Extend the lines along the length of the tube using an aluminum angle to ensure the lines are straight along the tube. The fin lines can be drawn about halfway from the aft end of the tube and the support lines and launch lug line can be drawn about halfway from the forward end of the tube.

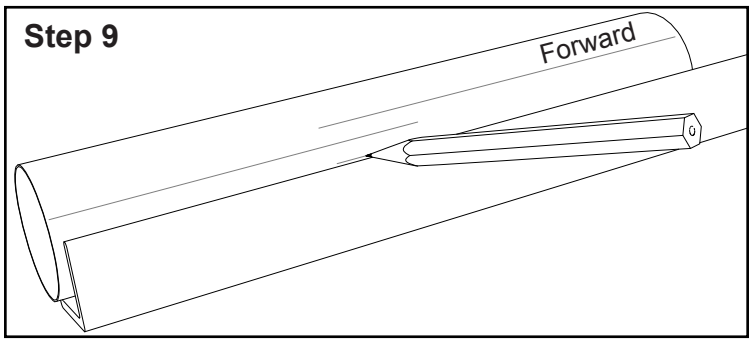

10. Measure 3/4” (19mm) from the front of the tube, and using a pencil, mark the location on the upper support lines.

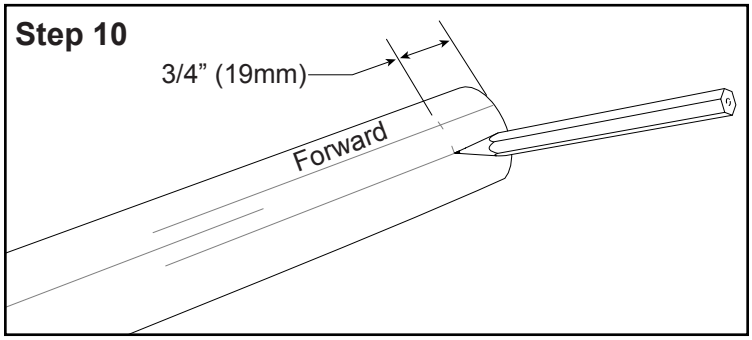

11. Route the shock cord back through the center of the motor tube and glue the motor mount assembly into the booster tube. Using a dowel, apply wood glue at points 1/2” (13 mm) and 3” (76 mm) deep inside the tube, then slide the motor mount assembly into the tube so that the aft end of the motor mount tube is flush with the aft end of the booster tube. Set aside to dry.

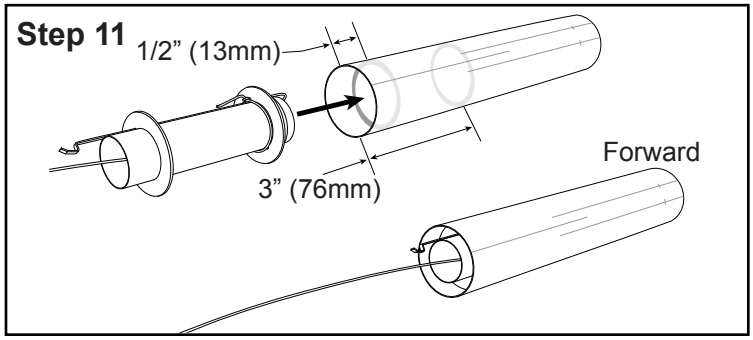

12. Before removing the booster fins from the 1/8” balsa sheet (P/N 15732), sand the surface smooth on both sides using a fine grit sandpaper (320 grit).

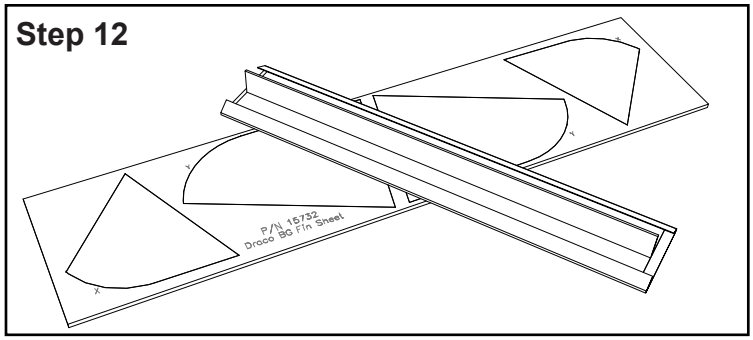

13. Remove the booster fins from the sheet using a hobby knife and sand the edges of the parts to remove any remnants of tabs.

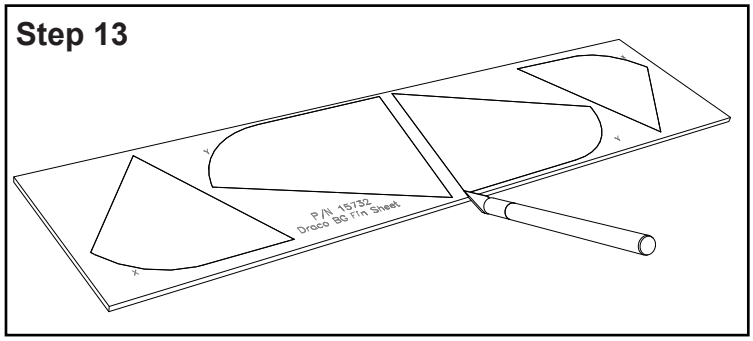

14. Remove the two wing lock supports (CC) from the 1/8” balsa sheet (P/N 15488) using a sharp hobby knife and sand off the remnants of any tabs using fine grit sandpaper (320 grit).

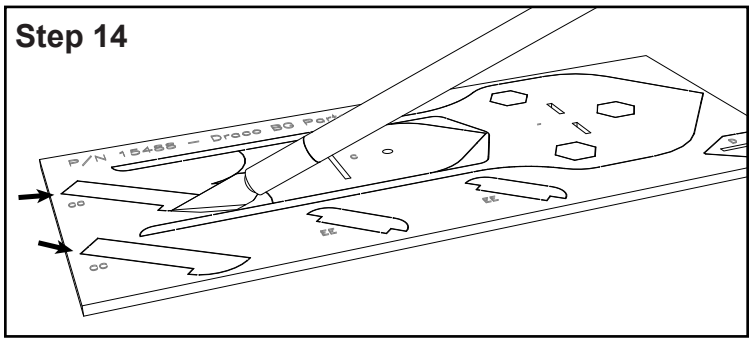

15. Using fine sandpaper (320 grit) smooth and bevel one end of one of the 2-1/2” long (63 mm) hardwood dowels. Glue the other (flat) end of the dowel into the notch in one of the wing lock supports (CC), tape it in place and let the assembly dry. Repeat the sanding and assembly for the second dowel and support. **Optional: sand one of the dowels 1/8” (3mm) shorter than the other so that the wing locks can be aligned separately, making flight preparation easier.**

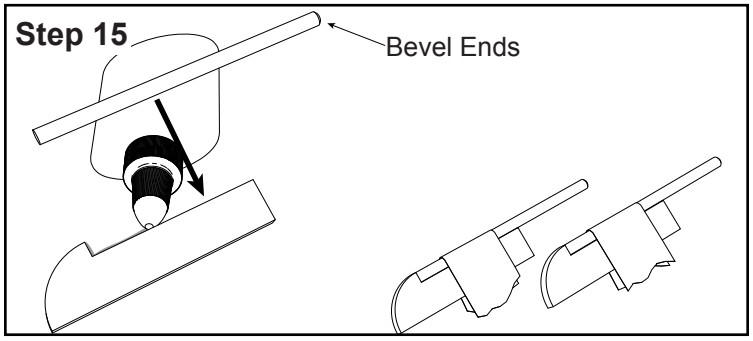

16. Using wood glue, glue the fins onto the booster tube with the fins aligned on the lines marked on the tube. The larger fins provide stability in the plane of the glider wings and should be attached to the Fin-Y lines on the tube. The shorter fins are attached on the Fin-X lines and fall between the wing lock lines on the top. A fin alignment jig can be helpful to ensure accurate construction but the fins are too tall for most jigs to completely enclose the fins and, therefore, only the front sections of the fins will be retained. Take care to align the fins accurately along the long axis of the tube to ensure the straightest boost. Allow the fins to dry before continuing.

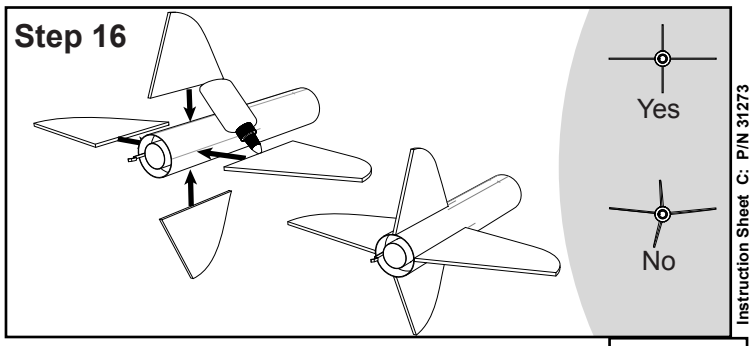

17. Remove the wing lock support frame (T) from the 1/16” plywood sheet (P/N 15490). Using a small drop of wood glue at the front of each balsa support, slide the two wing lock assemblies as far as they will go into part T. Then glue the whole wing lock assembly onto the booster tube with the support frame 3/4” (19 mm) from the forward end of the tube. The alignment lines drawn on the tube are placed at the outside edges of the wing lock supports. Take care that the supports and pins are aligned with the long axis of the tube to ensure reliable separation and wing extension.

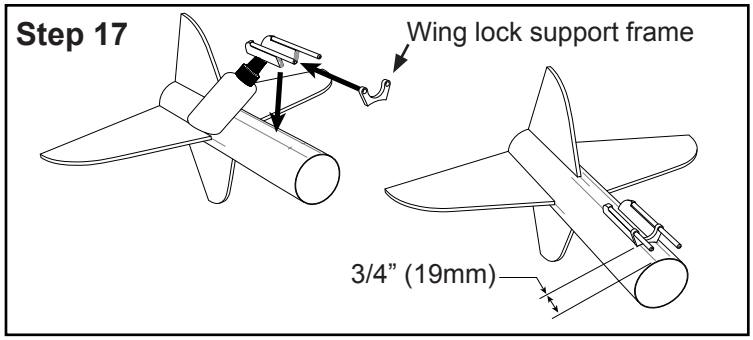

18. Wood glue one 1/4” x 3” long launch lug into place centered on the marked line and flush with the front edge of the booster tube.

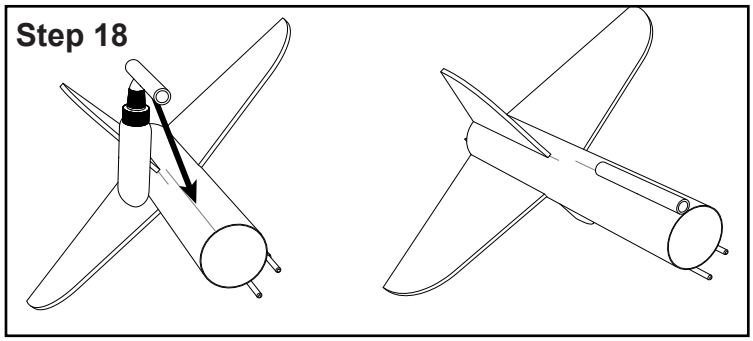

19. Using a sharp hobby knife, remove the two piston frames (Q and R) and the piston ring (S) from the 1/8” plywood sheet (P/N 15489).

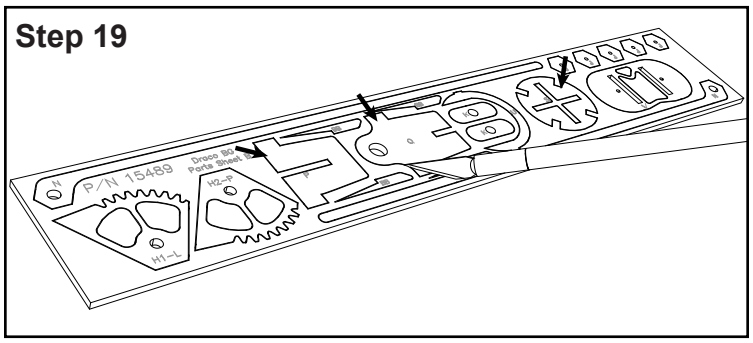

20. Apply wood glue to the notches of the two piston frames (Q and R) and slide them together.

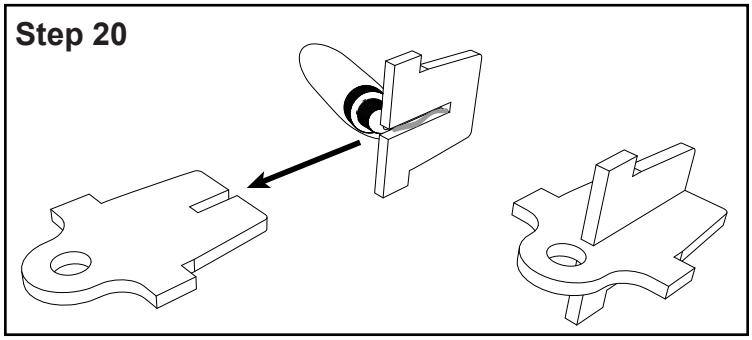

21. Apply wood glue as shown on the front edges of the assembled piston frame and slide the piston ring into place. Add wood glue fillets along the joints between the piston frames and piston ring for strength.

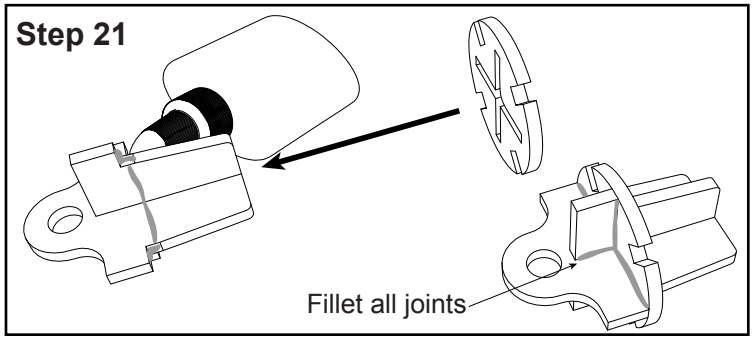

22. Apply a bead of wood glue to the inside of the short red coupler tube at roughly the middle and slide the piston frame and ring assembly into the tube. To correctly align the frame and ring in the tube, place the tube and the flat end of the frame against the table so that they are flush. Ensure that the edges of the piston ring have fillets where they touch the coupler tube but leave the slots clear so that the glider is able to slide into place later.

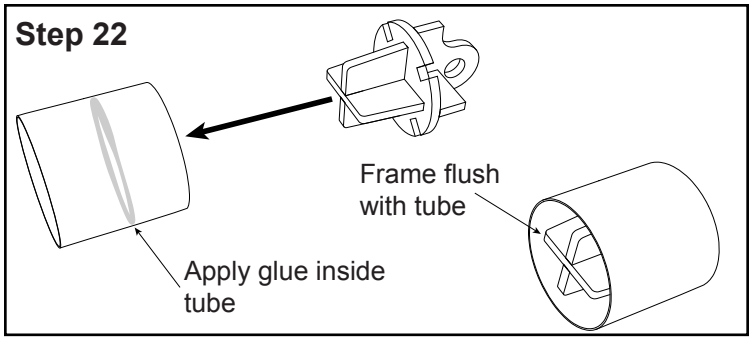

23. Apply wood glue fillets to the joints at the base of the fins, the launch lug, and the supports by applying a bead of wood glue and shaping the fillet with the tip of a finger.

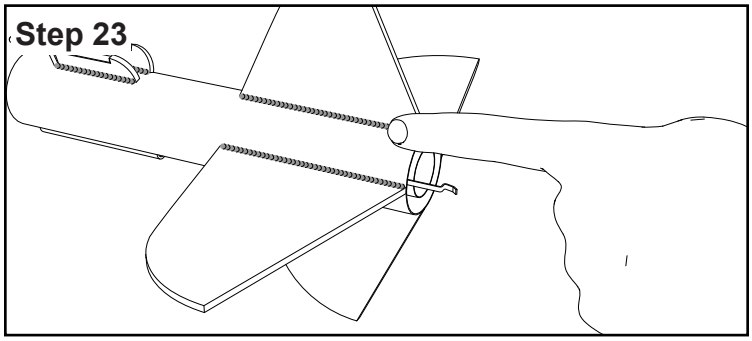

24. Once the booster has dried, test fit the piston in the tube witht the loop side facing aft, and adjust so that it fits snugly with little or no wobble but does not require excessive force to move. If the piston is tight enough that it becomes difficult to move, sand its surface with a fine sandpaper (320 grit) until it moves more easily.

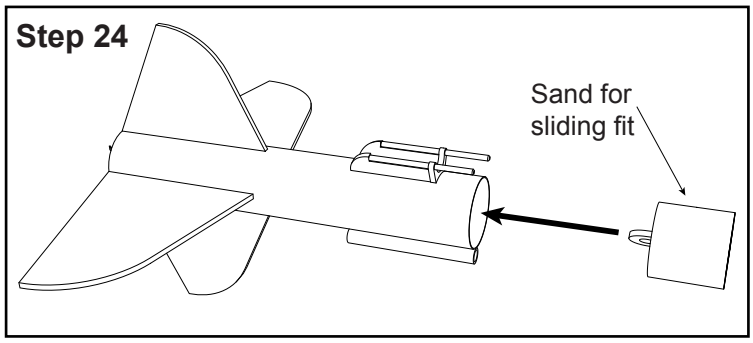

25. Pass the shock cord back through the motor tube then tie it onto the loop in the piston. Apply tape to the tail of the shock cord to prevent the knot from coming undone.

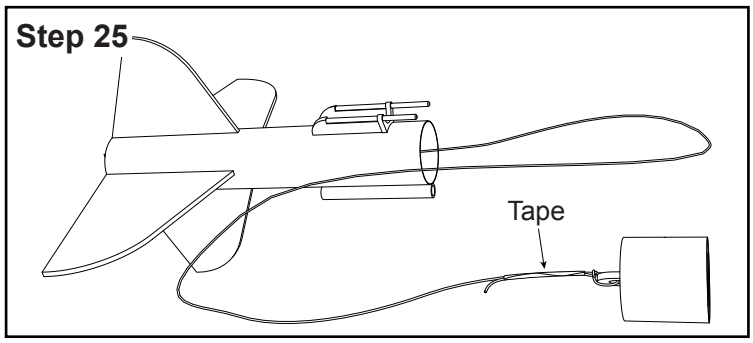

26. Attach the parachute by collecting the center of the parachute's shroud lines. Then pass them through the loop on the piston, and pull the parachute back through the ends, pulling the knot tight.

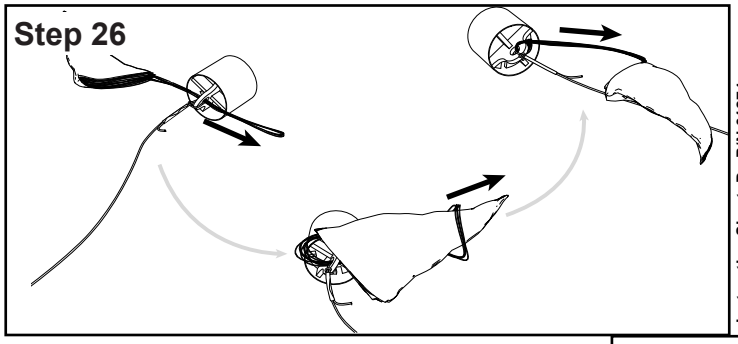

27. The physical build of the booster is now complete and the parachute and piston can be installed in the end of the tube to await finishing.

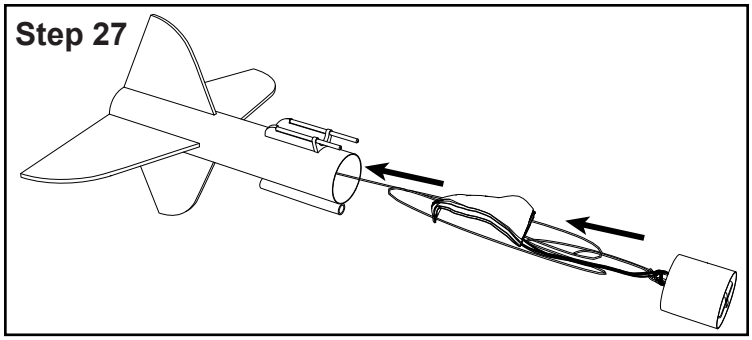

Label	Part
A	Upper Wing Frame
B	Main Wing Frame
C	Forward Wing Frame Spacer
D	Aft Wing Frame Spacer
E	Forward Wing Frame Alignment Guide
F	Aft Wing Frame Alignment Guide
J	Hex Insert
V	Stay Tie Frame
EE	Stay Tie Guide

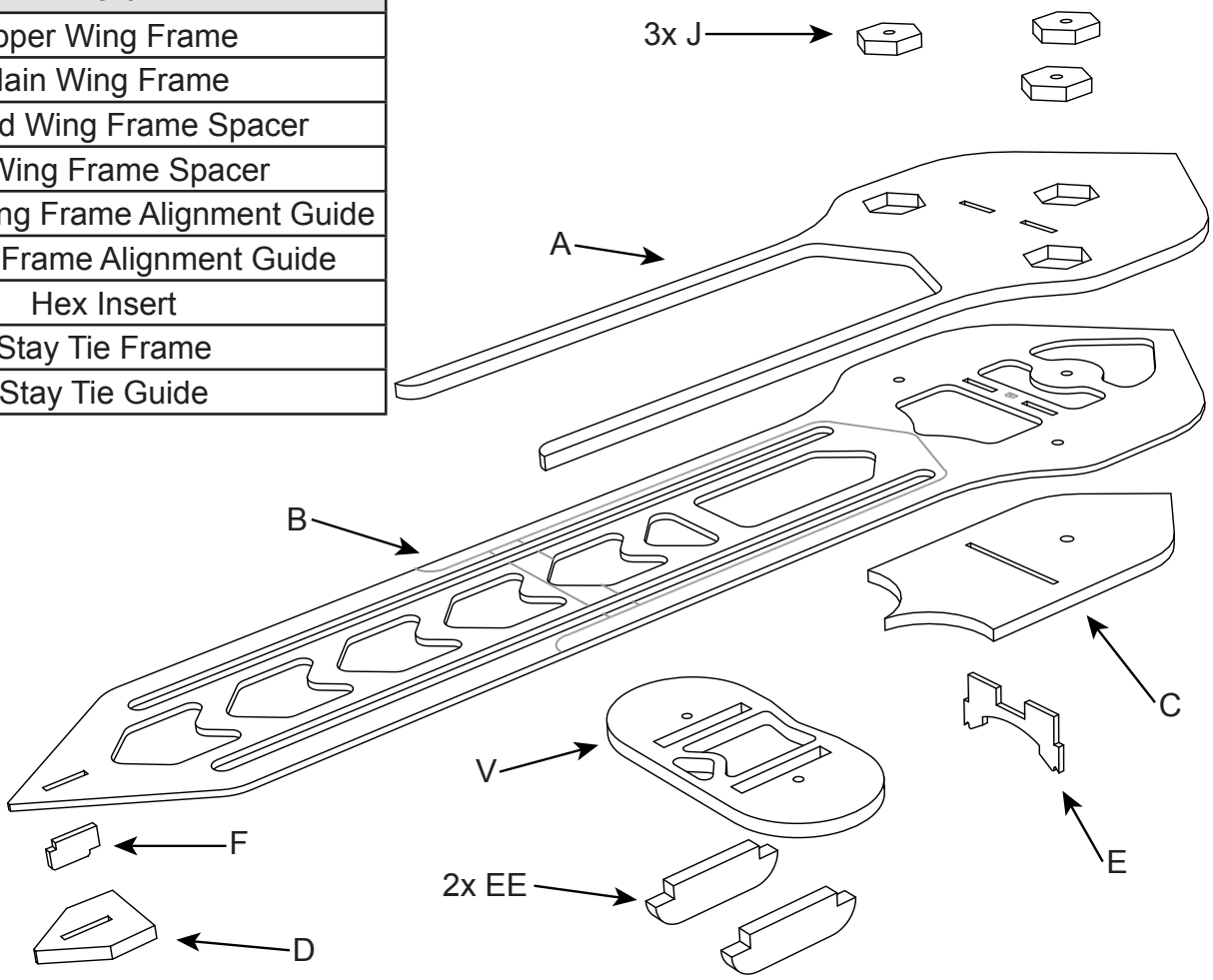

Glider Assembly Steps
Wing Frame:

28. Using a sharp hobby knife, remove the main wing frame (B) and the two wing frame alignment guides (E and F) from the 1/16” plywood sheet (P/N 15490) as well as the upper wing frame (A) and the forward and aft wing frame spacers (C and D) from the 1/8” balsa sheet (P/N 15488). Remove and discard the many small cutouts from within the main wing frame (B), the hexagonal pieces in the upper wing frame (A) and sand down any prominent tab remnants on all the parts using fine sandpaper (320 grit).

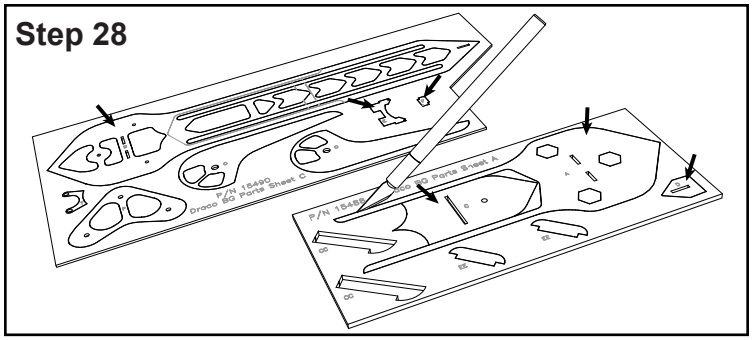

29. Apply a small amount of medium CyA adhesive to the slot in the forward spacer C and install the tabs of the alignment guide E (opposite the curved side) such that the tabs poke through the frame C and the curved portion is flush with the surface of the balsa in the center. Check that the frame is square to part C and allow the adhesive to harden.

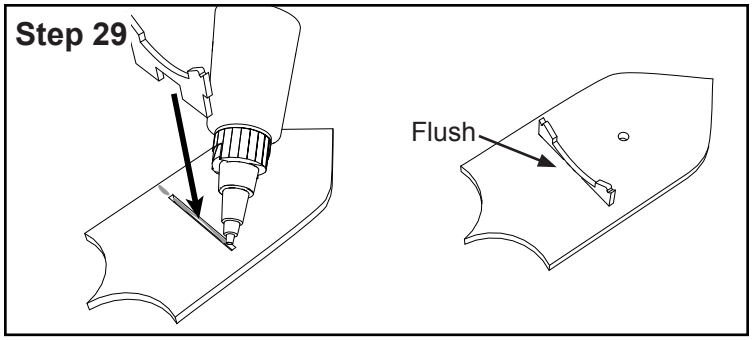

30. Dry fit the assembly onto the main frame B on the side opposite the engraving on the surface of B and using a pencil, trace around the forward spacer C.

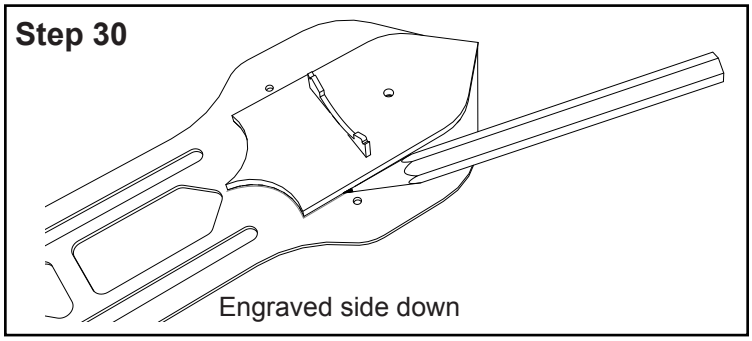

31. Apply medium CyA adhesive to the main frame B within the pencil outline then install the assembled spacer C and frame E onto the main frame B. Allow the tabs on E to align the large parts and check that the points on the balsa part C and the plywood part B are touching to ensure correct alignment.

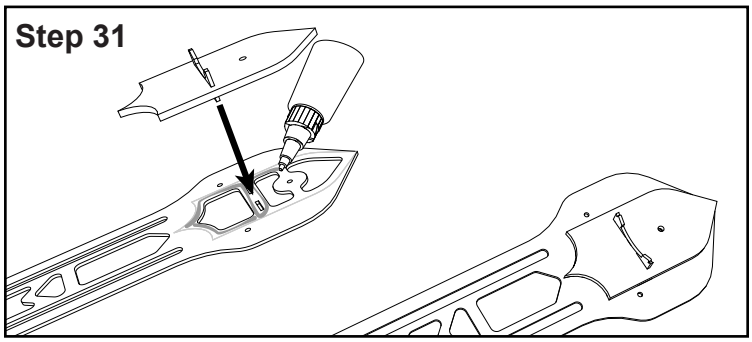

32. Apply medium CyA adhesive uniformly to the upper (engraved) side of main frame B in the area covered by the upper frame A (outline marked by engraving). Glue the upper frame A into place, taking care to align the two frames along the outside edge.

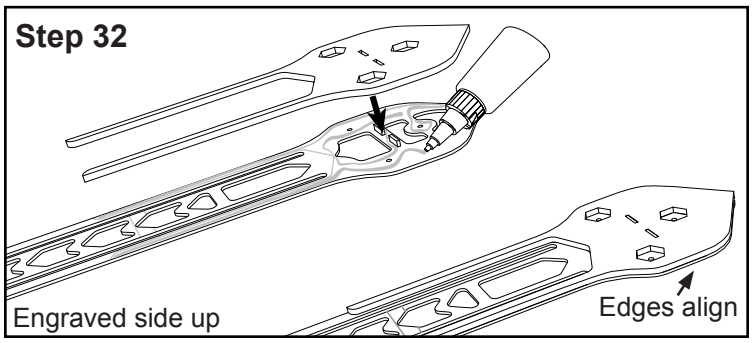

33. Aligning the engraved dot on part F at the forward end of the slot, place the alignment tab F on the bottom of the main frame B, opposite the engraving and the upper frame A that was just installed. Apply a couple of drops of thin CyA adhesive to tack part F in place during the next step.

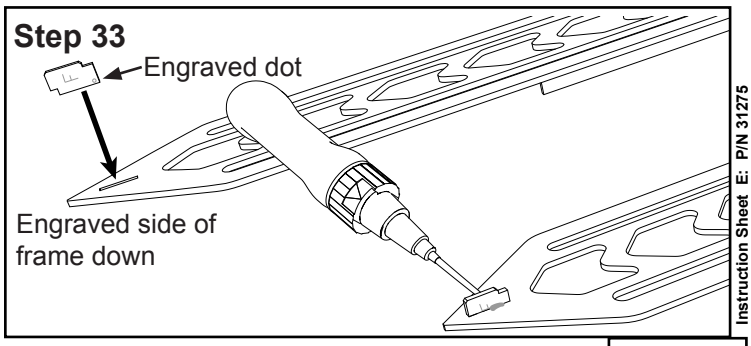

34. Apply medium CyA adhesive to the slot and one surface of the aft spacer (D) then slide it over the alignment tab (F).

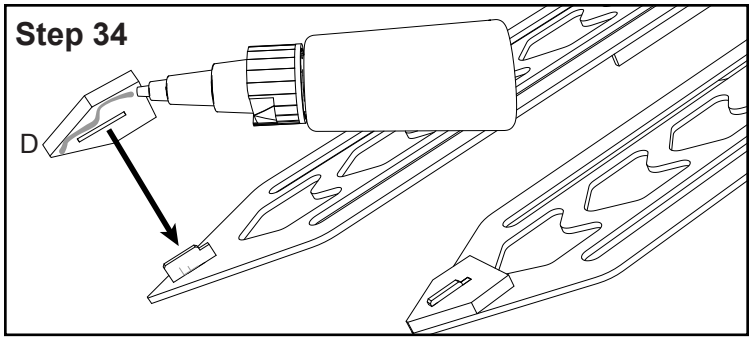

35. Using a sharp hobby knife remove three of the bolt hex inserts (J) from the 1/8” plywood sheet, parts sheet B (P/N 15489).

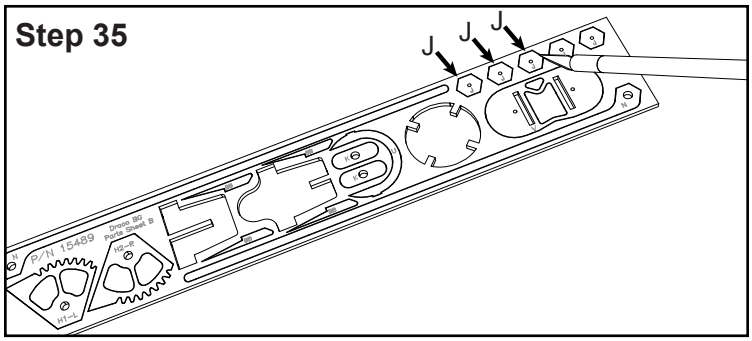

36. Insert the plywood inserts (J) into the three pockets on the upper side of the wing frame and secure them by running a bead of thin CyA adhesive along the edge. Apply enough adhesive that it will soak down into the joint and securely hold the inserts in place.

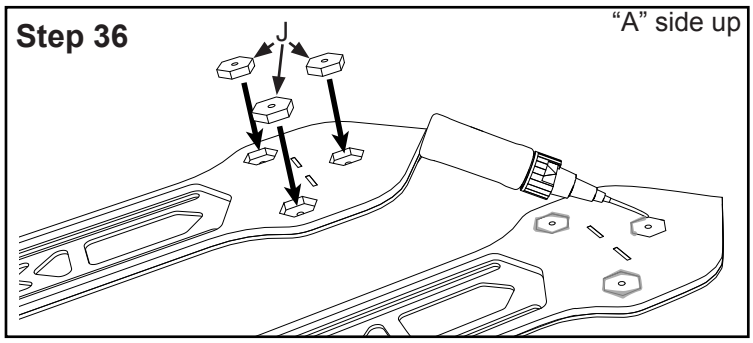

37. Remove the stay tie frame (V) from the 1/8” plywood sheet (P/N 15489) and the two stay tie guides (EE) from the 1/8” balsa sheet (P/N 15488), then insert the balsa guides (EE) into the plywood stay tie frame and secure by running a bead of thin CyA adhesive along the joint. This assembly is the stay tie and it holds the small (stay) wings together as the wings fold and extend.

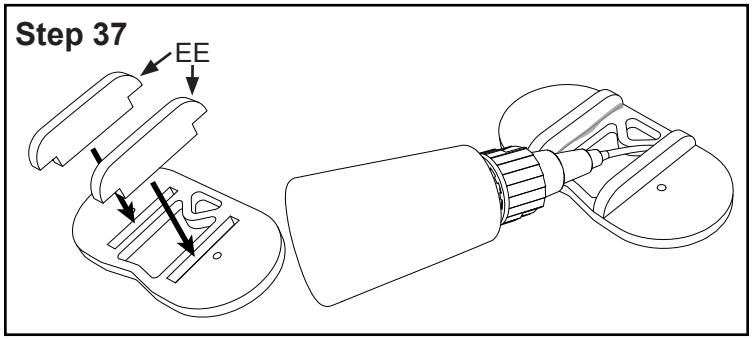

38. Once the glue has dried on the wing frame assembly and stay tie assembly, use a fine (320 grit) sandpaper to sand all of the edges – including inside the long slots – so that they are slightly rounded and smooth. Removing imperfections and sharp edges reduces the likelihood that the mechanism will catch during operation and increase the reliability of wing extension. Once sanded, set the frame and stay tie aside for later assembly of the wing mechanism.

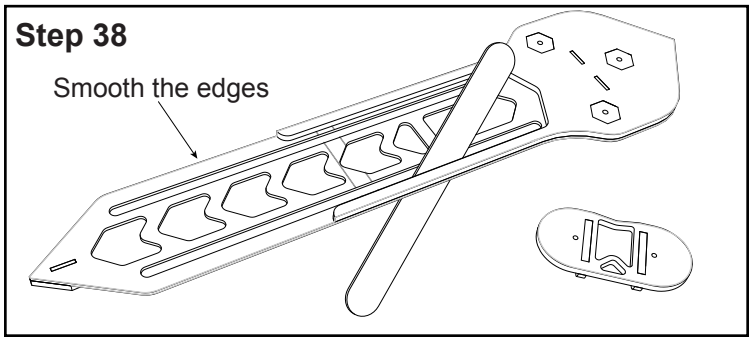

Label	Part
G	Main Wing
H1/H2	Root Pivot
J	Hex Insert
K	Stay Tip Pivot
L	Stay Wing
M	Stay Tip Spacer
N	Stay Wing Stiffner/Pivot
O	Main Wing Stiffner

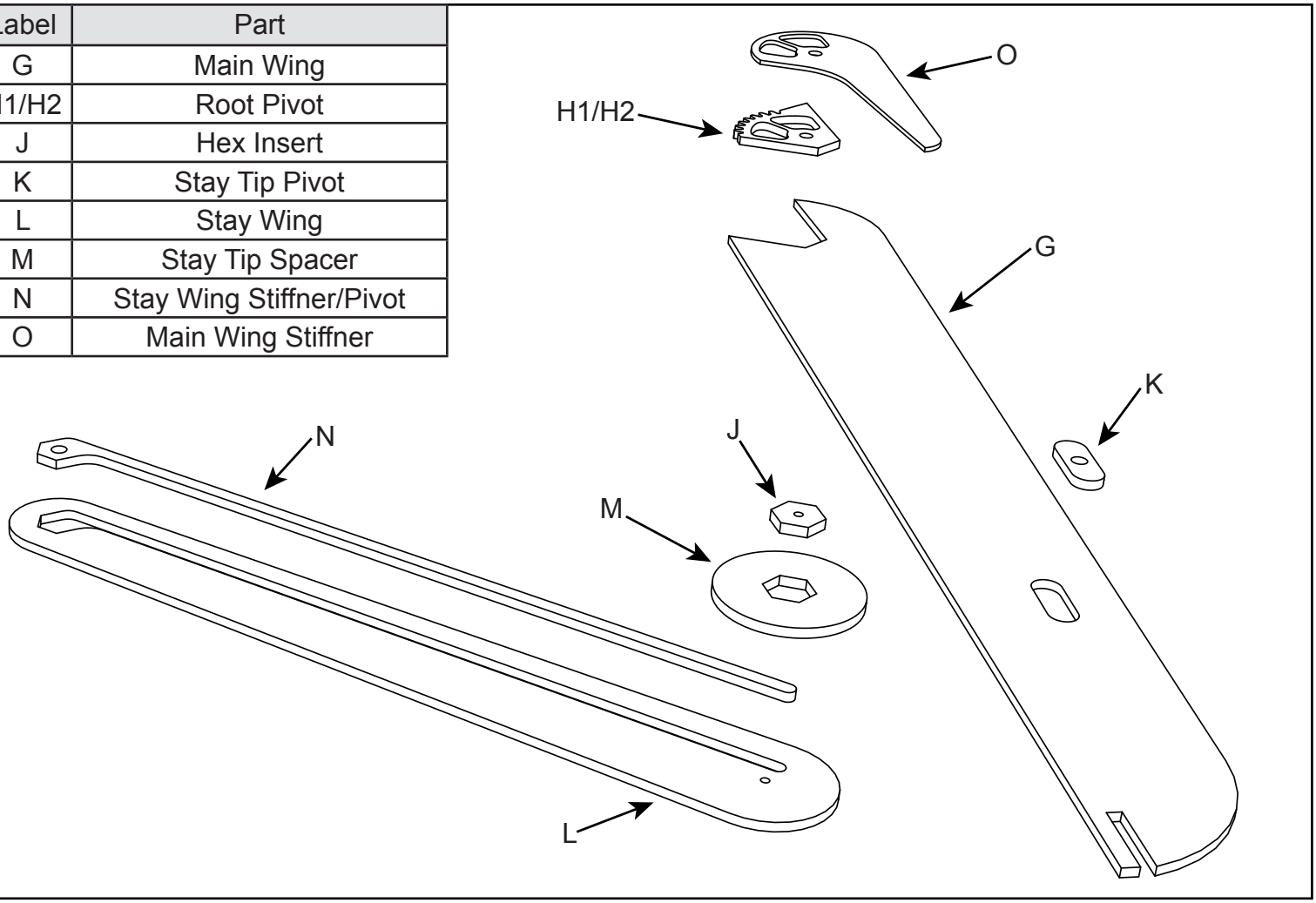

Wings:

39. Remove the root pivots (H1 & H2) from the 1/8” plywood sheet (P/N 15489) and the main wings (G) from the two 1/8” balsa wing sheets (P/N 15731). Sand the flat edges of the root pivots with medium sandpaper (180 grit) to roughen up the laser cut surface and improve glue adhesion.

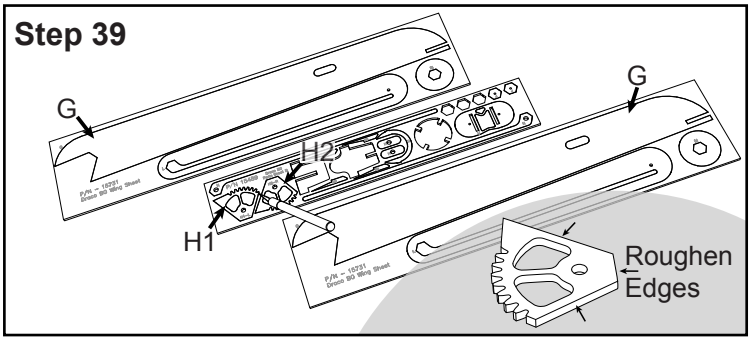

40. Apply wood glue to the inside edges of the root pivots and put them into place on the wing pieces, then use masking tape on the bottom side (opposite the engraving) to hold the plywood piece in place as the glue dries. Ensure that the pivots are flat and that there is as little gap as possible between the plywood and balsa parts. Repeat for the second wing and root pivot, then check that the wings form a left/right pair when the tape side of the joint is down on the table before allowing the joints to dry.

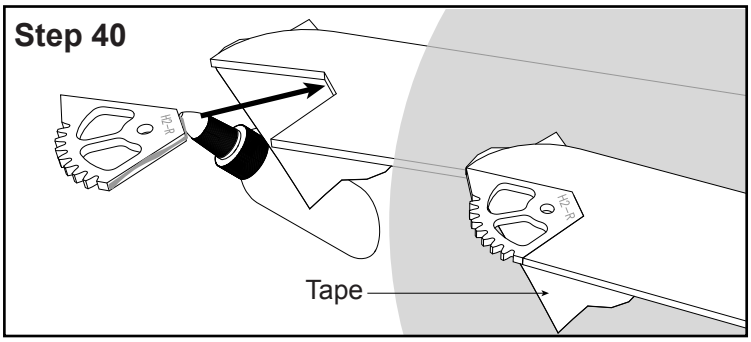

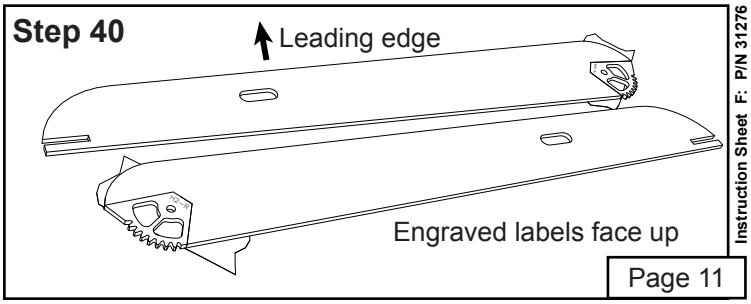

41. Remove the two stay tip pivots (K) from the 1/8” plywood sheet (P/N 15489) and press them into place on both main wings. Secure them in place by wicking thin CyA adhesive around the edges of K.

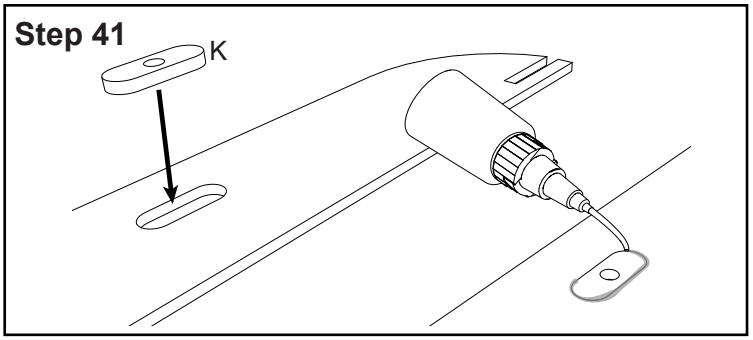

42. Glue the 1/8” launch lug tubes into the slots at the tips of the wings using wood glue. Then place some masking tape along the bottom surface to hold the wing and tube in place while the glue dries.

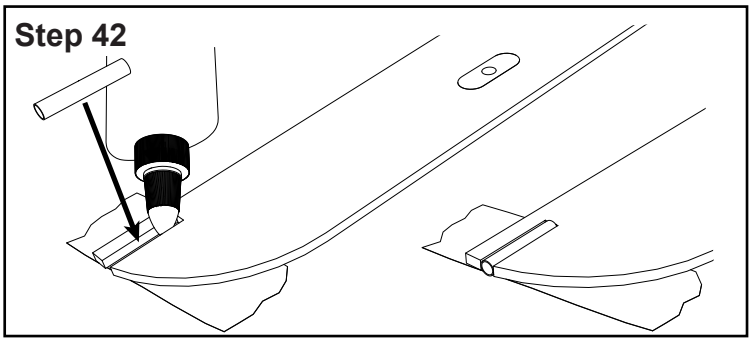

43. Insert one of the shorter (5/32”, 4mm) nylon standoffs in the root pivot hole. It will be used it to align the wing root stiffener. The standoff will sit below the surface of the stiffener but will stick up enough to assist with alignment. Remove the two wing root stiffeners (O) from the 1/16” plywood sheet (P/N 15490) and apply a thin layer of wood glue to the label side of the stiffener then mount it onto the wing, using the nylon standoff to center it. Align the long straight edge of the stiffener so that it is lined up parallel with the leading edge of the wing. Then apply pressure to the stiffener joint to prevent the thin plywood from curling up as it dries. This can be achieved by placing a sheet of glass or wax paper over the wing and weighing it down with a book. Repeat for the second wing and allow them to dry under pressure.

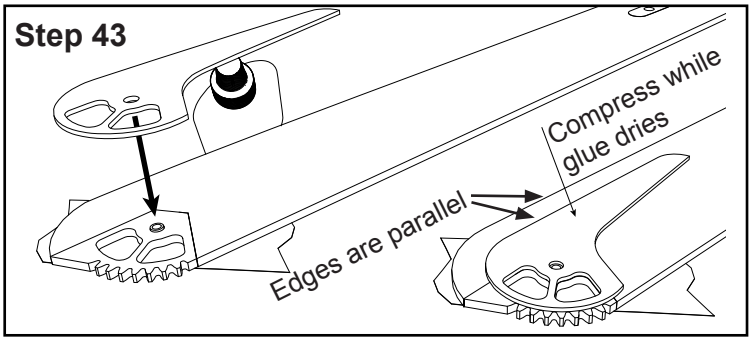

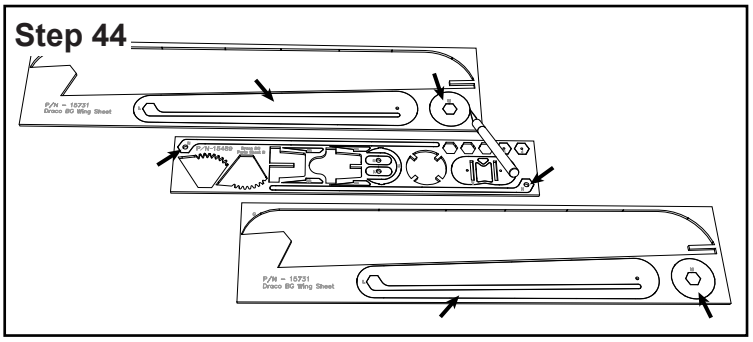

44. Remove the two stay wing stiffener/pivots (N) from the 1/8” plywood sheet (P/N 15489) and the two stay wings (L) and two stay tip spacers (M) from the 1/8” balsa wing sheets (P/N 15731).

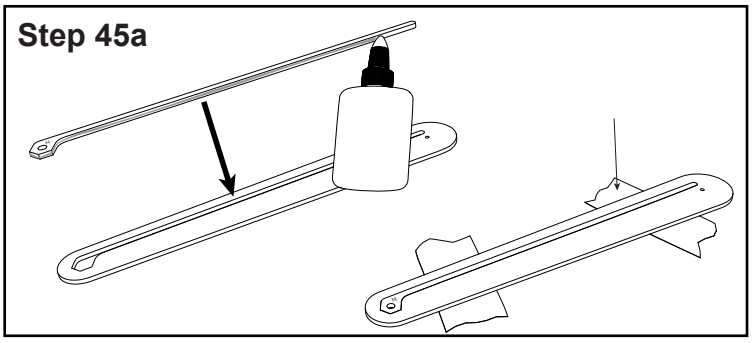

45. Apply wood glue to the exterior edge of the stay wing stiffener/pivot (N) then install into the slot on the stay wings. Clean up any glue that squeezed out and apply tape to one side of the wing to hold it together as it dries. As before, apply the tape to the bottom surface (engraving on part N facing up). Repeat for the second piece. The stay wings will form a left/right pair where the pivot holes are toward the center and the stiffeners are toward the forward half of the wings.

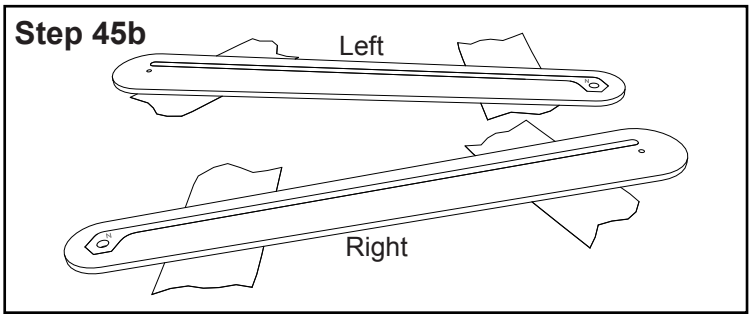

46. Apply a thin layer of wood glue to the tip spacers (M) and attach to the outer tips of each stay wing flush with the outer radius. For maximum strength, rotate the spacers so that the grain in the spacers is at a 90 degree angle to the grain in the stay wings. Apply pressure as the glue dries in a similar way to attaching the main wing stiffeners previously to ensure that the parts remain flat and do not curl away from each other as a result of the water in the wood glue.

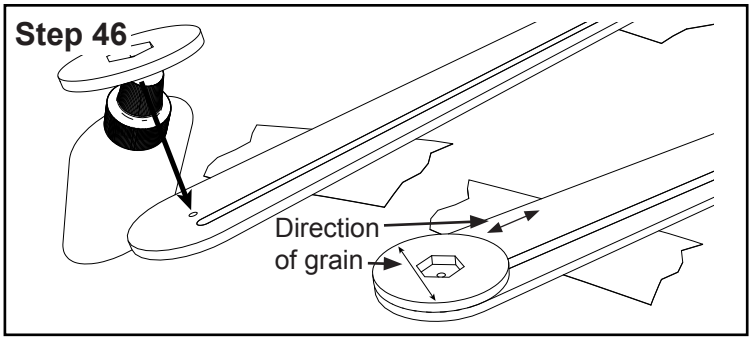

47. Using a sharp hobby knife remove the remaining two hex inserts (J) from the 1/8” plywood sheet (P/N 15489) and press into the ends of the stay wings. Secure the inserts in place by running a bead of thin CyA adhesive along the joint.

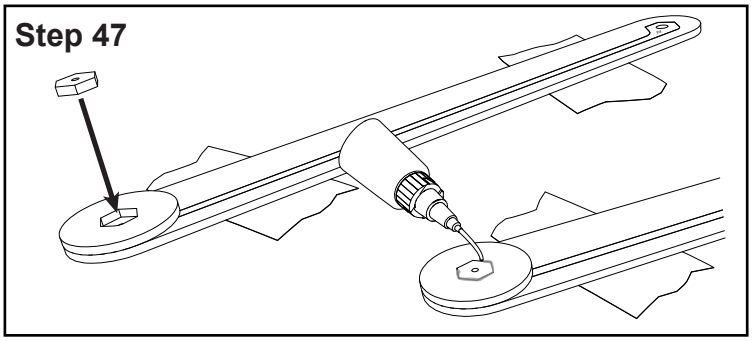

48. Using a sharp hobby knife, remove the vertical (Z) and horizontal stabilizers (AA) from the 3/32” thick stabilizer sheet (P/N 15733). Using fine sandpaper (320 grit), sand any remnants of the retaining tabs off of the outer edges of the parts. The alignment tabs themselves need not be sanded as they will end up inside the fuselage.

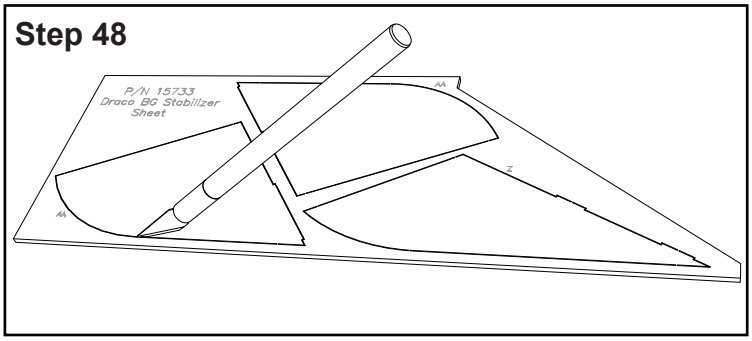

49. The vertical stabilizer (Z) has a symmetrical airfoil, that is, it should be as close to the same on both sides as possible. Round the leading edge (the front) of the stabilizer using medium sandpaper (180 grit) then taper the trailing edge (the back) down to a thickness of around 1/32” (0.75 mm). Thinner trailing edges are aerodynamically more efficient but are more prone to damage. Once the vertical stabilizer has been airfoiled, smooth the surface with fine sandpaper (320 grit).

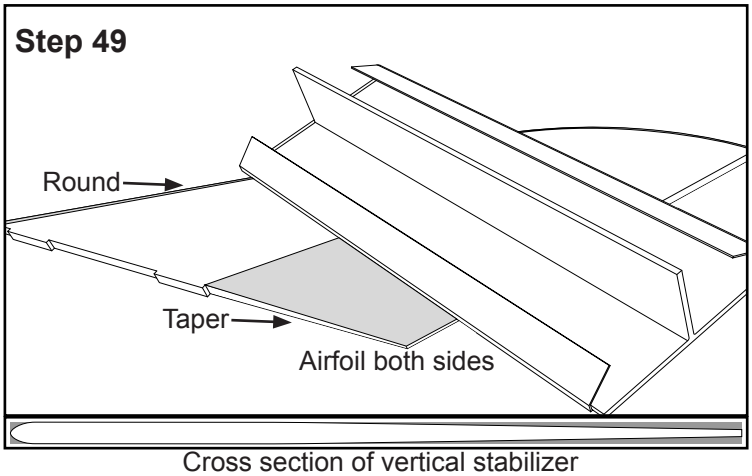

Cross section of vertical stabilizer

50. The horizontal stabilizers are shaped with a curve on only one side (the bottom) while the other side (the top) is flat. Lay out the two horizontal stabilizer pieces in a pair to keep track of which side to sand, then round the leading edge of each horizontal stabilizer (AA) using medium sandpaper (180 grit). Taper the aft half of each stabilizer so that the trailing edge is at most 1/32” (0.75 mm) thick. If the two horizontal stabilizers are arranged on a table with the root edges (the edges with small alignment tabs) together, the flat sides of the stabilizers should rest on the table and the tapered side should point up. Once both stabilizers have been shaped evenly, smooth the surface using fine sandpaper (320 grit).

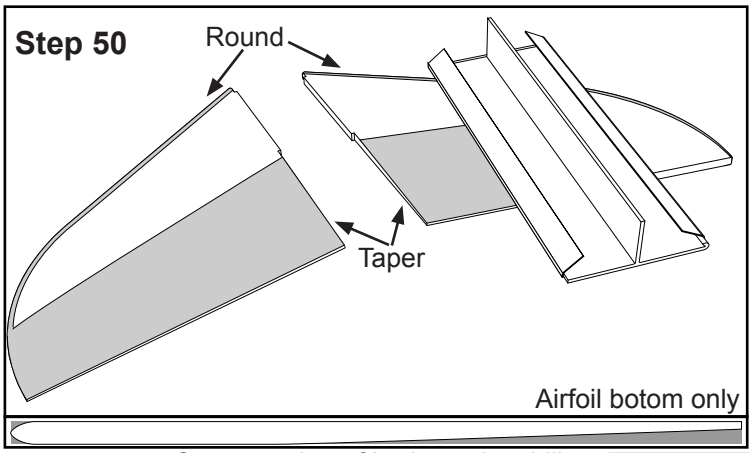

Cross section of horizontal stabilizer

51. Remove the tape from the main wings, then shape each wing into a flat bottom airfoil where the wing stiffeners are facing up. Use medium sandpaper (180 grit) to round the leading edge of the wing then taper the aft 2/3rds of the wing down to a thickness of at most 1/32” (0.75 mm). Carefully smooth the airfoil into the wing stiffener at the root of the wing and the wing tip lock tube (the installed 1/8” launch lug) at the tip. Repeat the shaping with the second wing and smooth the surface using fine sandpaper (320 grit).

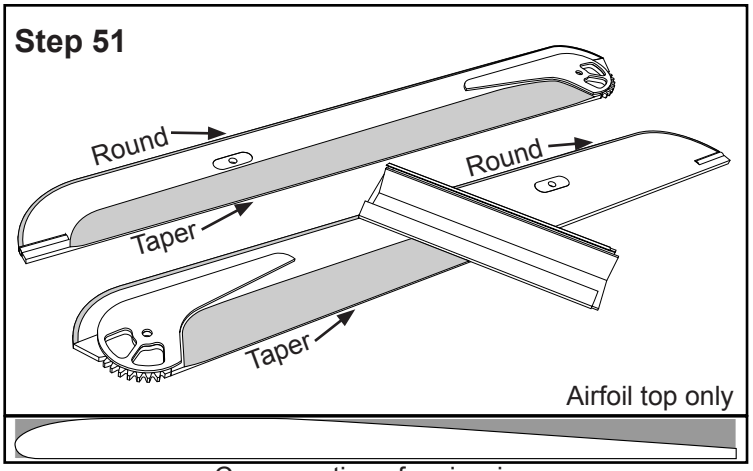

Cross section of main wings

52. Using medium sandpaper (180 grit), sand a flat-bottomed airfoil into the stay wings. The roots of the stay wings are thinner and have the large pivot hole. Make sure that the plywood stiffener is in the forward half of the wing. First, round the leading edges of the wing, then taper the aft section down to no more than 1/32” (0.75 mm) thick. The plywood stiffener can be used as a guide for the forward radius and aft slope sections. Meanwhile, the section around the inner pivot can remain at full thickness for maximum strength and stability of the joint. Once both stay wings have been shaped, smooth their surfaces with fine sandpaper (320 grit).

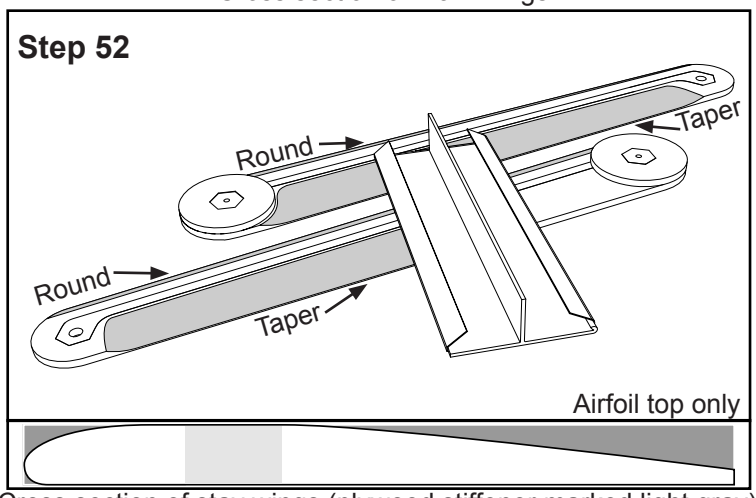

Cross section of stay wings (plywood stiffener marked light gray)

Fuselage:

53. Remove the large rectangular section from the laser-cut fuselage tube 41.6mm x 18” long using a sharp hobby knife.

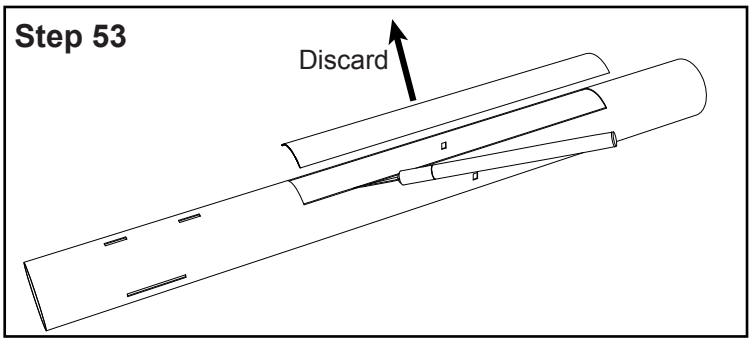

54. Remove the fuselage stiffener ring (U) from the 1/8” plywood sheet (P/N 15489) using a hobby knife.

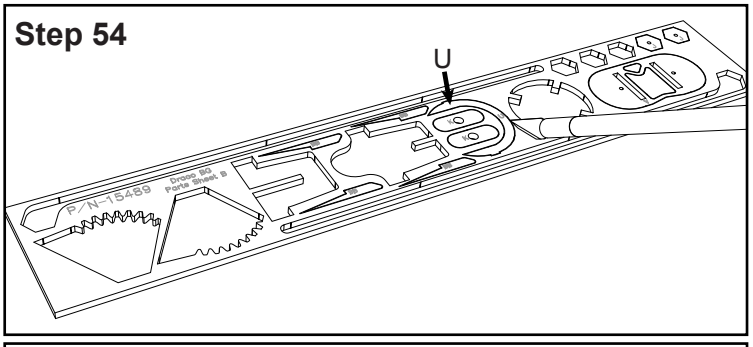

55. Using wood glue, install the fuselage stiffener ring (U) into the fuselage tube by applying a bead of glue along the inside of the tube – inline with the alignment slots – and inserting the stiffener ring into place with the alignment tabs on either side sitting in the slots in the tube. Hold the joint under pressure with a strip of masking tape across the top then set the fuselage tube aside to dry.

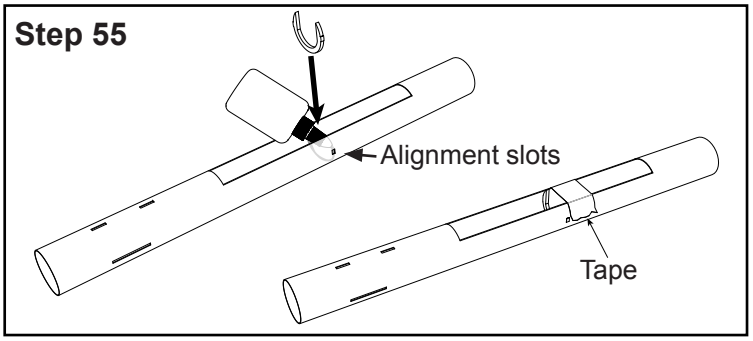

56. Remove the four pieces of the stabilizer alignment jig from the cardstock sheet (P/N 15487) and assemble the jig. Press the tabs in the standoffs through the slots in each alignment plate then secure the jig by wicking a small amount of thin CyA adhesive in each joint.

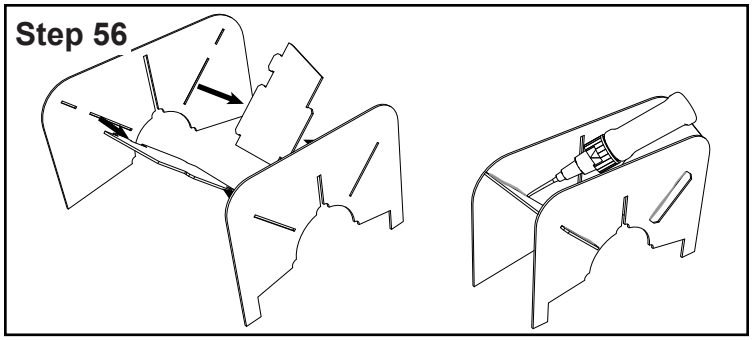

57. Apply wood glue to the root of the vertical stabilizer then install it into the fuselage tube. The small tabs on the stabilizer seat into the slots on the tube. Once the vertical stabilizer is installed, place the alignment jig (assembled in the last step) with the larger alignment plate facing toward the aft end of the vertical stabilizer and slide the jig back until the upper edge of each slot just touches the forward edge of the vertical stabilizer. With the jig in place, allow the glue to set.

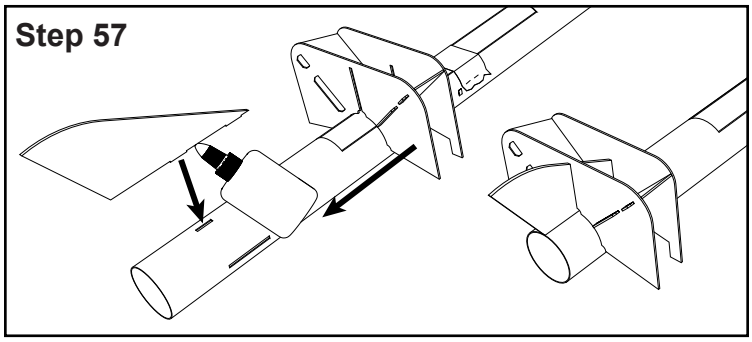

58. Place the fuselage tube, vertical stabilizer, and jig upside down with the forward end of the tube and the alignment jig resting on the table, and the tip of the vertical stabilizer hanging off the edge of the table. Apply wood glue to the root of one horizontal stabilizer and install it into the fuselage, making sure that the flat (non airfoiled) side is resting on the alignment jig. Repeat with the second horizontal stabilizer. Finally, check that the stabilizers are sitting flush to the jig.

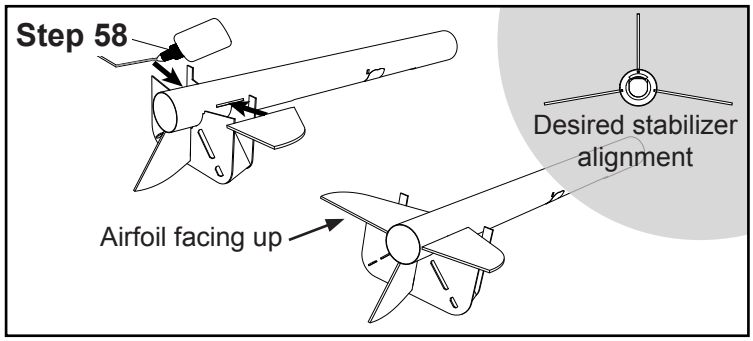

59. Glue the remaining 1/4” launch lug into place on the bottom side of the body tube within the engraved location and allow the stabilizers and launch lug to dry.

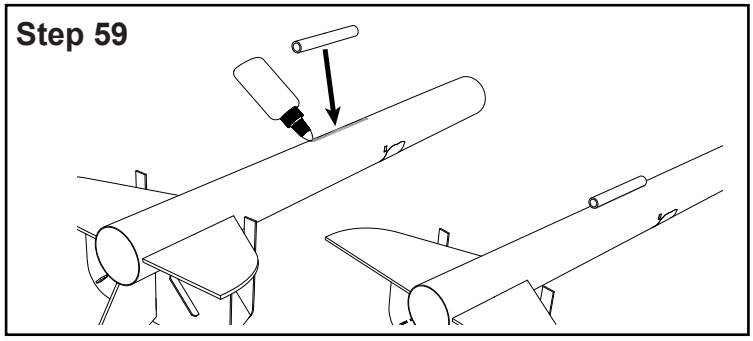

60. The nose cone and boattail used in this kit come as a single piece. To separate the two parts, simply apply pressure between them with a quick bending motion. Both the nose cone and transition will require some modification for use.

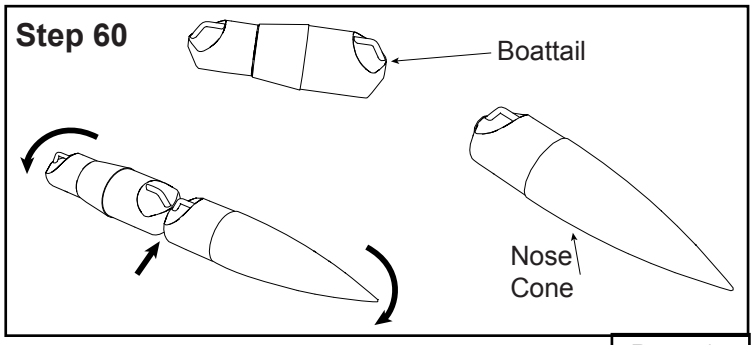

61. Using a razor saw, remove the entire smaller shoulder of the transition by cutting along the small depression right at the joint between the shoulder and the transition surface. If necessary, sand the cut end and inner edge of the transition with fine sandpaper (320 grit) to smooth any inconsistencies in the cut.

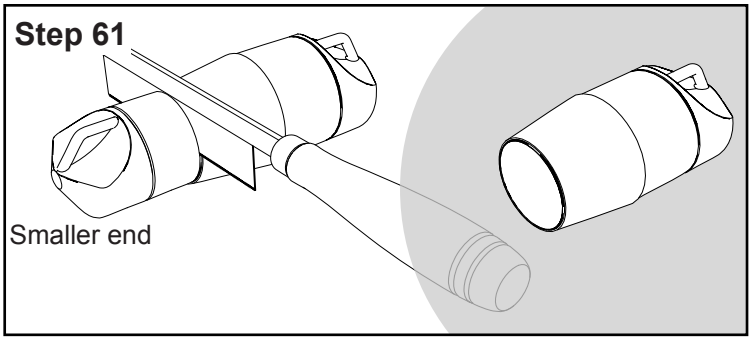

62. Cut the boattail marking guide out of the instruction booklet with scissors and wrap it around the transition section, taking care to align the ends carefully so that the wrap fits nicely on the transition. Rotate the guide so that one of the marking lines is roughly in line with the loop on the large transition, and mark the four vane positions using a fine-point marker. Remove the marking guide and extend the lines down the length of the transition using a ruler for straightness.

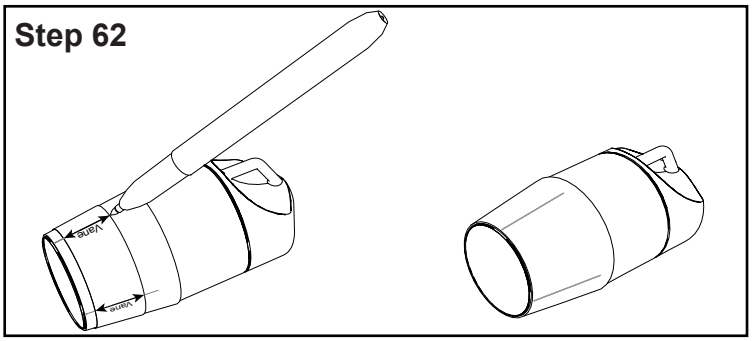

63. Remove the four alignment vanes (BB) from the 1/8” plywood sheet (P/N 15489) using a hobby knife and sand any tab remnants off with fine sandpaper (320 grit). Apply a small bead of medium CyA adhesive to the alignment vane (BB) and glue the vane onto the plastic transition with one of the marked lines on the left edge. Install the other three vanes in the same way, ensuring that all four vanes are installed on the same side of their respective lines. Reinforce the mounting with an added bead of CyA adhesive at the root of each alignment vane.

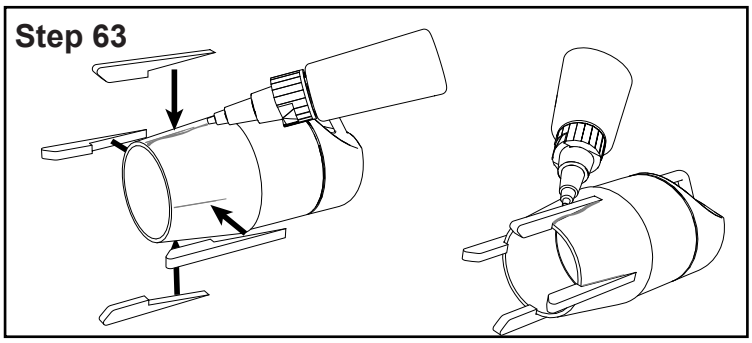

64. Test the fit of the assembled boattail in the piston. The alignment vanes should slide into the slots in the piston and the vanes should slide smoothly against the internal surface of the coupler tube. If the fit is too tight, sand the outside edges of the vanes with fine sandpaper (320 grit) until the boattail requires little or no force to remove from the piston. Ideally it should slide out under its own weight. Remember also that paint will make the fit somewhat tighter. So it is necessary to leave some extra clearance at this point.

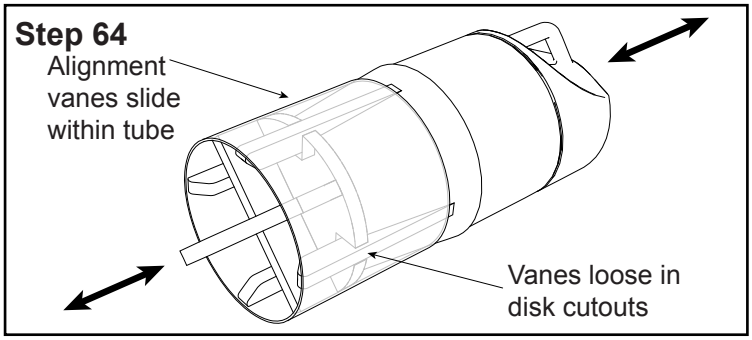

65. To modify the nose cone, simply cut the loop end of the nose cone shoulder off using a razor saw.

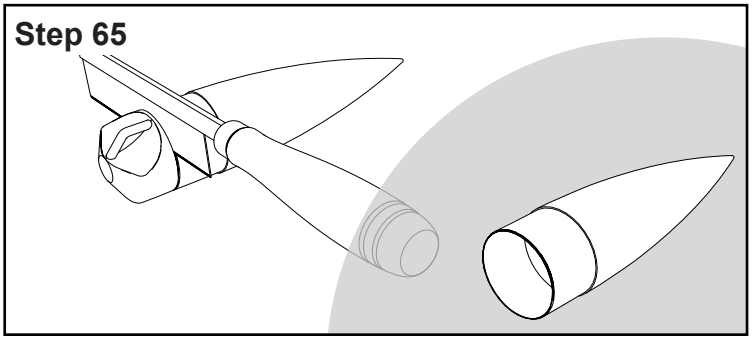

66. Make sure that the glue on the stabilizers and launch lug is fully dry then remove the fuselage from the jig and apply wood glue fillets to the joints. Run a bead of wood glue along the joint then shape the fillet with the tip of a finger.

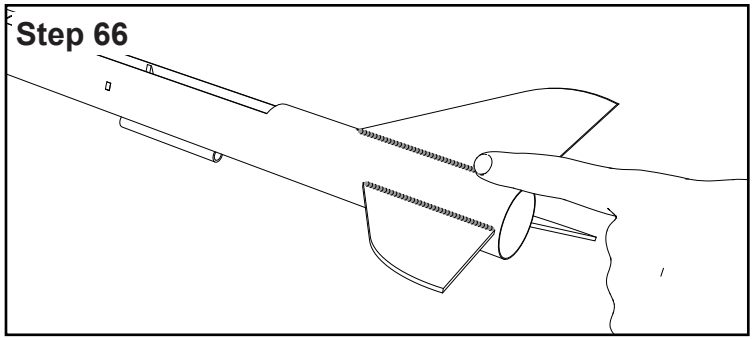

Painting:

67. Painting of the Draco BG is easier before the wing frame is glued into place. It is necessary to leave the attachment points clear of paint to ensure a strong attachment later. To do this, mask the area on the upper surface of the fuselage that the frame will glue into (As shown in the image). This includes a small portion (about 1/4” or 6 mm wide) at the aft end of the fuselage cutout as well as a cruciform area on the front that include a thin line down the centerline of the upper fuselage and one that covers the front support notches. Use the wing frame as a guide if neeeded.

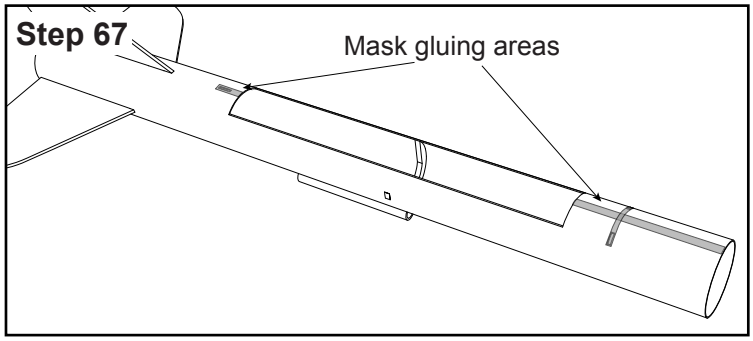

68. For the lowest friction operation of the wing mechanism, the wing frame and stay tie should be left either entirely unfinished or simply sealed with a gloss wood sealer then lightly sanded all over with extra fine sandpaper (600 grit). Typical enamel or acrylic paints will cause friction that makes wing deployment more difficult.

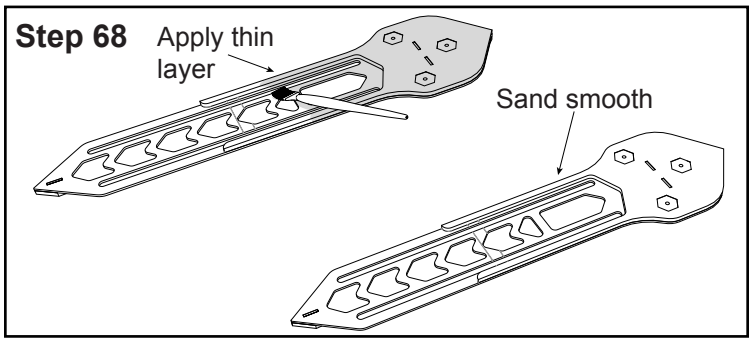

69. Optional: Fill all the balsa fins and the wings with wood filler and sand smooth with a fine sandpaper (320 grit) to achieve the smoothest surface finish.

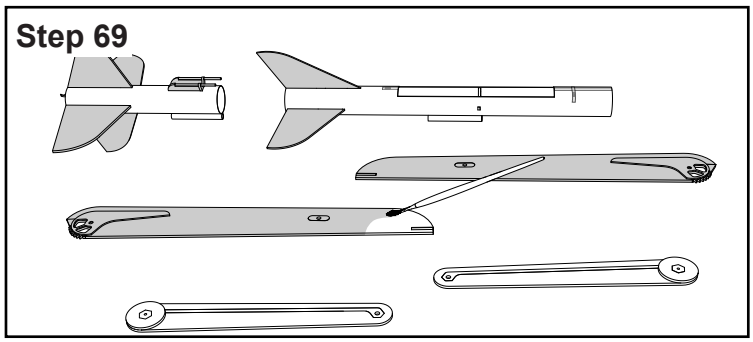

70. Remove the wing tie (P) from the 1/16” plywood sheet (P/N 15490) and sand it with fine sandpaper (320 grit).

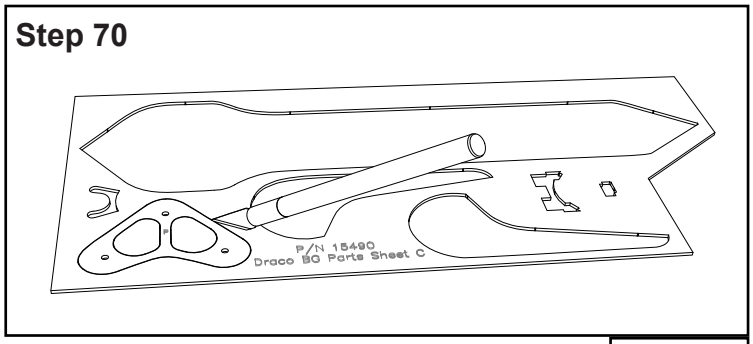

71. Prior to spraying the Draco, the interior of the tube can be protected by stuffing a couple of folded paper towels into the slot on the back. Apply primer first, and then paint to the wings, fuselage, wing tie, and booster, sanding between coats to achieve a smooth coat on all surfaces while using only the minimal paint possible. Gliders are sensitive to their weight and excessive application of paint can add a surprising amount of weight! (a reasonable application of paint adds around 20g, 2/3 oz., for the Draco glider)

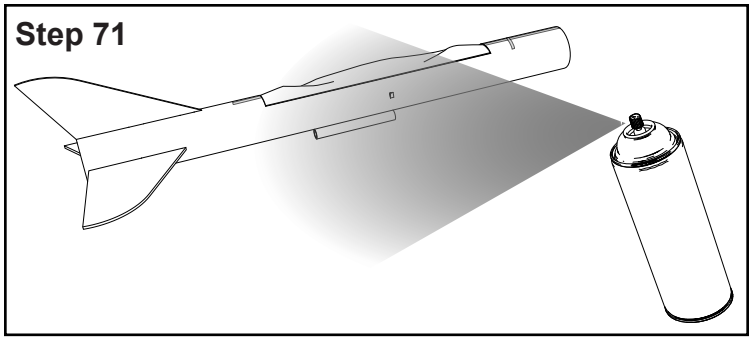

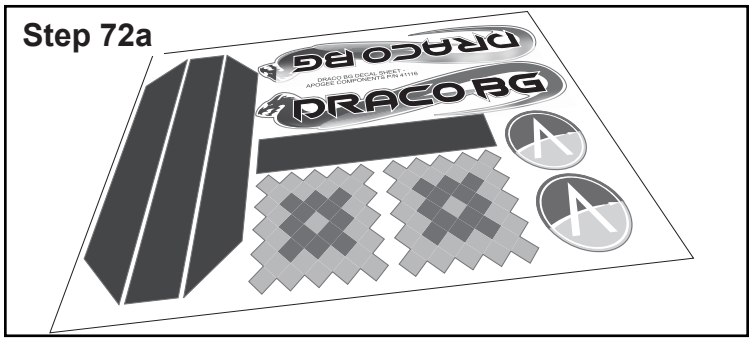

72. Allow the final coat of paint to dry at least 24 hours before applying the vinyl decals so that the paint isn't damaged. Remove each decal from the paper backing and apply soapy water to the back of them so that the decal slides easily on the surface of the painted rocket. If the decal begins to dry before it is correctly positioned, a little water can be added to the surface. Position the decals on the rocket and once they are in the correct location, press them down firmly and squeegee out any water underneath them. Once they dry entirely, the soapy water will not affect the adhesion of the decals on the rocket.

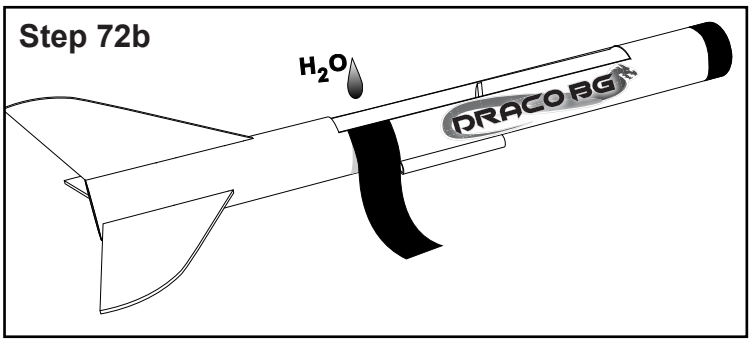

Wing Mechanism Assembly:

73. Using a 4-40 tap, cut threads into all five of the bolt hex inserts as well as in the two holes in the stay tie (set aside in step 38) - seven holes in total. All of the holes can be tapped straight through as there are clearance holes on the back side. **Optional: To ensure the threads hold reliably, saturate the threads with thin CyA adhesive and allow it to harden before continuing. Failure to allow the glue to cure entirely could result in the screws being glued in place, making the wing mechanism impossible to disassemble. So take care with this step!**

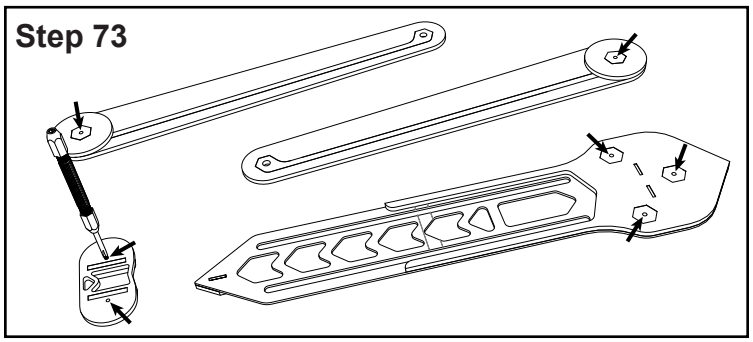

74. Test that the stay tie slides in the cutout in the fuselage. If there are any places that it obviously catches on the fuselage, sand them down until the slide no longer catches.

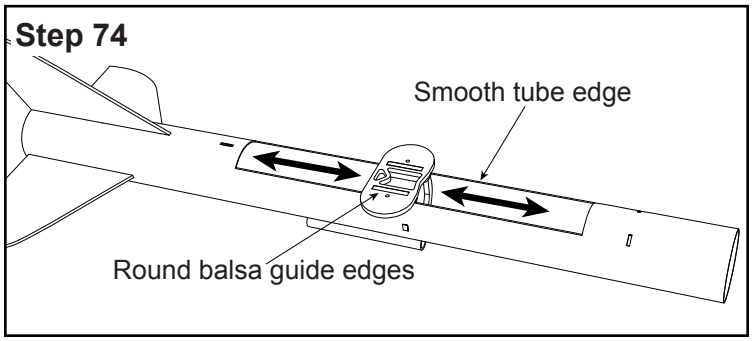

75. Remove the paint mask from the fuselage and wood glue the wing frame onto the fuselage, aligning it using the alignment tabs and ensuring that it sits at a right angle to the vertical stabilizer. Allow the frame to dry completely before continuing.

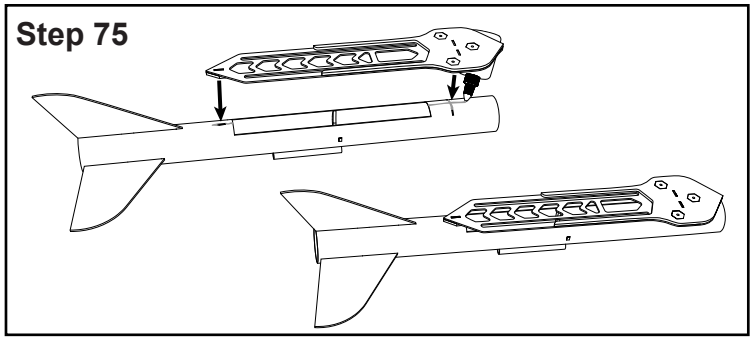

76. Slide the stay tie assembly through the gap between the tube and wing frame. The triangular slot should be towards the aft end of the fuselage and the two balsa guides face down into the tube. While it may require flexing the fuselage tube slightly, it will fit easily enough. As before, test that the stay tie slides easily along the whole length of the slot. If it does not, sand the balsa guides until it slides well.

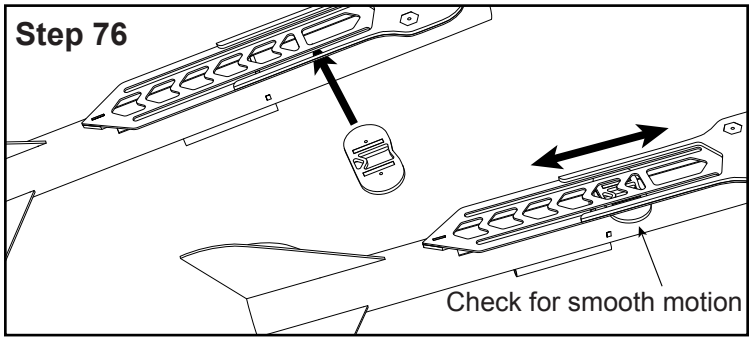

77. Attach the wing tie (from step 69) to the wing frame using the forward hole, a 4-40x1/2” screw and a 1/4” tall standoff. Tighten the screw enough that the frame just stays in place. All three screws will be tightened to final tightness together.

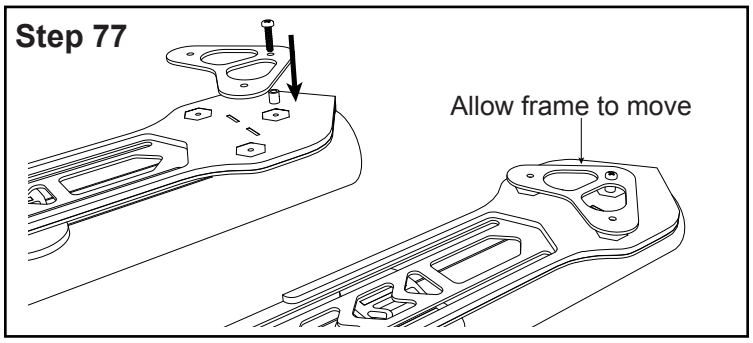

78. Check that a 1/4” tall standoff (the taller standoffs) will fit into the two pivot holes in each wing. If the standoffs refuse to go into the hole or if they are tight and do not rotate without substantial friction, clean the bore of the hole using a hobby knife or a round needle file. Remove the standoffs until the next step.

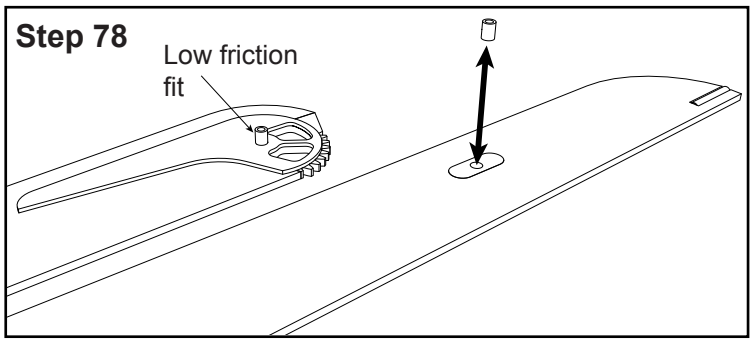

79. Once the pivot holes are cleared, insert a 1/4” standoff in the root pivot (near the gear teeth) and slide the wing between the wing frame and the wing tie with the standoff hole aligned with the hole in the frame. The 1/16” plywood wing stiffener should face up toward the wing tie. Hold the wing in place with a 4-40x1/2” screw just barely snug. Repeat with the second wing.

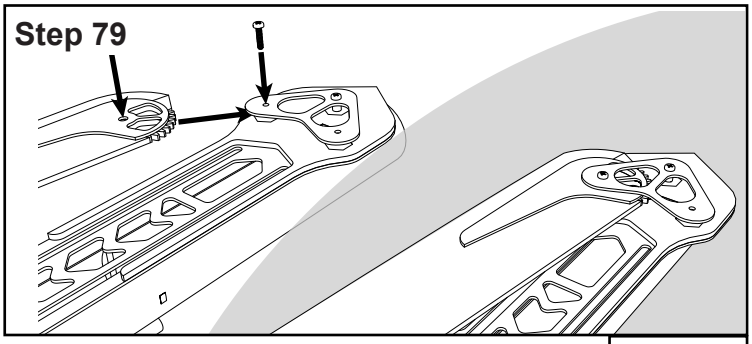

80. Check that the wings retract uniformly, sitting flush with the vertical stabilizer. There should be no gap on either side. If the wings are uneven because the teeth are misaligned, remove one wing and adjust its position slightly. Once the wings retract correctly, tighten all three screws in the wing tie and do a final check that the wings move smoothly with very little friction. If there is friction or binding, fix it before continuing. Extend the wings all the way out to provide access for the following assembly steps.

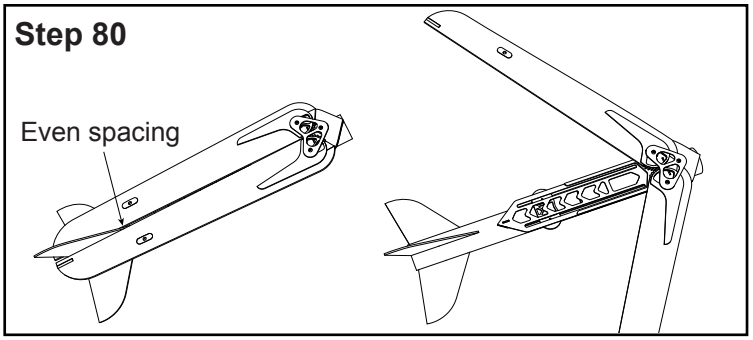

81. Slide the stay tie to the aft end of its travel then, making sure that the curved surface of the stay wing is facing up, place the root of the stay between the stay wing tie and the wing frame. Insert a 1/4” (6 mm) standoff through the slot in the wing frame and into the pivot hole in the stay wing. Secure into place by screwing a 4-40x1/2” screw with a #4 washer through the standoff and into the stay tie. Repeat for the other stay wing.

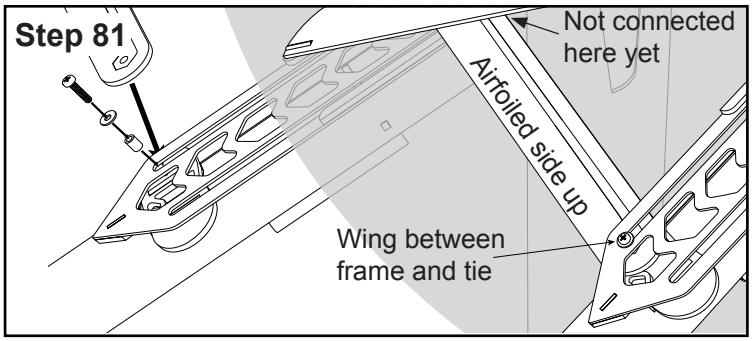

82. On each side, insert one of the shorter 5/32” standoffs into the pivot holes at the tips of each main wing, then using a 4-40x1/2” screw and washer, secure the main wing and stay wing together, with the stay wing underneath.

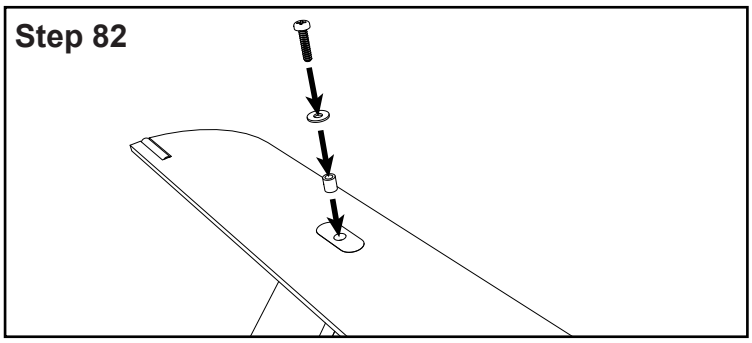

83. Once the main wings are securely attached at the root, and the stay wings are connected to the main wing (at the tips) and the stay tie (at their root location), check for correct operation by extending and retracting the wings. To do this, slide the stay tie forwards and aft along the track. The wings should function with very minimal friction thanks to the clearance provided by the spacers. If there is any binding, locate its cause and adjust the joint by sanding or shaping the component that is rubbing.

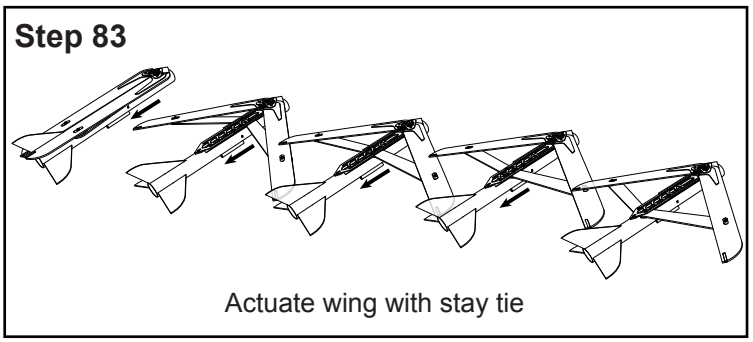

84. Slide the stay tie forward until the wings are almost fully retracted and the triangular loop in the stay tie is reachable in the large gap of the wing frame. Loop the rubber band through the loop in the stay tie and then back through itself to secure it to the stay tie.

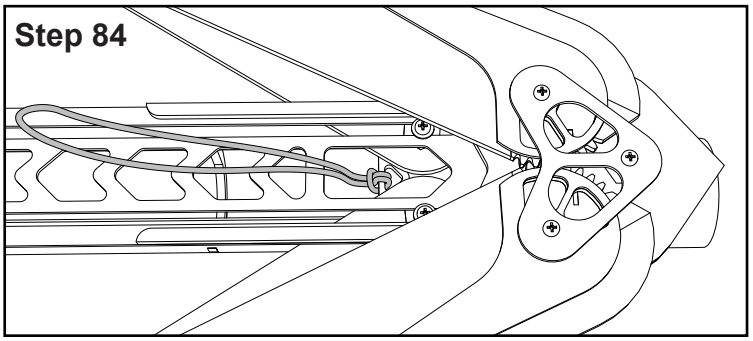

85. Push the rubberband down into the fuselage, then slide the stay tie all the way to the aft (extending the wings all the way) to allow access to the rubber band from the back of the fuselage.

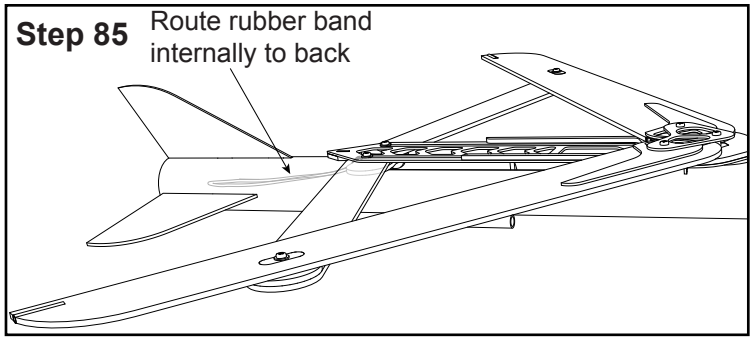

86. Pull the rubber band out the back of the fuselage and while holding it secure with one hand, route the end of the rubber band through the loop in the boat tail. Then, pull the loop around the boat tail so that the rubberband forms a knot around the loop and is secured in place. Release the rubberband and install the boattail into the aft end of the fuselage. With the wings fully extended, the rubberband will have very little tension on it. This is by design. During wing extension, the stay wings cross beyond a right angle at which point the drag forces on the main wings work to lock the wings in the extended position rather than retracting them.

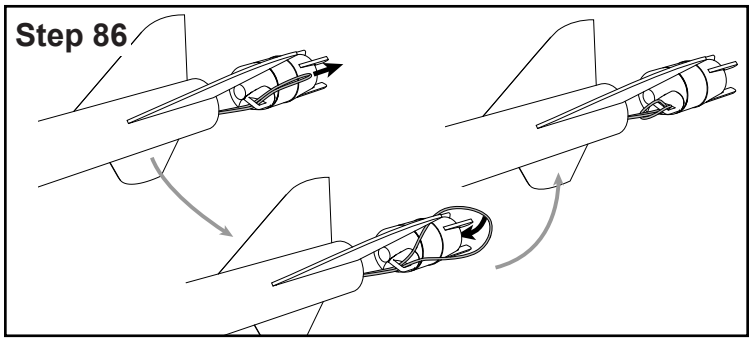

87. At this point, once the booster is added, the Draco BG is physically complete, but the glider must be trimmed for correct flight before it can be launched under power.

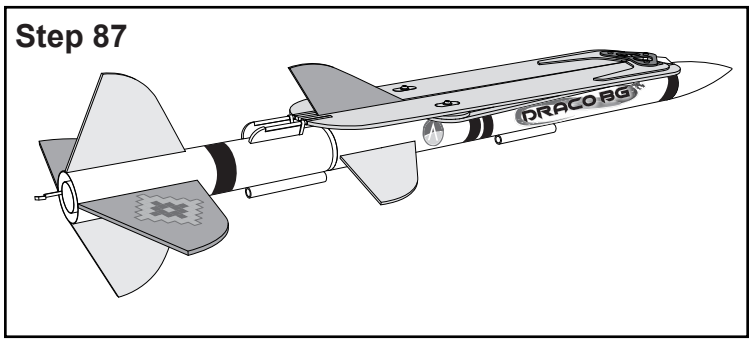

Trimming:
Due to variation in material density as well as the exact airfoils created during construction, the glider needs to be trimmed for a proper glide. This is done by balancing (both front to back and side to side) by adding clay ballast. An approximate range for the center of gravity is marked on the plywood main wing frame with a line at the forward and aft limits. The best glide balance will shift slightly within the reasonable range. Until proper trim is achieved, any ballast clay can be placed on the outside of the glider for easy access, then moved inside the nose cone or boattail when correct balance is achieved. Also note that the included clay should be much more than is required to correctly trim the glider. If a large proportion of the clay is used, recheck the orientation of the wing airfoils as well as the angle of the horizontal stabilizers for any assembly errors.

88. Make sure the booster is removed. With the wings fully extended in their flight position and the rubber band and nose cone installed, check the lateral (side-to-side) balance of the glider by balancing it with one finger at the tip of the nose, one inside the lip of the boattail, and the wings facing down toward the ground. If one wing tip drops in relation to the other, add a small quantity of clay to the tip of the opposite wing. On either the top or bottom, add clay until the glider sits level.

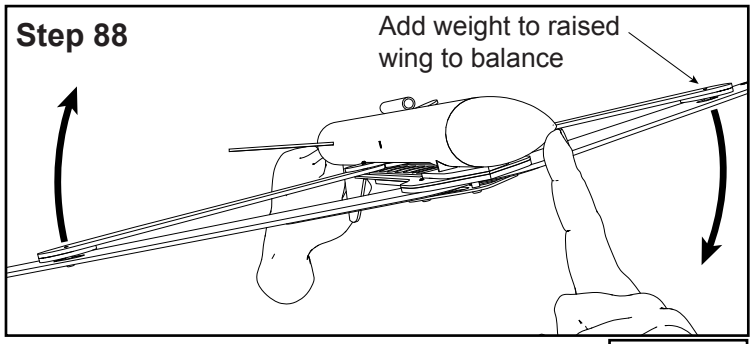

89. Next, add clay to the nose cone or boattail to get close to the correct initial longitudinal (front-to-back) balance. This is achieved when the glider balances at roughly the middle of the recommended range shown on the wing frame. Test balance by placing a finger on the wing frame on either side of the fuselage.

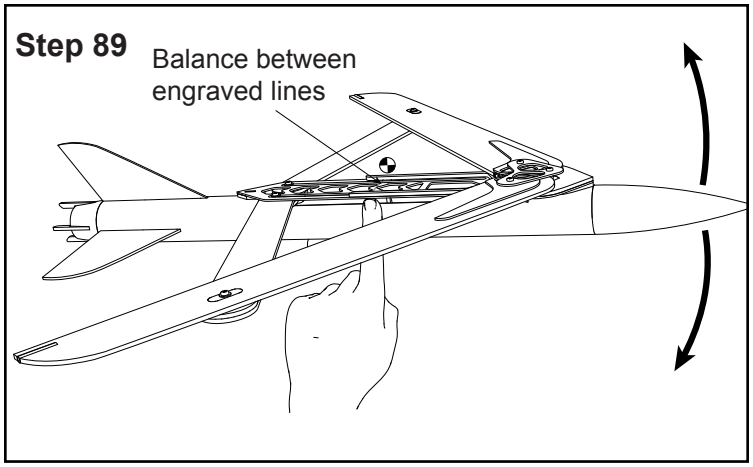

90. Once the glider balances – front to back – at approximately the center of the recommended range and it is even in the lateral axis, the glider is ready for glide testing. To do a glide test, toss the glider forward and level. It is best to do glide testing in still conditions, but if there is a breeze, test directly into the breeze. If the glider fails to go straight and turns (or falls) to one side instead, check that the glider is assembled straight and if it is, try the test again giving it a little more speed when doing so. Adjust trimming for descent rate first. A glider that continues straight and descends slowly is correctly trimmed and you can continue to the next step. A glider that pitches down toward the ground has too much weight toward the nose. If there is weight on the nose, remove a small amount. If there is no weight on the nose, add weight to the boattail. After adjusting the weight, rerun the test. A glider that climbs rapidly and then falls back down (a stall) or simply flies with the nose noticeably elevated relative to the rest of the craft has too much weight toward the tail and it requires either reducing weight on the tail or increasing weight on the nose. Continue doing glide tests and adjusting the weight distribution until the glider is able to follow a gentle glide slope reliably.

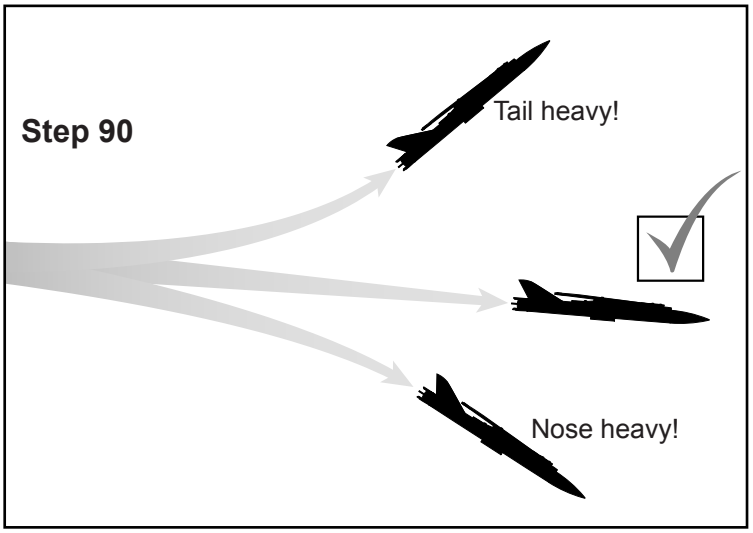

91. Once the descent rate of the glider is trimmed, ensure that the glider glides with just a slight turn to one direction by adjusting the lateral (side-to-side) balance. If the glider is going straight and one wing tip has weight on it, that weight can be removed to turn in the opposite direction. The glider should not turn quickly as such a flight is more likely to result in a quick descent and damage. A perfectly straight flight, however, despite being impressive in its own right, can easily fly out of sight and result in the loss of the glider.

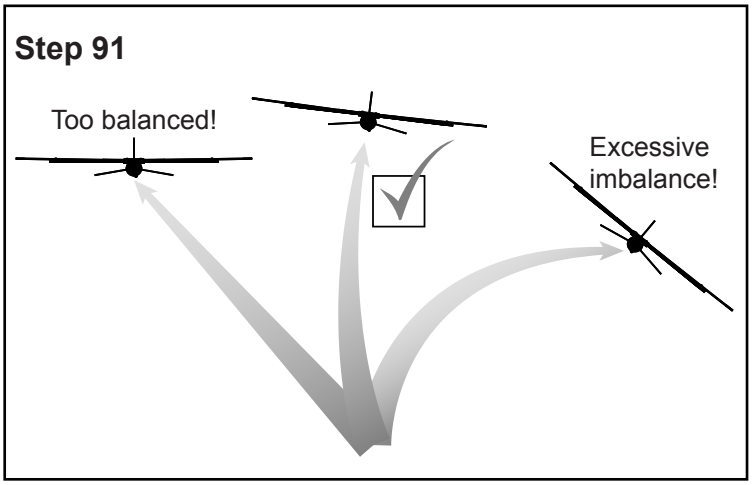

92. After tuning the glider for an appropriate turn, recheck that the descent rate is correct using the procedure in step 90 and adjust as needed.

The Draco BG is now ready for flight!

Manufacturer	Model	Type	Altitude (ft.)	Altitude (m)
Estes	C11-3	SU	124	38
Estes	D12-3	SU	298	91
Aerotech	D15T-4	Reloadable	403	123
Quest	D22W-4	SU	395	120
Estes	E12-4	SU	553	169

Launch Supplies Needed

To launch your rocket you will need:

- A launch pad with a 1/4” (3 mm) launch rod and a launch controller that can handle the selected igniters
- Recovery Wadding
- Engines such as those recommended in the motor chart. Additional motors can be viewed at: **https://www.apogeerockets.com/Model-Rocket-Kits/Skill-Level-5-Model-Rocket-Kits/Draco-BG#motors**

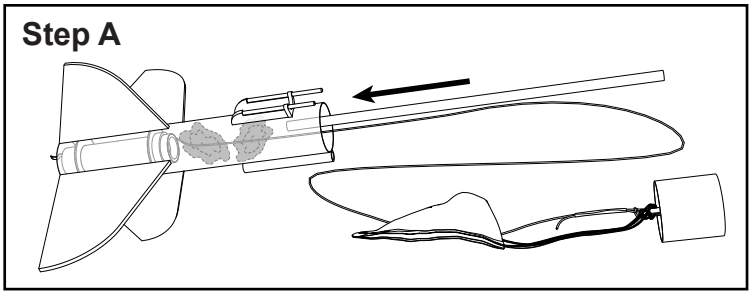

Rocket Preflight:

A. Crumple and insert 3 or 4 sheets of recovery wadding into the booster tube, then push them to the bottom with a dowel.

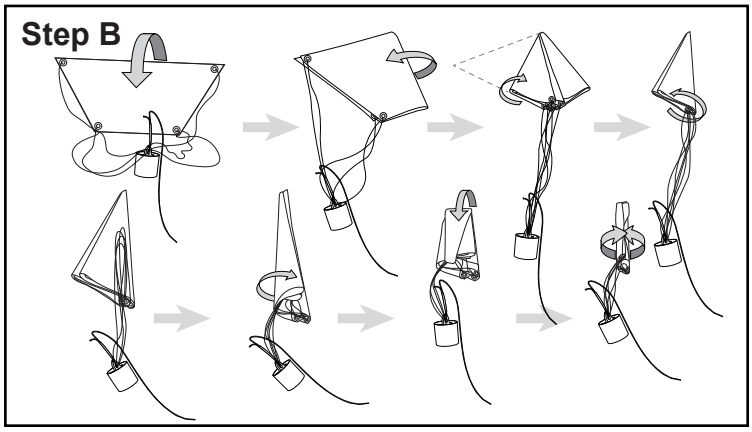

B. Fold the parachute so that the shroud lines all come together, then place the shroud lines onto the parachute in a loop and fold the parachute in half long ways to surround the shroud lines. Fold the parachute again – this time the other way – to shorten the whole package.

C. Loosely fold the shock cord and insert it into the booster body tube, followed by the folded parachute, and the piston. Leave the piston sticking out of the booster tube slightly so that mounting the glider pushes the piston to the correct depth.

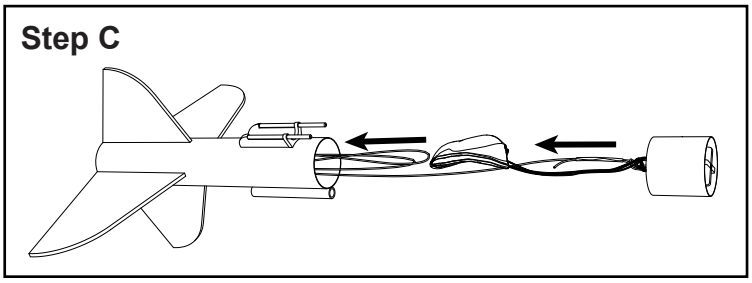

D. Install the motor by sliding it into the motor mount tube and clipping the engine hook around the end to prevent the motor from blowing out when the motor’s ejection charge fires. If using a short 24 mm motor without a thrust ring (such as an Estes C or D) a spacer will be necessary.

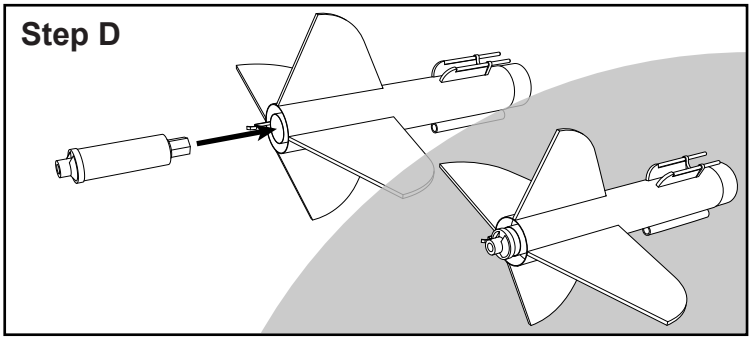

E. Insert and secure the igniter as directed by the motor’s manufacturer. To improve the chances of the rocket motor igniting correctly the first time, ensure that the igniter is in contact with the propellant.

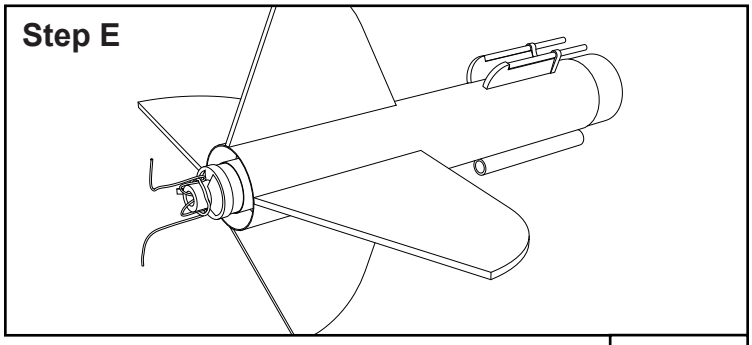

F. Gently slide the glider's wings back by pulling the stay tie toward the nose of the glider and then press the wings together at the back. Prepare to align and mount the booster.

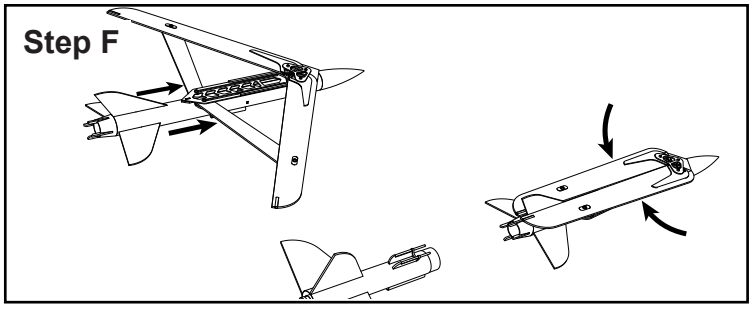

G. Mount the glider onto the booster by sliding the boattail into the piston and aligning the wing lock pins with the tubes on the wing tips. Once the piston and wing locks are aligned, press the glider so that the boattail contacts the booster tube. The glider should be rigidly attached to the booster with little or no wobble. If there is significant play in the joint, ensure that the piston is a good fit within the booster tube and that the alignment vanes are a tight fit within the piston. The piston can be made tighter by adding tape to its outer surface. Meanwhile, if there is play between the boattail and piston, the inside of the piston tube can be built up with thin CyA adhesive (taking care to allow the adhesive to fully harden before assembling again to prevent gluing the piston and boattail together!).

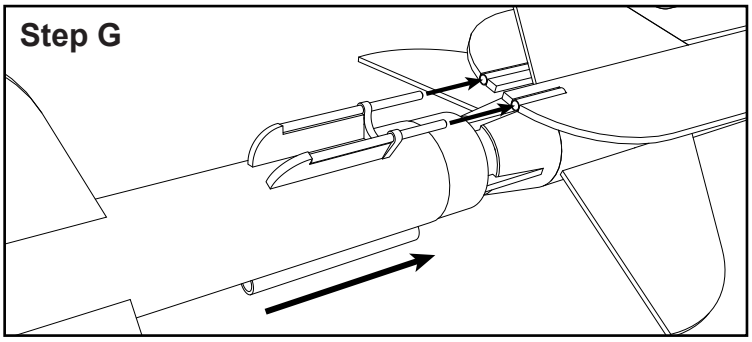

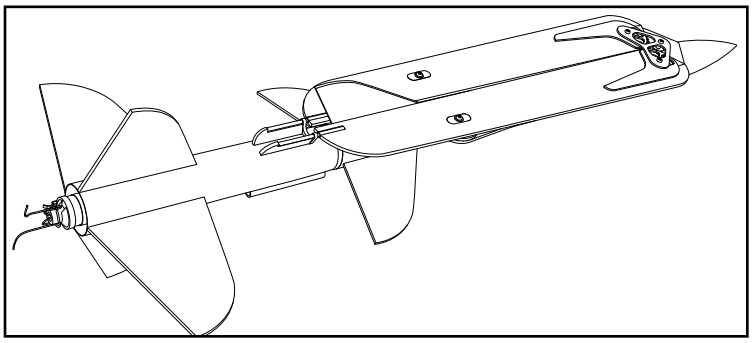

The Draco BG is now ready for flight.

Countdown and Launch Procedure

The Draco BG is a fairly low flying rocket that is highly affected by wind so it should be flown in low wind or on still days whenever possible. Even then, it is preferable to fly on a large field as a glider can easily travel a long way if not trimmed for a spiraling glide. The safest motors to fly this rocket on are of moderate thrust and total impulse (generally D class motors) as a higher boost gives the glider the longest possible time to enter a stabilized glide. Due to its relatively high flight speed, the Draco BG glider takes some time to transition into a glide. However, a high boost also can lead to exceptionally long walks in the worst case, so large motors should be used with caution! An ideal field will be grass covered with minimal low brush and trees to reduce the chances of damage being done to the glider on landing. The launch area should be free from dry grass and other fire hazards and the pad should be as far from trees, powerlines and low-flying planes as possible.

1. Remove the safety key from the launch controller (if it has been stored there).
2. Place the rocket on the launch pad. The rocket should slide freely along the rod.
3. Attach the clips to the igniter wires. The clips must not touch either each other or the metal blast deflector. Otherwise, a misfire is likely.
4. Stand back from the rocket as far as the launch wire allows.
5. Insert the safety key to arm the launch system.
6. Give a loud countdown! 5… 4… 3… 2… 1… LAUNCH
7. Press and hold the button until the engine ignites. Once the rocket is away, remove the safety key.

Misfire Procedure

A misfire is when an engine does not light after the launch button is pressed. This is sometimes a result of the igniter burning but failing to light the engine. At other times, the igniter will not burn at all (this is often indicative of a short between the clips). To deal with a misfire safely, remove the safety key from the launch controller and wait a full minute (60 seconds) prior to approaching the pad. Check that the igniter wires or clips were not touching and causing a short. If they were, the short can be corrected and a launch attempted again. If the engine simply failed to light, remove the old igniter and install a new one. Make sure that the igniter is installed all the way into the engine and that it is in contact with the propellant. Always follow the NAR (National Association of Rocketry) Model Rocket Safety Code when launching model rockets.