NIKE HERCULES

LAUNCH HISTORY. MASTER YOUR CRAFT.

Kit #05071
Skill Level 5

Produced In USA

Required Tools:

- ☐ Hobby knife with sharp blades
- ☐ Razor saw
- ☐ Ruler
- ☐ Pencil
- ☐ Wood glue
- ☐ Medium and thin CyA adhesive (super glue)
- ☐ 15-minute epoxy
- ☐ Masking tape
- ☐ Wood filler (for crack filling)
- ☐ Sanding sealer (for grain filling)
- ☐ Modeling filler (for plastic)
- ☐ 1/16”, 5/32”, and 3/16” Drill Bits, with a Hand Drill
- ☐ Cotton Swabs (Q-tips)
- ☐ Small (1/16” - 1/8”, 1.5mm-3mm diameter) dowel, or knitting needle with a rounded tip
- ☐ Coarse, medium, and fine sandpaper (80 grit, 220 grit and 400 grit)
- ☐ Sanding block (such as the Apogee Sanding Tee P/N 02100)

Optional Tools / Materials / Finishing Supplies:

- ☐ Filled Epoxy (or thickened epoxy)
- ☐ Paper Towels
- ☐ Lacquer Clear Coat
- ☐ Acetone (for degreasing)
- ☐ Spray Paint
- ☐ Detail Paint (for brushes)
- ☐ Paint Brushes
- ☐ Needle File Set
- ☐ Rotary Tool w/carving bits, and abrasive cutoff wheel
- ☐ 1/4” Wood Dowel

Skill Level 5

Advanced Skills Needed

Relive the technological explosion of the Cold War era with our stunning, 1:10.25 scale model of the legendary Nike-Hercules missile—a true symbol of American defense and technological prowess. This meticulously crafted replica isn’t just a static display piece (though it excels at that too); it’s a fully operational rocket that can soar through the skies on mid-power or high-power engines. With a powerful cluster of two or four motors in the booster and advanced electronic staging for the upper stage, this model delivers an awe-inspiring flight experience that echoes the historical might of the original Nike-Hercules system.

Designed to capture the essence of a missile that once stood as a guardian of freedom, this flying model is a tribute to a time when global tensions reached new heights, and technological innovation was crucial to national security. Whether you’re a history enthusiast, a rocket hobbyist, or someone who appreciates the significance of Cold War artifacts, this Nike-Hercules scale model will transport you back to an era where the skies were a battleground. Every launch was a statement of strength. Prepare for a thrilling journey into the past as you ignite this iconic missile and watch it blaze a path toward the heavens!

Manufactured in the USA by:
Apogee Components Inc.
Colorado Springs, Colorado, USA
www.ApogeeRockets.com

Instruction Sheet A: P/N 31284 *Updated 03/18/2024

NIKE HERCULES

Kit #05071
Skill Level 5

Produced In USA

MIM-14B Nike Hercules Parts List

Item #	Item Name	Qty
09184	Simple Switch with 4” Wires	1
10001	4mm x 16” Paper Artstraw	1
10116	Nike-Hercules Booster Tube C	1
10155	Nike-Hercules Booster Tube A	2
10156	Nike-Hercules Booster Tube B	2
10157	AT-29/13” (Nike-Hercules)	1
10223	Nike-Hercules Main Body Tube LC	1
10255	AT-29/6.5”	4
12361	CBD-41.6mm 1/8” Plywood (single) LC	1
13061	Rail Button Airframe Type (individual)	2
13065	6-32x3/8 Flat Phillips Machine Screw Zinc (for rail buttons)	2
13066	Weld Nut for 1010 Rail Button (single)	4
13075	Removable Plastic Rivet	1
13124	AC-41.6 (Nike-Hercules) LC	2
13126	AC-74/6” (Nike-Hercules) LC	1
13306	CR-29/41.6 Cardstock (Rectangle 2/sheet) LC	4
13378	CR-29 (Thick Wall)/38 1/4” Plywood (single) LC	2
14000	#8 Flat Washer ZP	2
14263	1/8”x2.5” Wood Dowel	1
15505	Nike-Hercules Booster 1/8” Basswood Sheet	1
15506	Nike-Hercules Main Fin 1/8” Basswood Sheet	4
15507	Nike-Hercules 1/32” Ply Sheet	1
15508	Nike-Hercules 1/16” Balsa Sheet	1
15510	Nike-Hercules 3/32” Balsa Sheet	1
15511	Nike-Hercules 1/8” Balsa Sheet	1
17049	Nike-Hercules Boattail LC	1
19103	Nike-Hercules Booster Coupler Ends (set of 4)	1
19492	Nike-Hercules Nose Cone	1
24029	Brass Welding Rods 1.5 mm	1
24057	1/4” x 3” Adhesive Lined Heat Shrink Tubing	1
29093	24” Printed Nylon Parachute	1
29095	36” Printed Nylon Parachute	1
29186	Zipper Shield	1
29371	6”x6” Parachute Protector	1
29372	9”x9” Parachute Protector	1
29508	750# Kevlar x 12 feet	1
29520	300# Kevlar x 8 feet	1
29601	Clay Nose Wt 1 stick - Saturns (rcv in boxes)	1
29617	6-32 x 1 Pan Phil Machine Screw (PPMZ-6C-100)	2
30009	114 - .015” X .080” OPAQUE WHITE POLYSTYRENE STRIP	3
35547	Nike-Hercules Fin Alignment Guide	1
40090	Nike-Hercules Cardstock Sheet A	2
40091	Nike-Hercules Cardstock Sheet B	1
40092	Nike-Hercules Cardstock Sheet C	1

Item #	Item Name	Qty
40093	Nike-Hercules 1/16” Ply Sheet A	1
40094	Nike-Hercules 1/16” Ply Sheet B	1
40095	Nike-Hercules 1/16” Ply Sheet C	1
40096	Nike-Hercules 1/8” Ply Sheet	1
40097	Nike-Hercules Heavy Cardstock Sheet	1
41008	Nike-Hercules Decal Sheet (Waterslide)	1
70112	Nike-Hercules Detail Parts	1
72100	Nike-Hercules Interstage Body	1
72101	Nike-Hercules Interstage Base	1

History of the Nike-Hercules:

The Nike-Hercules missile was a key component of the United States air defense strategy during the Cold War, developed as an evolution of the earlier Nike-Ajax missile. Designed by Western Electric and the Douglas Aircraft Company, the Nike-Hercules was introduced in 1958 to address the growing threat posed by Soviet long-range bombers and, later, ballistic missiles. The missile’s design featured significant enhancements over its predecessor, including the ability to carry both conventional and nuclear warheads. This ability made the Nike-Hercules a versatile defense tool. It could engage high-altitude, high-speed aircraft at ranges of up to 87 miles (140 km) and at altitudes of over 100,000 feet, far exceeding the capabilities of the Nike-Ajax.

The Nike-Hercules was a two-stage, solid-propellant missile. The booster stage consisted of a cluster of four M5E1 (or later in production M88) solid-fuel rockets arranged in a cruciform pattern, which provided around 200,000 pounds of thrust, propelling the nearly 11,000 lbs (4990 kg) missile to supersonic speeds in seconds. Once the booster was expended, it was jettisoned, and the sustainer stage—a Thiokol M30 solid-propellant motor—ignited, continuing the missile’s flight toward its target. Thus boosted, the sustainer stage could achieve speeds up to Mach 3.65 (2,700 mph, 4345 kph). The missile was controlled by a command guidance system, where ground-based radar tracked both the target and the missile, feeding data to a computer that calculated intercept coordinates in real time.

The missile’s guidance and targeting system was an engineering marvel. The system relied on multiple radars,

Instruction Sheet A: P/N 31284 *Updated 03/18/2024

including target tracking, missile tracking, and range radars, all integrated into a computer that performed real-time calculations to guide the missile to its target. Once launched, the Nike-Hercules followed a predetermined trajectory until it neared the target, at which point the guidance system would make final course corrections. The missile could be detonated either by a proximity fuse when close to the target or by command detonation, allowing for precise control over the engagement, especially useful when the missile was equipped with an expensive nuclear warhead.

In operation, the Nike-Hercules system was deployed at over 130 sites across the United States and in various locations around the world, particularly in Europe under NATO command as well as in southeast asia. The missile batteries were typically arranged in clusters to provide overlapping fields of fire, creating a robust defense network capable of repelling massed bomber formations or missile attacks. While conventional high-explosive payloads were an option, the nuclear capabilities (with warhead yields up to 40 kilotons of TNT) gave the Nike-Hercules a unique tactical force. The nuclear option allowed for countering large formations of enemy bombers with a single missile.

As the nature of the threat evolved from bomber aircraft to intercontinental ballistic missiles (ICBMs), the relevance of the Nike-Hercules system began to wane due to its inability to target the much greater speed and agility of ICBMs compared to bombers. By the late 1970s, advances in missile technology and the introduction of more sophisticated defense systems led to the decommissioning of Nike-Hercules sites. Nevertheless, some countries, like Taiwan and South Korea, kept the Nike-Hercules in active service until the early 1990s. The missile's legacy endures in various museums and military installations: The National Museum of the United States Air Force in Dayton, Ohio; the Nike-Hercules SF-88 Site in Marin County, California; and the Air Defense Artillery Museum at Fort Sill, Oklahoma, are among the institutions that preserve Nike-Hercules missiles and launch systems, offering a glimpse into a pivotal period in military history and technological innovation.

For model builders, the Nike-Hercules offers an exciting opportunity to recreate a piece of this deep history. The missile's distinctive design with the characteristic large fins and powerful, clustered, booster stage – as well as functional staging – makes for a challenging and highly rewarding project. Whether as a historical exploration, a technical challenge, or for purely personal enjoyment, the Nike-Hercules brings us closer to a pivotal chapter in the history of aerospace technology and political intrigue.

VISIT OUT WEBSITE FOR FURTHER INFORMATION AND ASSEMBLY VIDEOS

A Note on Surface Details & Finishing

The Nike-Hercules kit is intended to be capable of being built as a museum-quality static model. As provided, however, some details were not included simply because they would have made the kit cost-prohibitive for those desiring a flying model; these missing details are generally easy for the modeler to replicate, though they are generally time-consuming. Details such as rivets, panel lines, and bolt heads are not included, but we have made every attempt to make their addition as simple as possible.

To begin, the cardstock surface details in this kit include markings for the location of rivets and bolts. While the kit does not include materials for creating these fine surface details, we intended to provide the interested modeler with as much information as possible to create a fully detailed model. To achieve a high level of detail, the surface of the model should be sealed and smoothed as completely as possible before applying rivet details. This preparation will minimize the difficulty in sanding and ensure that the rivets adhere properly and appear uniform.

There are various methods to apply rivets, such as: using small adhesive rivet decals, applying rivets made from plastic rod segments, or with drops of glue . What is most important is uniformity. For a more realistic effect, consider using a large riveting tool to emboss rivet patterns into the surface. Especially for rivets that are not marked on the parts, careful attention should be paid to the alignment and spacing of these details to enhance the authenticity of the model. All marked rivets and bolts are either solid black, or unfilled. Solid black rivets are of the flush type and should be extremely subtle if added at all. The raised rivets (and bolts) are drawn as unfilled shapes and should be noticeably raised for proper scale effect.

Weathering can be another crucial step to give your model a more realistic appearance. Weathering adds depth and character by simulating the effects of the environment over time. Techniques such as dry brushing with lighter or darker shades, applying washes to accentuate panel lines and rivet details, and using weathering powders to replicate dirt, grime, or rust can all contribute to a more lifelike finish. Experiment with these techniques to find the right balance that suits your desired level of realism.

www.ApogeeRockets.com/Nike-Hercules

MORE HELP?

Feel free to check out our YouTube video series for a step-by-step walkthrough of the Nike Hercules Assembly, with bonus tips and tricks throughout the build process.

The paint scheme of the model is crucial to its appearance. The kit instructions focus primarily on a standard white and Olive Drab paint scheme, which was typical of operational Nike-Hercules missiles used by the US Army. This classic color scheme is visually striking but, despite being only two primary colors, can present many painting challenges. For best results, follow a well-structured painting process: start with a primer coat, then apply the base colors, and finally add any additional details or accents.

While we believe that the livery demonstrated in these instructions is an excellent choice for your Nike-Hercules, the missile has been seen in a variety of paint schemes, both in operation and for display purposes. If an alternate livery, such as those with additional markings (camouflage patterns or unique color variations) is chosen, it is recommended to carefully plan the painting sequence before starting assembly as the Nike-Hercules benefits from some amount of painting during the assembly process. Complex schemes might require masking and layering techniques to achieve clean and sharp transitions between colors. Be prepared to adjust your approach based on the specific details of the chosen livery.

Livery Reference

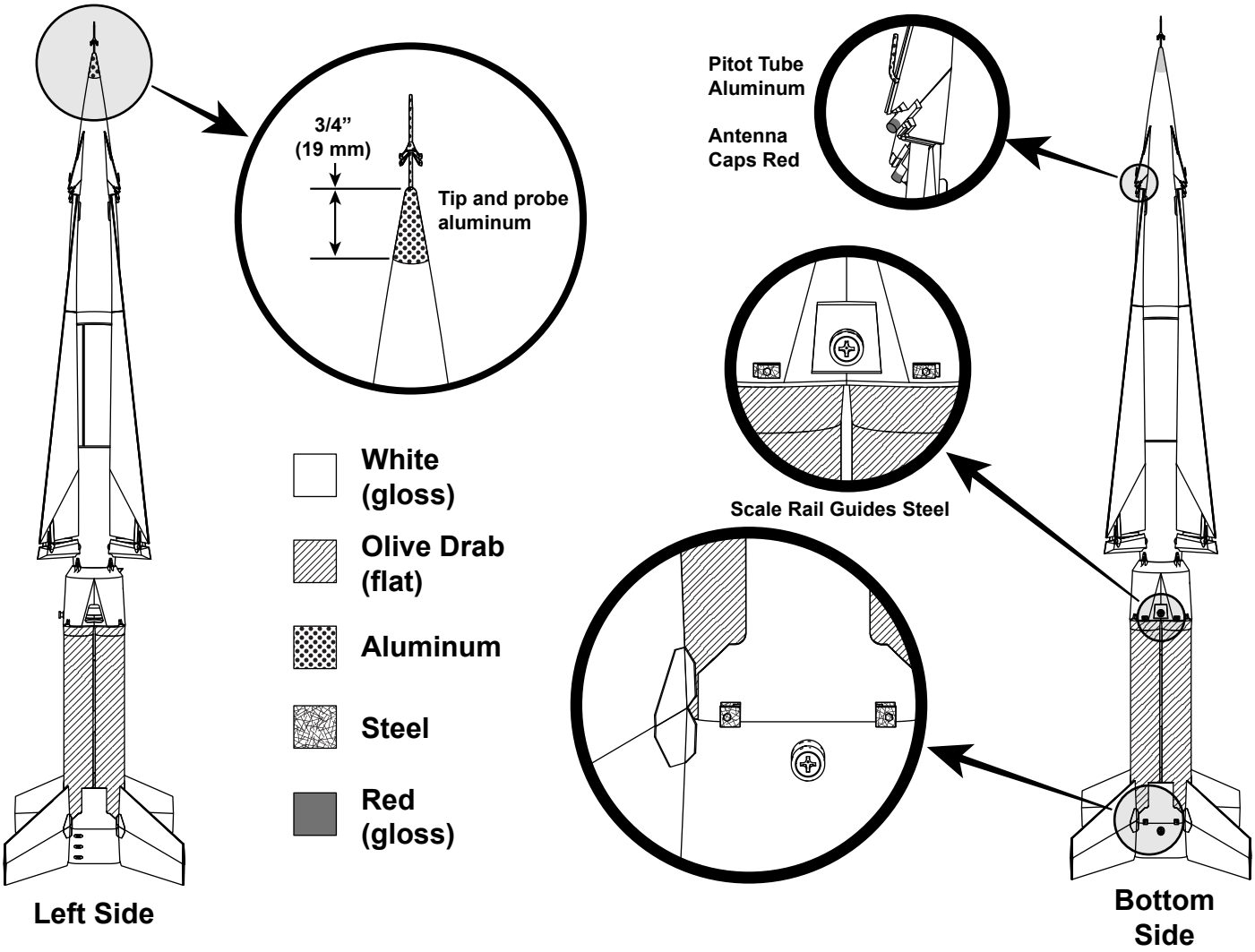

Nike Booster Exploded View

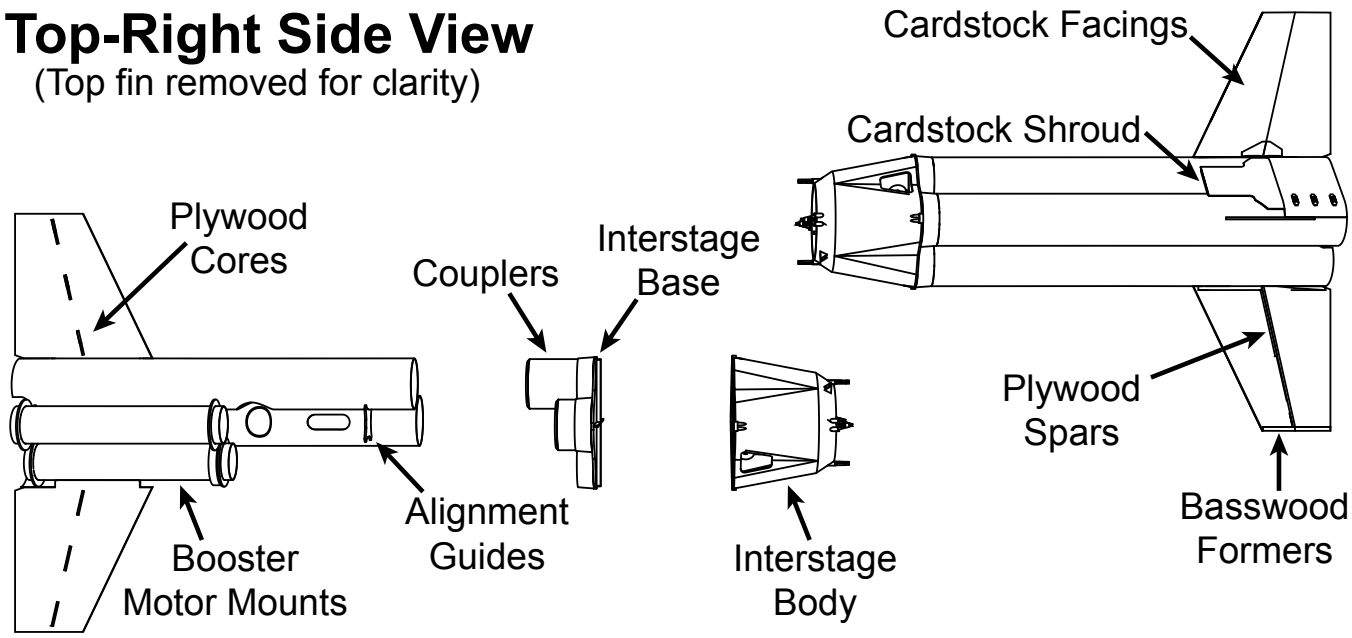

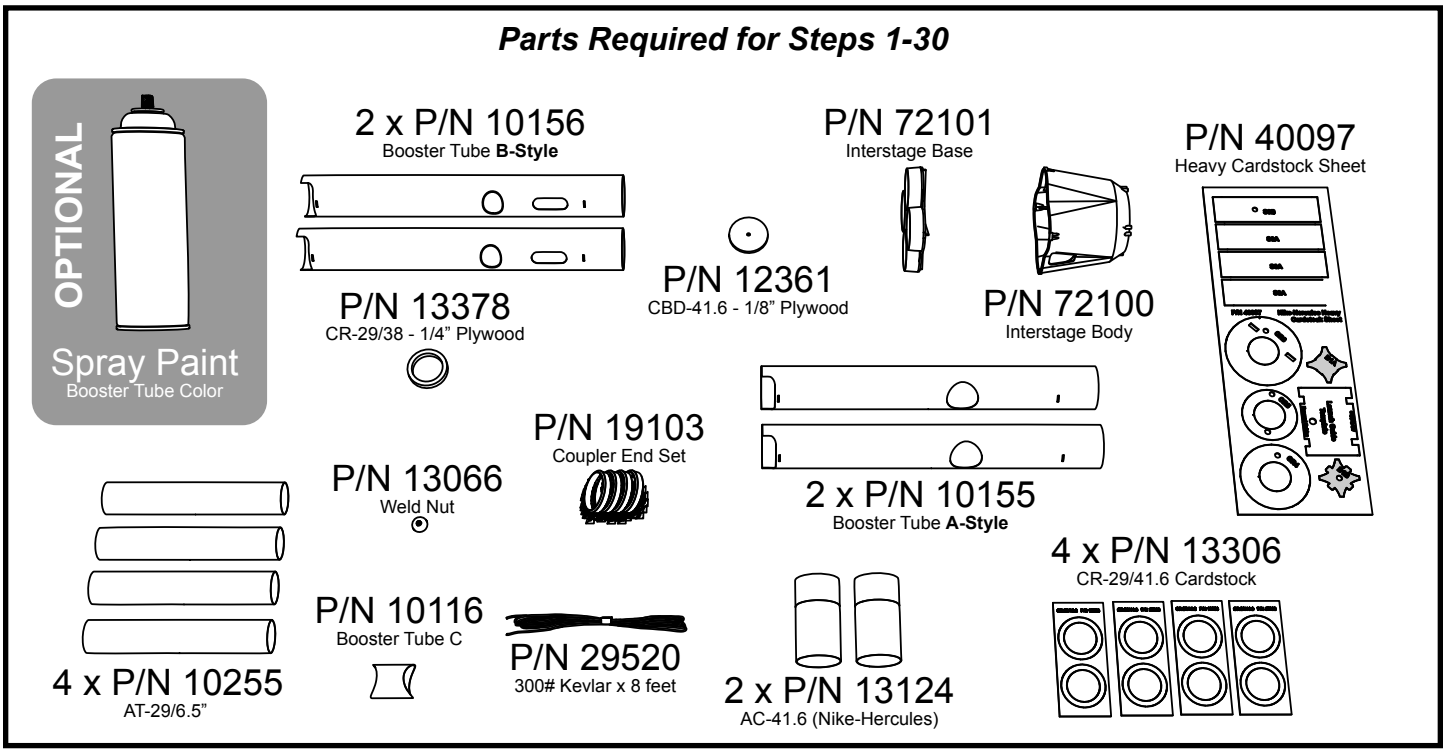

Nike Booster Cluster Assembly

☐ 1. Use a pencil and ruler to mark the four booster motor mount tubes (AT-29/6.5") at 1/4" (6 mm) from both ends of the tube.

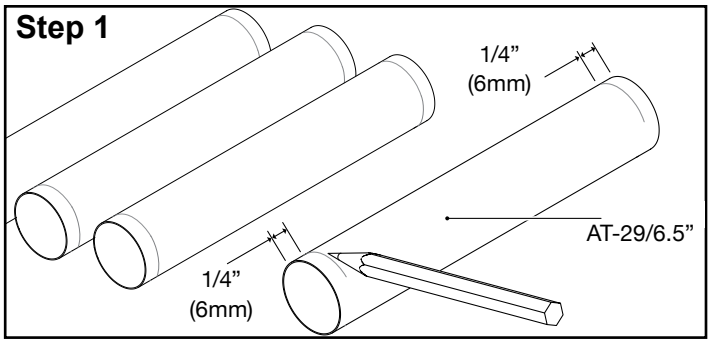

☐ 2. Remove the eight CR-29/41.6 centering rings from the heavy cardstock rectangles (P/N 13306) and gently sand the rings to remove any remnants of tabs on both the interior and exterior of each ring.

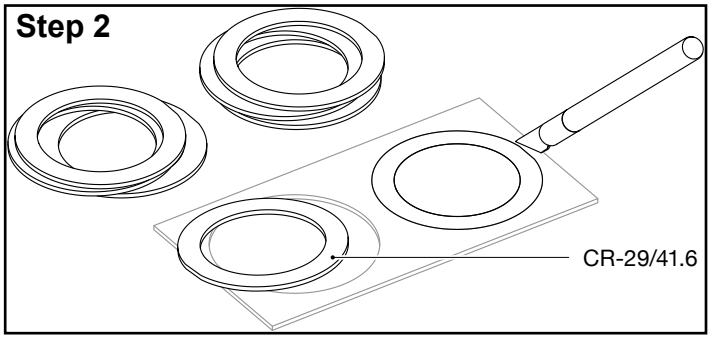

☐ 3. Use wood glue to glue a centering ring on either side of each of the three motor mount tubes to create simple motor mounts.

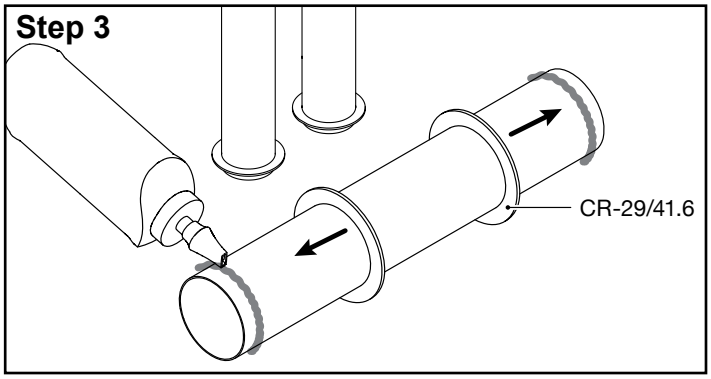

☐ 4. Cut 12” (305 mm) off of the included 8-foot long section of 300# Kevlar shock cord (the lighter weight included in the kit) and set aside for step 25. On the fourth motor mount tube, tie the resultant 7-foot Kevlar shock cord around the middle of the tube. Ensure that the knot in the shock cord will not come undone by applying a small amount of thin CyA adhesive to the knot.

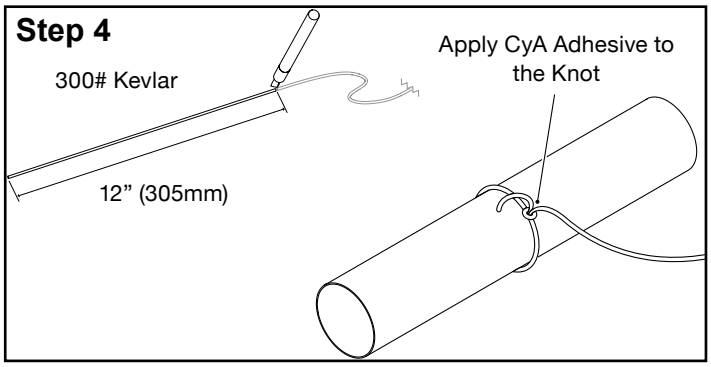

☐ 5. Apply wood glue around the tube and slide one of the 1/4” plywood CR-29/38 centering rings (P/N 13378) into place just to the inside of the 1/4” (6 mm) marking location.

Note: the centering ring will be somewhat loose on the tube, this is expected and does not affect the function of the ring as it is used to prevent the shock cord from pulling out, not for alignment.

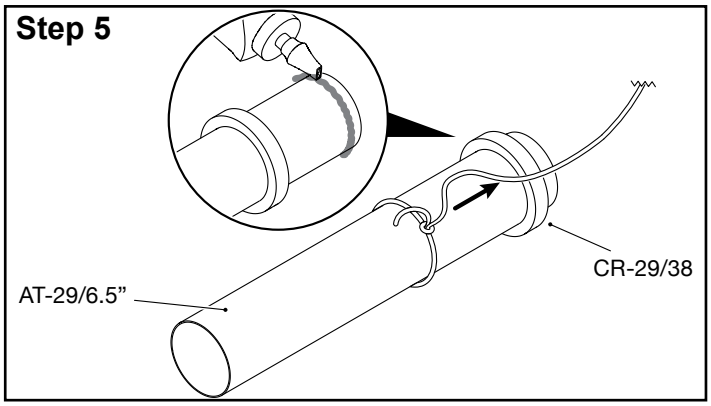

☐ 6. Apply additional wood glue to the forward surface of the plywood ring and to the motor mount tube and pass the shock cord through the center of one of the remaining CR-29/41.6 rings (P/N 13306). Install the ring at the marked location 1/4” (6 mm) from the end of the tube and pull both the plywood ring and shock cord loop tight against the cardstock ring to form a sturdy shock cord mount.

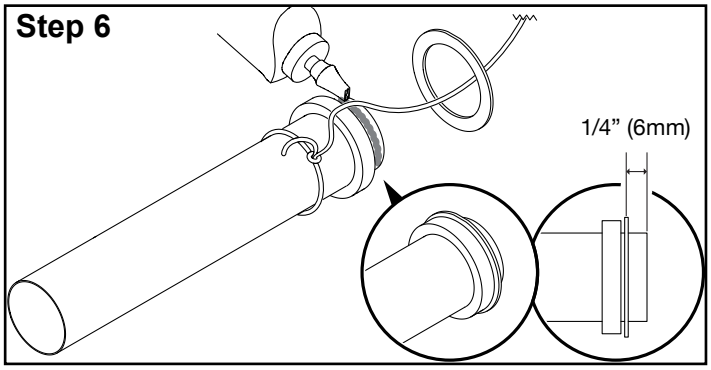

☐ 7. Wood glue the final CR-29/41.6 cardstock ring (P/N 13306) at the opposite end of the motor mount tube at the 1/4” (6 mm) mark.

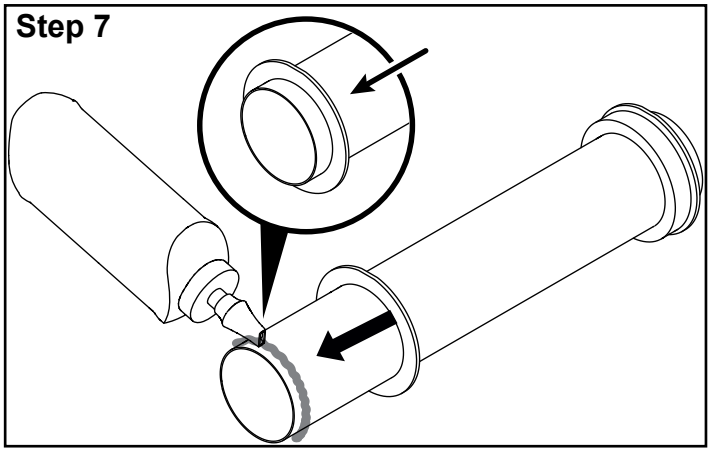

☐ 8. Ensure that the four motor mount tubes have full glue fillets on either side of the centering rings. To apply a fillet, run a bead of wood glue along the joint and smooth it using a fingertip. Allow the motor mounts to dry before installing them in the booster tubes.

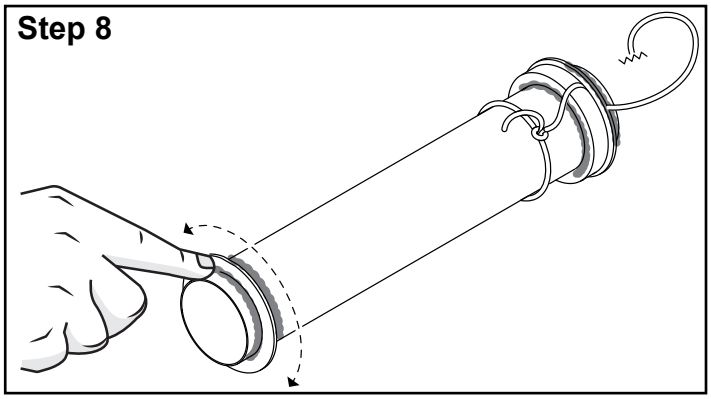

☐ 9. Fold the shock cord and stuff it into the motor mount tube. Hold it in place by crumpling up some paper towel and pressing it into the end of the tube to keep the shock cord protected during the installation of the motor mount.

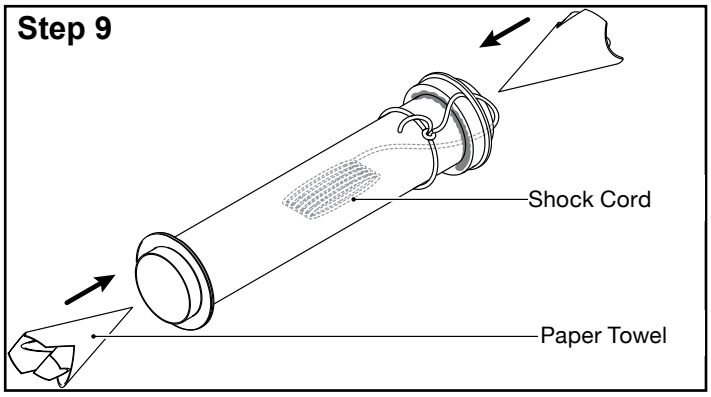

☐ 10. The motor mount with a shock cord must be installed into one of the two **A-style** booster tubes (P/N 10155). Select one of these tubes and use a dowel to apply rings of wood glue at 6” (150 mm) and 1/2” (13 mm) from the aft end of the tube (the end which is notched to clear the motor retention system). Install the motor mount with the shock cord exiting toward the inside of the booster tube and the aft centering ring just forward of the alignment frame slot. When installing, insert the mount at an angle so that the forward centering ring avoids the already applied aft ring of glue. Ensure that a fillet forms around the forward centering ring.

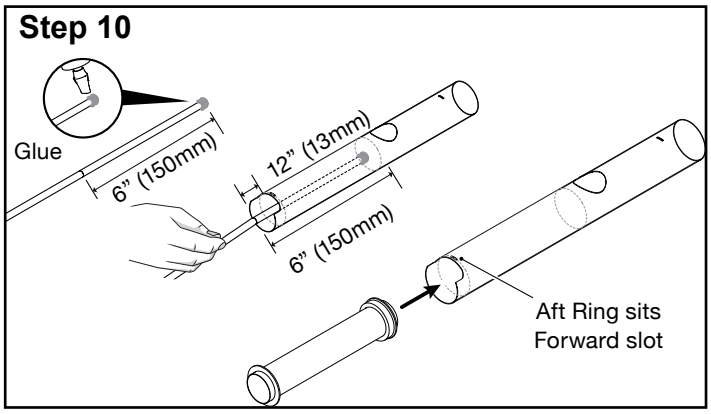

☐ 11. In a similar fashion, apply wood glue at 6” (150 mm) and 1/2” (13 mm) from the aft end of the remaining booster tubes and install the remaining motor mounts such that the aft ring is just forward of the alignment frame slots. Ensure that full fillets have formed on the forward rings.

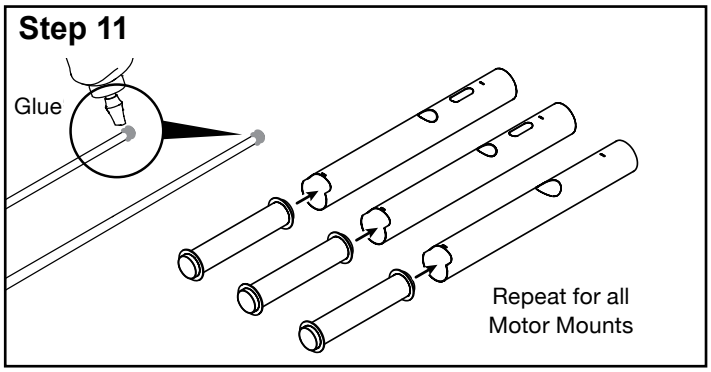

☐ 12. Fill the spiral grooves of all four booster tubes and sand them smooth using fine sandpaper (400 grit) to achieve a finish-ready surface on the tubes. The tubes should be smooth and have a uniform sheen. Flatten any remnants of tabs from laser cutting on the ends and cutouts.

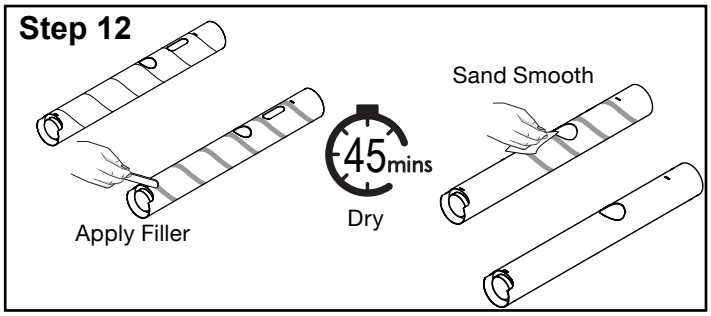

☐ 13. Remove forward and aft alignment frames (parts **B1A** and **B1B**) from the heavy cardstock parts sheet (P/N 40097) and, using medium CyA adhesive, glue a weld nut into the aft alignment frame **B1B** (the one with a hole in it and longer tabs around it).

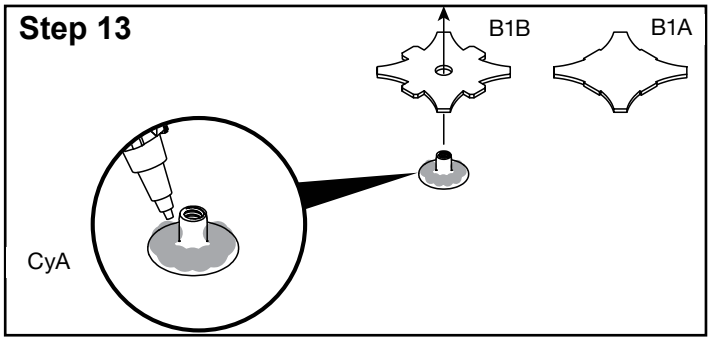

☐ 14. Separate the two AT-41.6 (BT-60) couplers into short and long sections along the laser-cut lines using a sharp hobby knife. **Without glue**, insert the long couplers into the forward ends of the **B-style** tubes and the short couplers into the two **A-style** tubes so that the couplers extend roughly 1/2” (13mm) out of the tube.

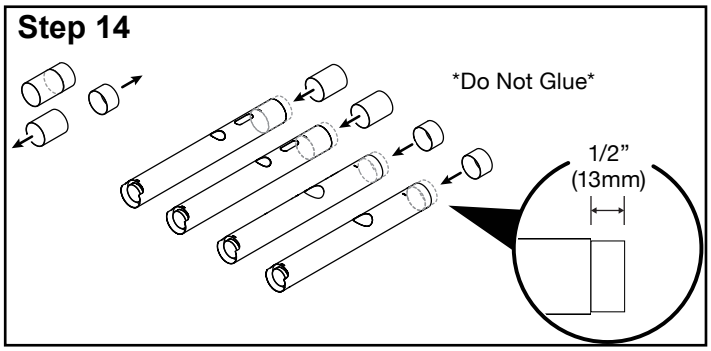

☐ 15. Sand a slight chamfer on each end of booster tube C – the short AT-29 tube with curved ends – using a medium sandpaper (220 grit) then slide it into one of the two **A-style** (recovery) tubes without applying any glue. This junction tube will be secured in Step 17.

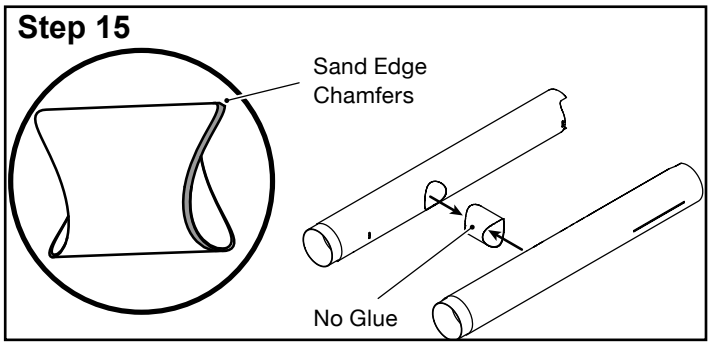

☐ 16. Apply wood glue on to two opposite sides of each alignment frame and assemble the two **A-style** (recovery) tubes so that they will be glued together opposite one another. The aft alignment frame **B1B** should be installed near the notch in the **A-style** tubes with the threaded portion of the weld nut facing out. Apply glue to the aft centering rings of the motor mount tubes so they adhere to the extended tabs on the alignment frame. The **B1A** alignment frame should also be installed in the forward slots. The junction tube remains **unglued** in this step. For better overall alignment of the frames, place the two **B-style** (passive) tubes in place **without glue** and slide the interstage base over the couplers. Once the tubes have been aligned, wrap the entire assembly with tape and set aside to dry completely.

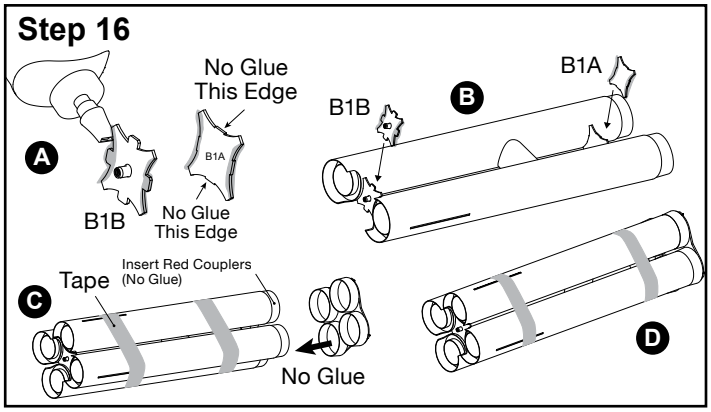

☐ 17. Once dry, remove the interstage base, the passive (**B-style**) tubes, and couplers. Carefully slide the junction tube so that it is centered between the **A-style** tubes and rotate it so that the engraved lines on all the tubes are aligned. Apply wood glue to the joint between the **A-style** tubes and the short junction tube. Ensure a solid fillet along the joint to fully seal the tubes together. In addition, apply additional fillets to the joint between the alignment frames and the **A-style** (recovery) tubes, especially on the extended tabs of the aft alignment frame, which need to hold up against the motor ejection charges.

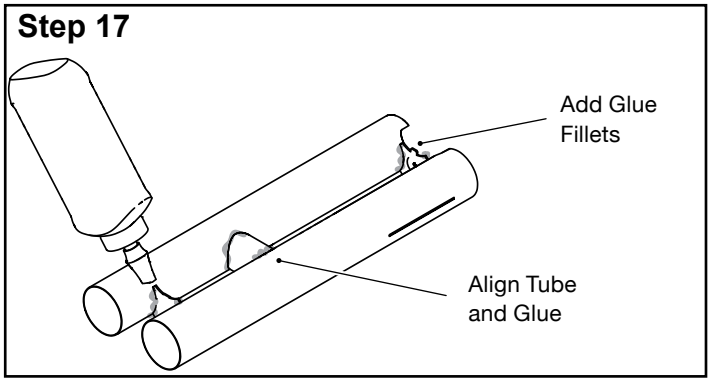

****These Steps are Optional for the Nike Hercules****

☐ 18. Due to the configuration of the booster, it is easier to paint the booster tubes before the final assembly is complete. To do so, follow the next several steps. First, mask the currently unused tabs on the alignment frames as well as the mounting slots in the B-style (passive) tubes. Also, mask an area 1-1/4” (32 mm) wide and 1-7/8” (48 mm) long at the base of all four of the tubes, centered on the fin slots.

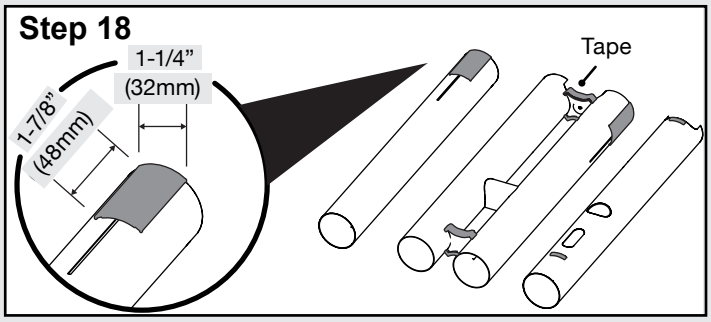

19. Apply primer to the four booster tubes (the two loose B-style tubes and the assembled A-style tubes) to prepare them for paint. Repeat the application of primer and sanding with fine (400 grit) sandpaper until a smooth surface is achieved.

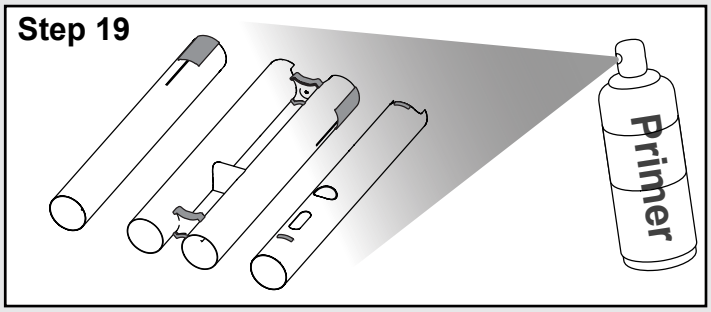

☐ 20. Apply the base color paint to the four booster tubes and allow them to dry completely.

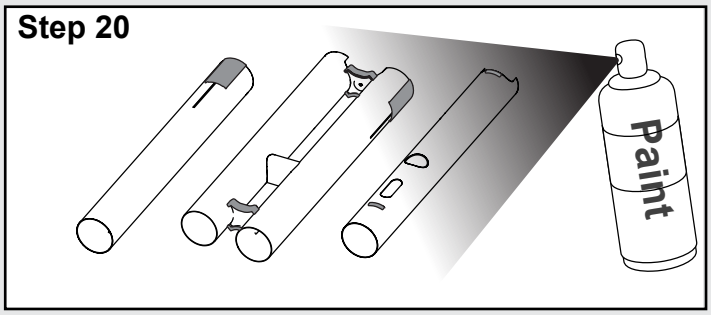

☐ 21. Remove the masking that was applied to the tabs and slots to allow further assembly.

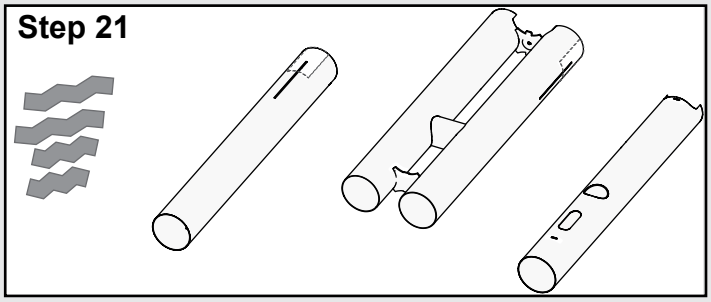

☐ 22. Use wood glue to attach the two **B-style** (passive) tubes on the sides of the previously assembled **A-style** tubes. In addition, medium CyA adhesive may be used to secure the **B-style** tube to the exhaust junction tube, though no seal is required and the rocket is plenty strong without this additional glue joint. As before, use the interstage base and couplers to ensure the assembly is correctly aligned, wrap in tape to hold position, and allow the glue to dry entirely.

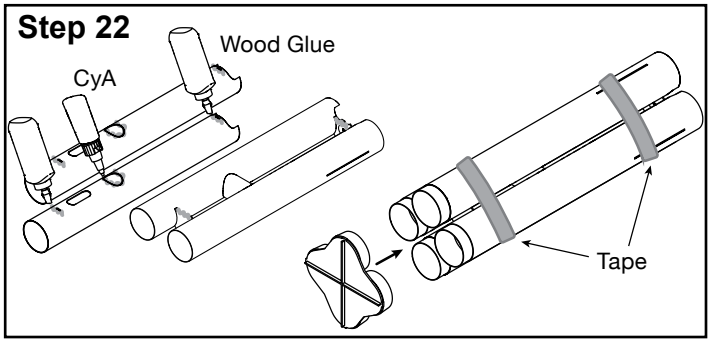

☐ 23. Once again, remove the interstage base and couplers from the tube assembly. Place the couplers in the interstage base, and use a pencil to mark around the coupler at the edge of the pocket 1/2” (12 mm) from one end of the couplers.

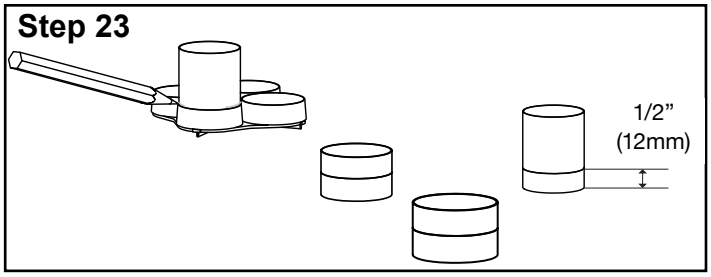

☐ 24. Use a sharp hobby knife to lightly score around the mark made on the couplers in the last step, and peel off the red surface layer of paper that would be exposed when installed in the interstage base. This will be roughly 1/2” (13 mm) width on the short couplers (it is half of the coupler), and a 1-1/2” (38 mm) width on the long couplers (3/4 of the red covering). Removal of the outer layer is important to ensure correct separation during flight as the increased friction of the four parallel couplers makes it more difficult to separate even when properly aligned.

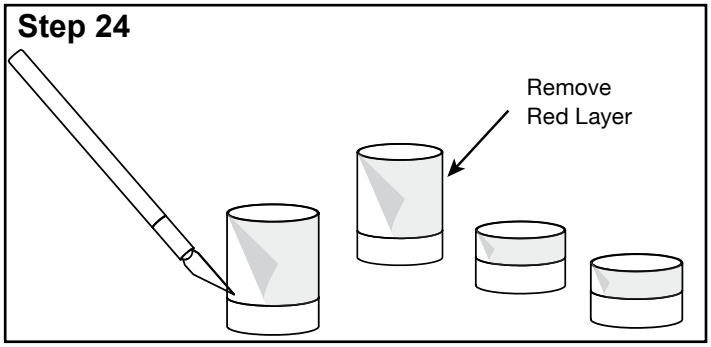

☐ 25. Take the remaining 12” (305 mm) section of 300# Kevlar (cut from the full section in step 4) and tie it into a loop with a knot at the end so that the tails are roughly 1” (25 mm) in length.

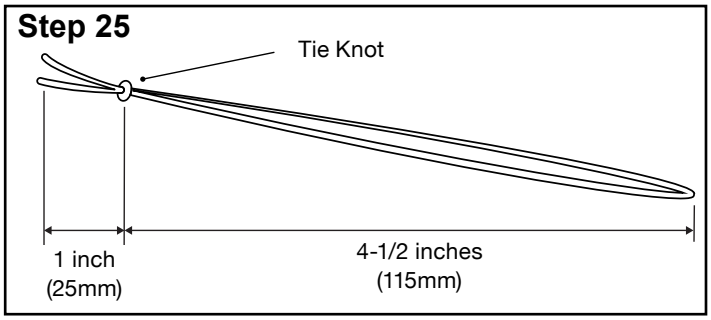

☐ 26. Pass the loop through the central hole in the CBD-41.6 (P/N 12361) bulkhead and pull until the knot is tight against the bulkhead surface.

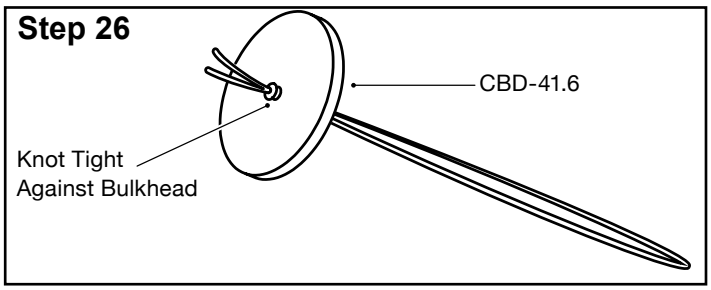

☐ 27. Using 15-minute epoxy, install the bulkhead (with Kevlar) into one of the long couplers approximately 1/4” (6 mm) from the forward end (with the red paper still in place) such that the Kevlar loop passes back through the coupler. Ensure that the bulkhead has a full fillet around the edge, and that the knot and tails of the Kevlar are fully coated so they will not pull out during recovery. Allow for the epoxy to fully set.

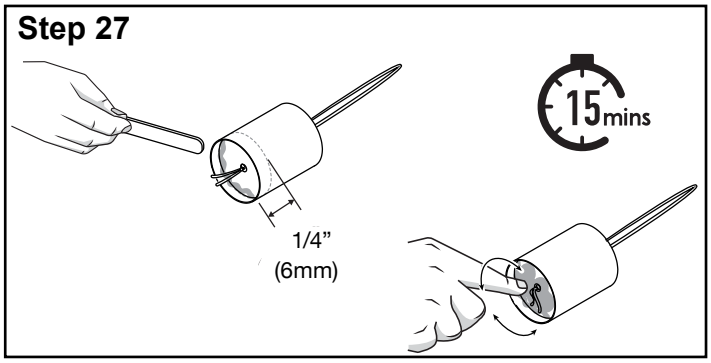

☐ 28. Install the 3D-printed coupler (P/N 19103) ends by first separating them from the support structure and then sliding the parts into the aft end of the couplers (the ends with the red paper removed). To remove the coupler ends from the support structure, gently squeeze the thin supports together to break the attachment off the rings, then pull the supports away from the parts. Secure the coupler ends in place by running a bead of thin CyA adhesive along the joint. Allow the CyA to fully cure.

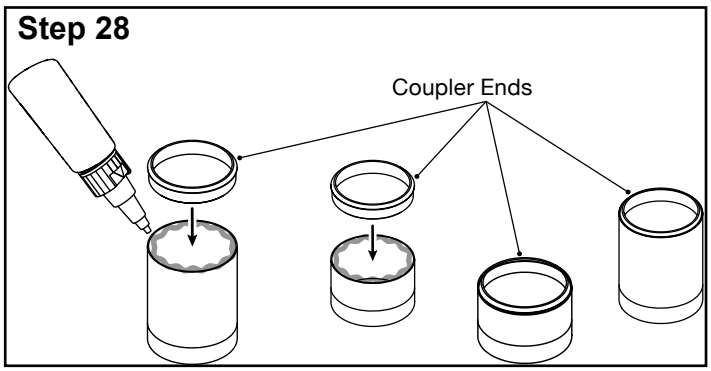

☐ 29. Once the epoxy and CyA are fully set on the couplers, they can now be installed into the interstage base. The assembled Nike booster tubes are used to ensure proper alignment of the four couplers, and 15-minute epoxy is used to allow sufficient time for assembly and alignment. To ensure everything fits properly, test fit (**without glue**) the four couplers in the interstage base. Sand the outside of the couplers if they bind in either the booster tubes or in the interstage base.

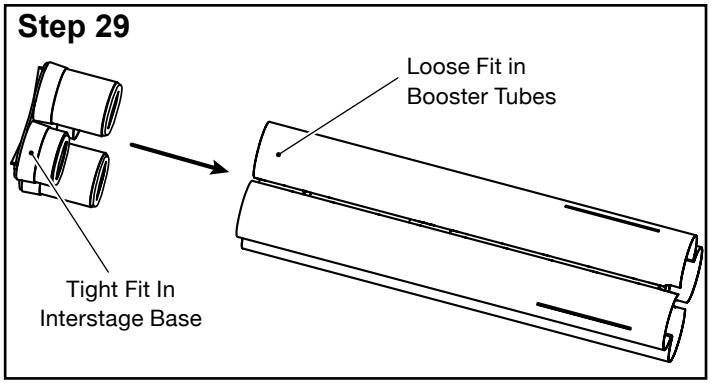

☐ 30. Apply 15-minute epoxy to the inside of the pockets on the interstage base, and install the couplers into place. Ensure that the two long couplers are diagonal from one another (same goes for the two short couplers), and take extra care to prevent epoxy from getting on the exposed coupler sections (remove any epoxy on the couplers with a cotton swab soaked dipped in isopropyl alcohol). Slide the assembled booster tubes most of the way onto the exposed couplers, leaving only a small (1/8” or 3 mm) gap between the forward end of the booster tubes and the interstage base to avoid accidentally gluing the parts together. Allow the epoxy to cure entirely.

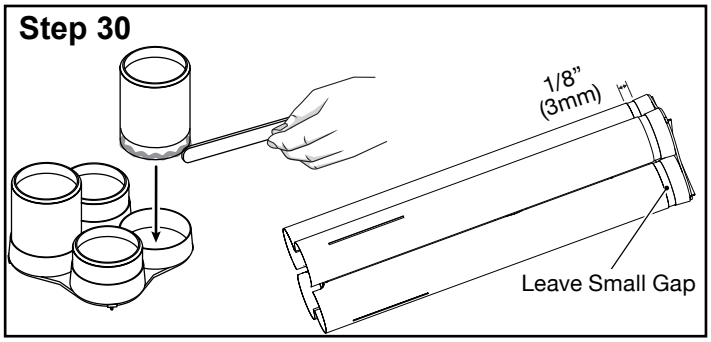

Parts Required for Steps 31-52

P/N 40095
1/16” Plywood Sheet C

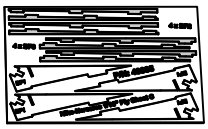

P/N 40091
Cardstock Sheet B

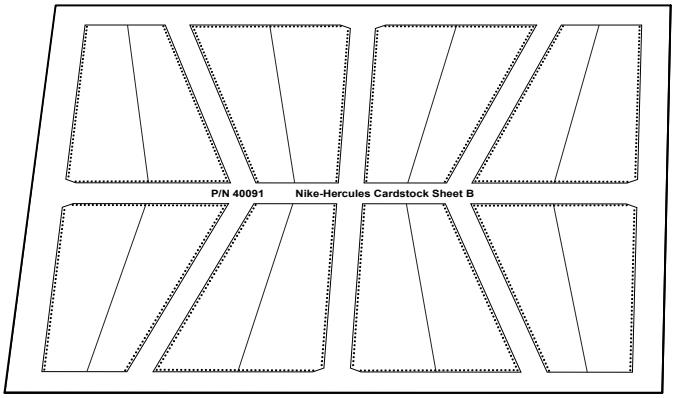

P/N 40094
1/16” Plywood Sheet B

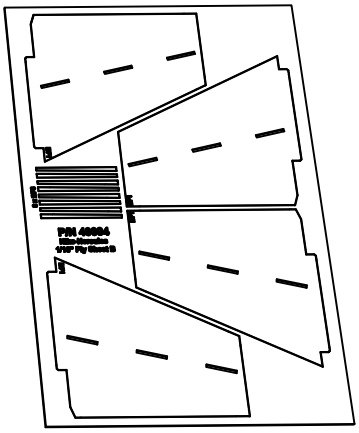

P/N 15505
Booster Fin Basswood Sheet

Booster Fins Assembly

☐ 31. Use a sharp hobby knife to remove the four Nike booster fin cores (labeled BF1) from the Nike-Hercules 1/16” Ply Sheet B (P/N 40094). Using medium sandpaper (220 grit), remove any tab remnants from the outside edges of the parts. With a pencil, mark a line along the root edge of the fin – aligned with the root on either side of the tab – on both sides of the core. While working on the first half of the fins, keep the fin as flat as possible by taping the fin cores to the work surface using a strip of masking tape in the middle of the leading and trailing edge of each core.

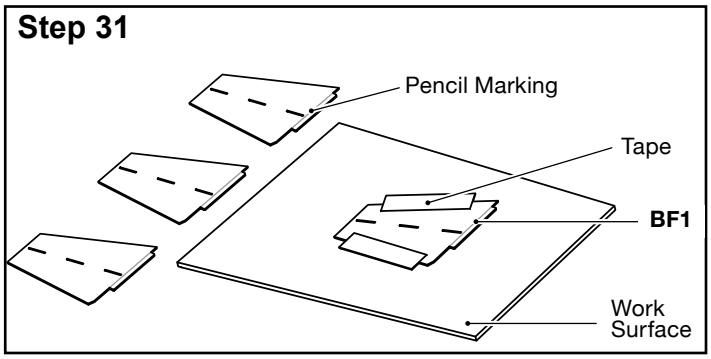

☐ 32. Remove the four **BF2** booster fin peak formers from the Nike-Hercules 1/16” Ply Sheet C (P/N 40095), and use medium sandpaper (220 grit) to remove the tab remnants.

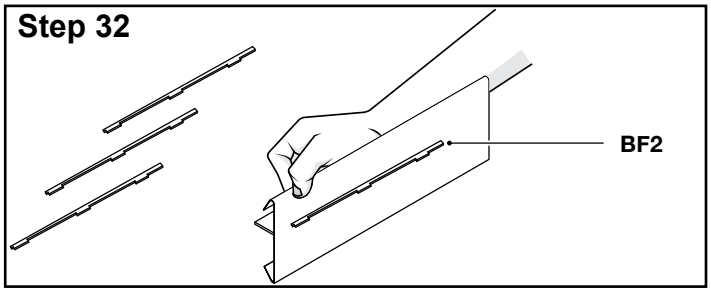

☐ 33. Glue the four **BF2** formers into the **BF1** cores using medium CyA glue, ensuring that the former is at right angles to the surface of the core.

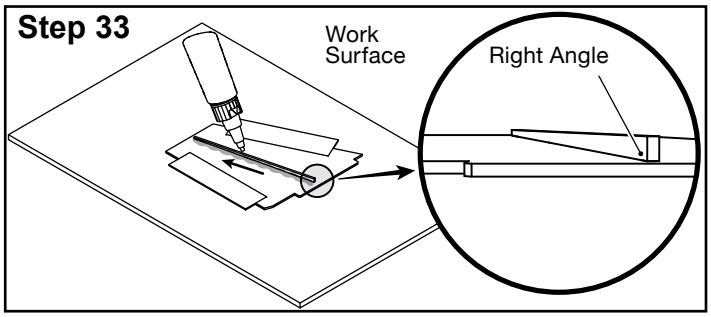

☐ 34. Remove eight of the **BF4** and four of the **BF5** parts from the Nike-Hercules Booster Fin Basswood Sheet (P/N 15505) with a sharp hobby knife; no sanding is required at this point.

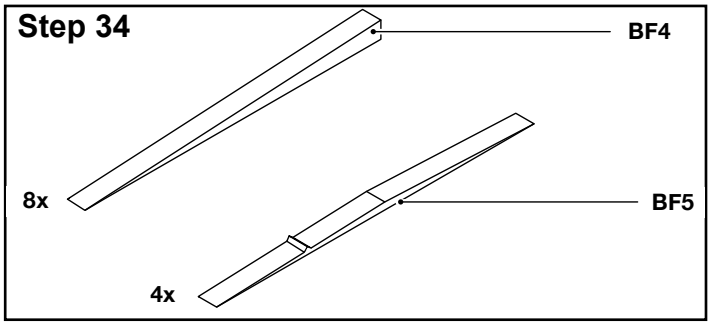

☐ 35. On each of the fin cores, use medium CyA adhesive to glue the **BF5** parts along the fin tips, so that they are flush with the tip edge.

Note: the slopes on the BF5 parts are not exactly symmetrical. For clarity, the shorter side has an extended tab which is positioned on the forward side of the fin.

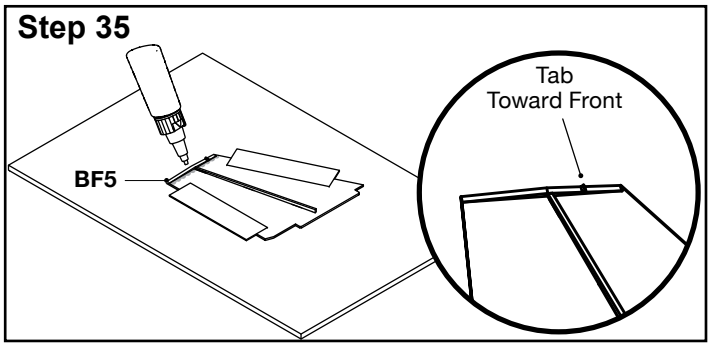

☐ 36. As with the tips, use medium CyA adhesive to glue the root formers (**BF4**) to either side of the peak former at the root of the fin cores. Align the **BF4** formers along the line marked in step 31.

Note: The BF4 former on the aft end of the fin will hang over the slight slope on the fin core. This is expected and will be corrected when the fin structure is sanded in step 51.

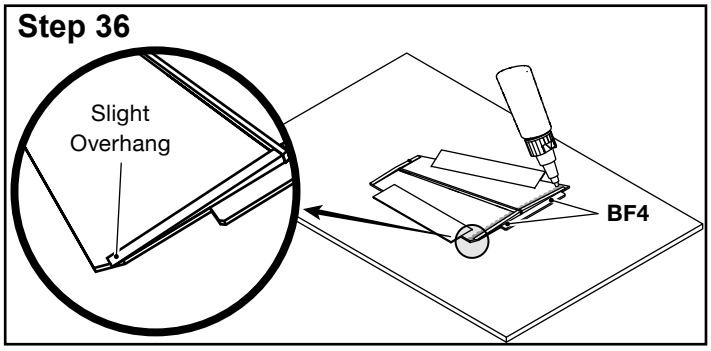

☐ 37. Remove four of the **BF6** peak doublers from the 1/16" Plywood Sheet B (P/N 40094) and glue them into place on the forward side of the **BF2** peak formers with medium CyA adhesive. Ensure that the doublers are pressed into the **BF4** former as well as down against the **BF1** fin core.

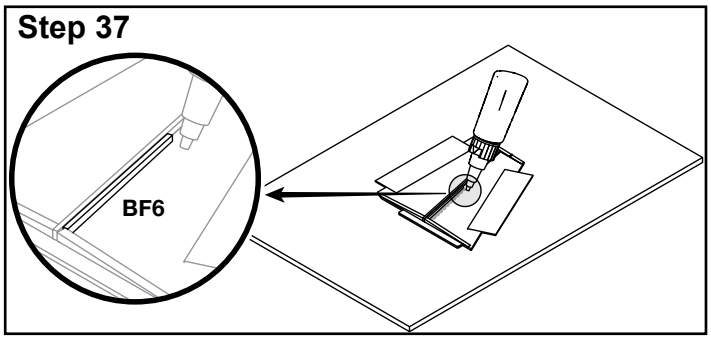

☐ 38. Add medium CyA adhesive fillets to the joints between the root and tip formers (**BF4** and **BF5**), and the peak formers (**BF2**). Allow the glue to set entirely before continuing. Remove the tape securing the fins to the work surface, and flip the fins over to assemble the other side.

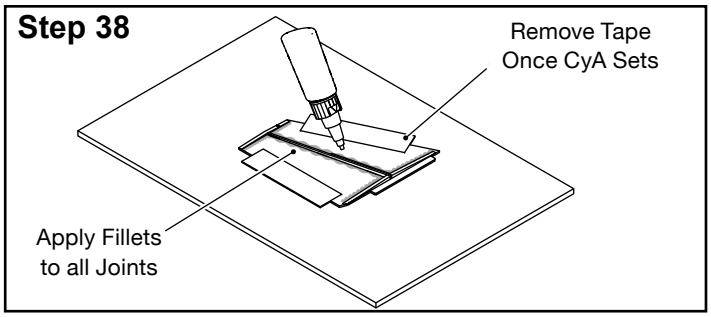

☐ 39. Remove the **BF3** fin peak formers from the 1/16” Ply Sheet C (P/N 40095), and remove tab remnants with medium sandpaper (220 grit).

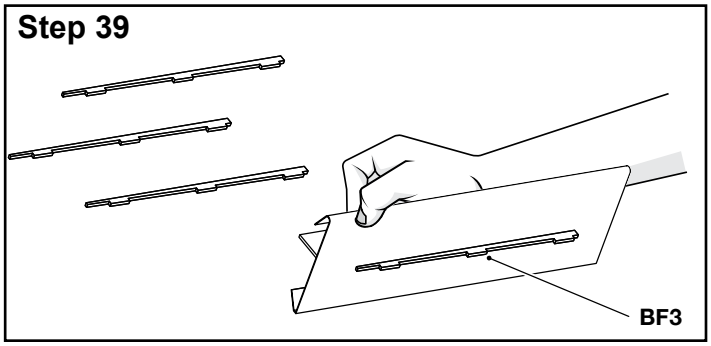

☐ 40. Glue the four **BF3** formers into the **BF1** cores using medium CyA adhesive, taking care to not twist the fin assembly while doing so.

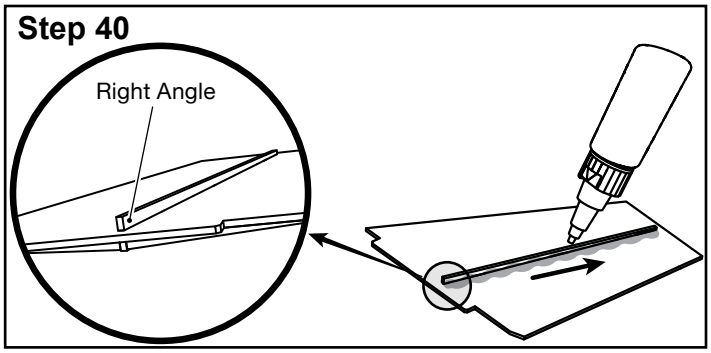

☐ 41. Remove the remaining eight **BF4** and four **BF5** parts from the Nike-Hercules Booster Fin Basswood Sheet (P/N 15505) with a sharp hobby knife.

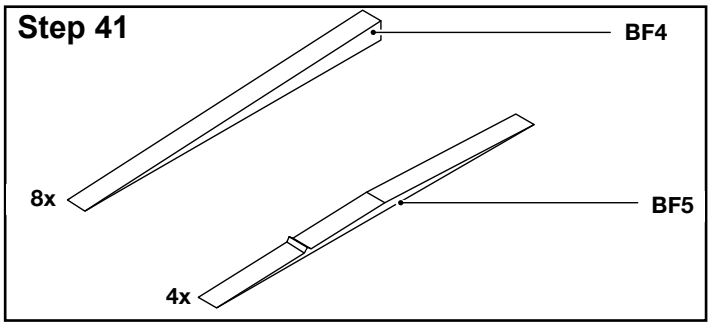

☐ 42. Glue the four **BF5** formers along the fin tips using medium CyA adhesive.

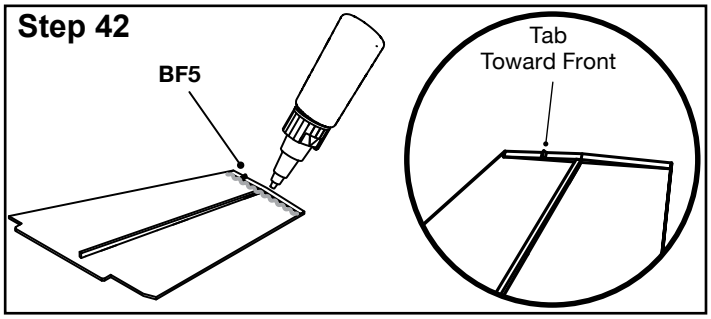

☐ 43. Glue the eight **BF4** formers along the fin roots using medium CyA adhesive. Align the formers along the line drawn in step 31.

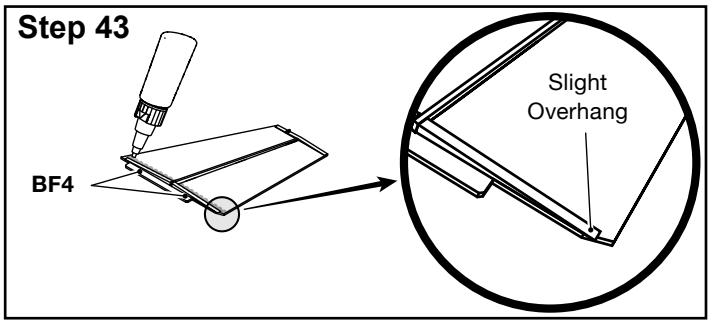

☐ 44. Remove the remaining four **BF6** peak doublers from the 1/16” Plywood Sheet B (P/N 40094), and glue them into place on the forward side of the **BF3** peak formers using medium CyA adhesive. Ensure that the doublers are pressed into the **BF4** former as well as down against the **BF1** fin core.

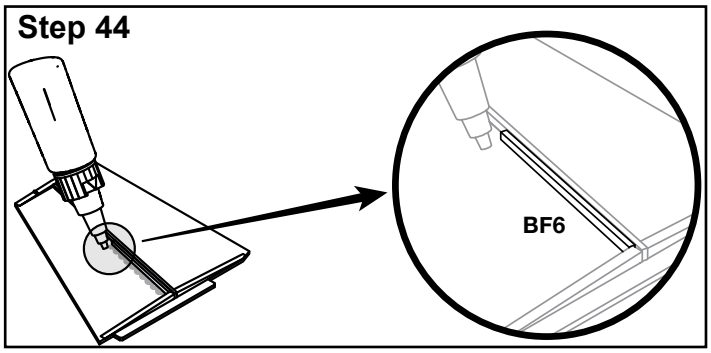

☐ 45. Apply glue fillets between the peak formers and doublers (**BF2/BF3/BF6**), and the root and tip formers (**BF4** and **BF5**). Allow the adhesive to set entirely before continuing.

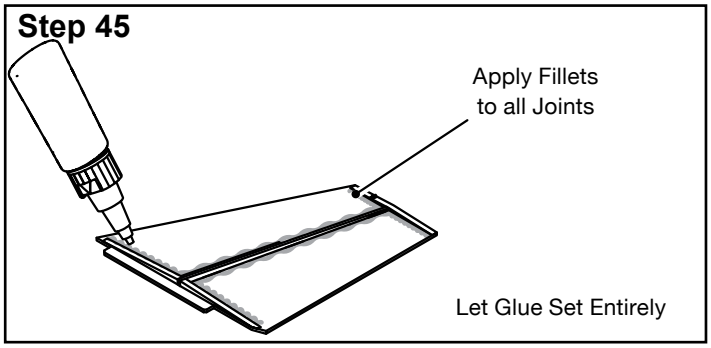

☐ 46. Using coarse sandpaper (80 grit) on a sanding block, sand the former and core of the built-up fins so that the forward and aft edges of the core are reduced by approximately 50%. This will result in a final edge thickness of 1/32” (0.8 mm) and chamfers approximately 3/16” (5 mm) wide chamfer along the front and back edges of the fin core.

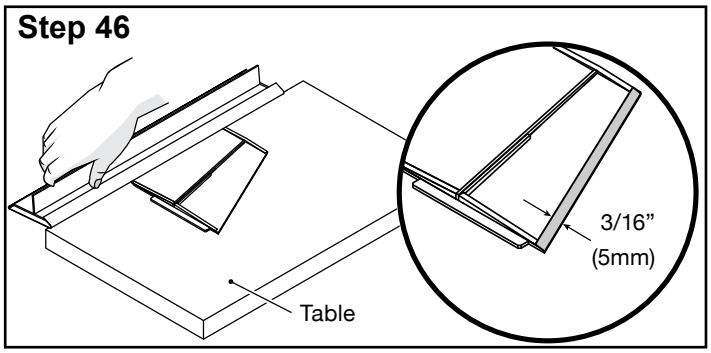

☐ 47. Use a small rounded object (such as a rounded dowel, bone folder, or knitting needle) and a straightedge to mark along the light (peak) line of the booster fin facings in the Nike-Hercules Cardstock Sheet B (P/N 40091). Only a light indentation of the line is required to make a sharp fold much easier.

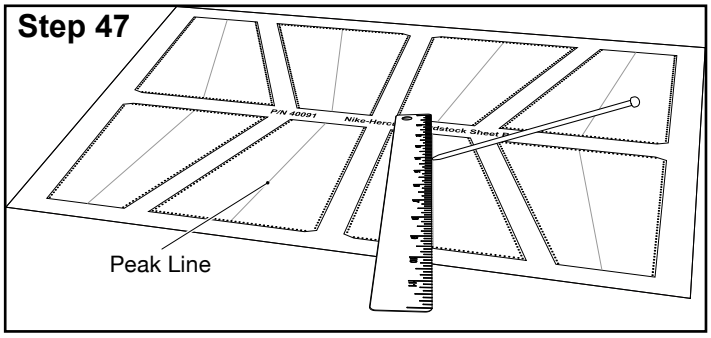

☐ 48. Cut the booster fin facings out of Cardstock Sheet B (P/N 40091) using a sharp hobby knife and a straightedge. Pre-crease the fin facings along the light peak line using a table edge or other straightedge. The rivet markings should face out.

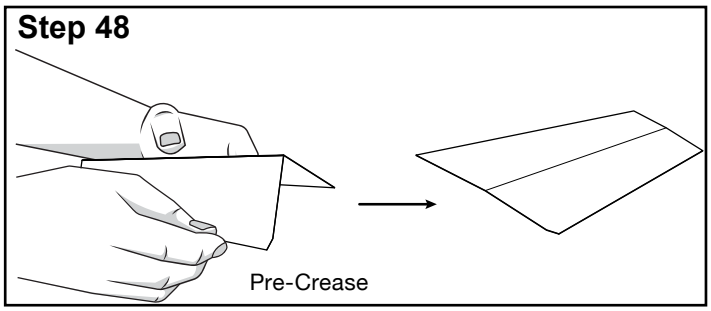

☐ 49. Group the fin facings into left/right pairs, with the peak lines and rivet markings facing out. Then, glue the facings onto the built-up fin assemblies by applying a thin layer of wood glue to the root and tip formers, around the edges of the core, and along the peak formers. Press the facings into place. Ensure that the facings are well adhered to the cores and that there are no wrinkles along the edges before allowing the fins to dry entirely.

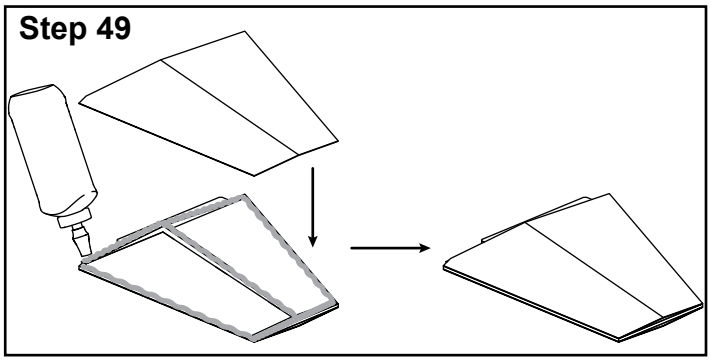

☐ 50. Wick some thin CyA adhesive into the exposed edges of the fins and allow the adhesive to set completely.

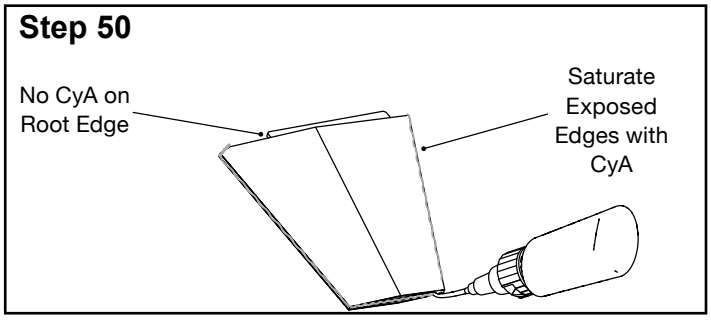

☐ 51. Sand the edges of the fins smooth using fine sandpaper (400 grit). On the first pass, clean up any overhanging of the cardstock facings. Then, slightly round the forward and aft edges while sanding the fin tip square.

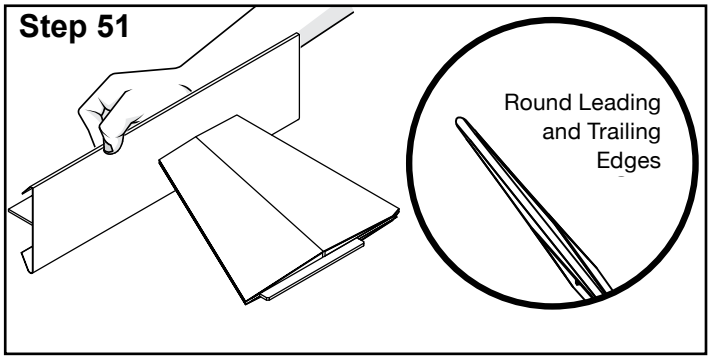

☐ 52. To protect the fins – and harden their surface for final finishing – apply two light coats of lacquer clear coat. Allow the finish to dry between coats.

Note: Water-based coats should be avoided as they can cause the facings to warp, ruining the fins.

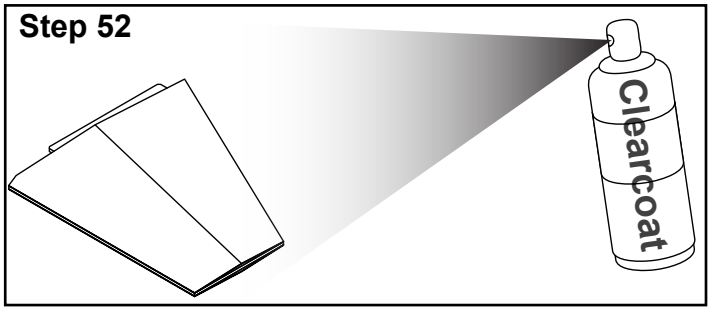

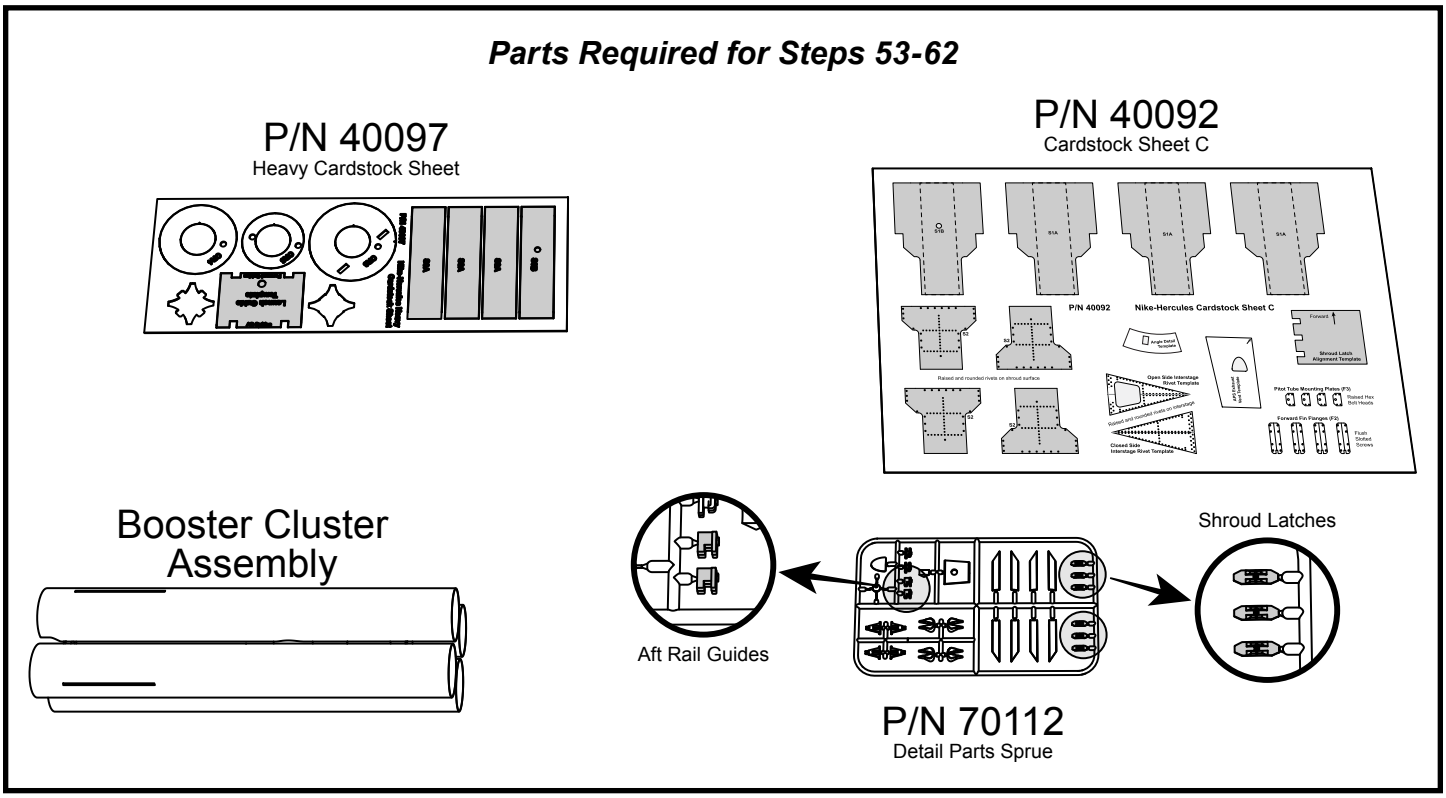

Nike Booster Shroud Assembly

☐ 53. Carefully cut the lightweight cardstock shroud parts (3x**S1A**, 1x**S1B**, and 4x**S2**) from the Nike-Hercules Cardstock Sheet C (P/N 40092).

Optional: If the Nike-Hercules is being built as a static model, do not remove the rail button hole from the S1B part.

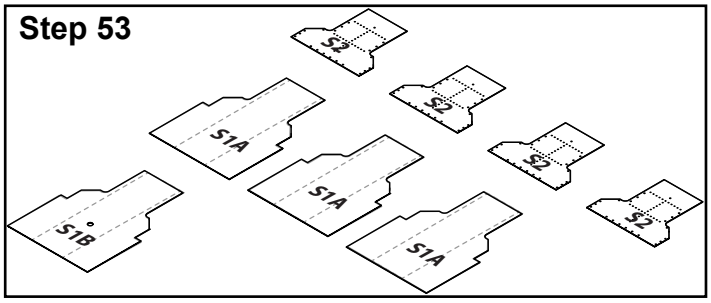

☐ 54. Remove the heavy cardstock shroud stiffeners (3x**S3A** and 1x**S3B**) from the Nike-Hercules Heavy Cardstock Sheet (P/N 40097) with a sharp hobby knife.

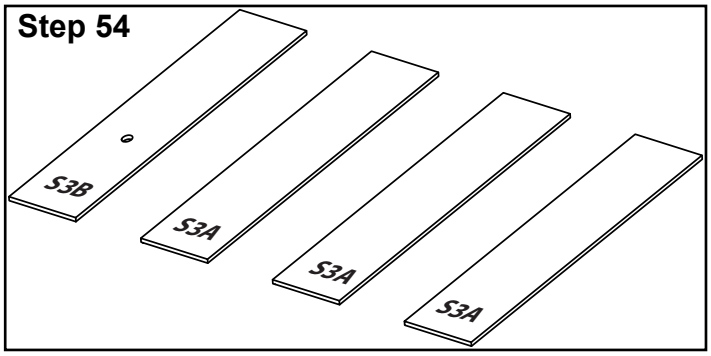

☐ 55. Glue the base shroud pieces using a thin layer of wood glue on the smaller shroud doublers (**S2**). Assemble the doublers and main shroud pieces (**S1A** and **S1B**). The printed sides of the shroud pieces should face away from each other so that the rivet reference on the doubler and alignment lines on the main piece are both visible.

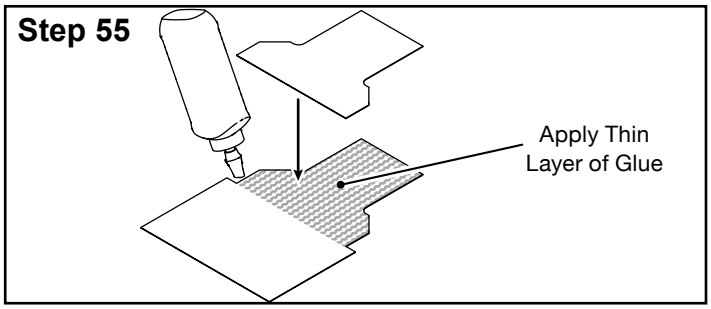

☐ 56. Attach the shroud stiffeners between the dotted lines on the main shroud pieces using the single **S3B** for the **S1B** (for rail button mounting), and the three **S3A** stiffeners for the remaining **S1A** sides. Allow the shroud pieces to dry entirely.

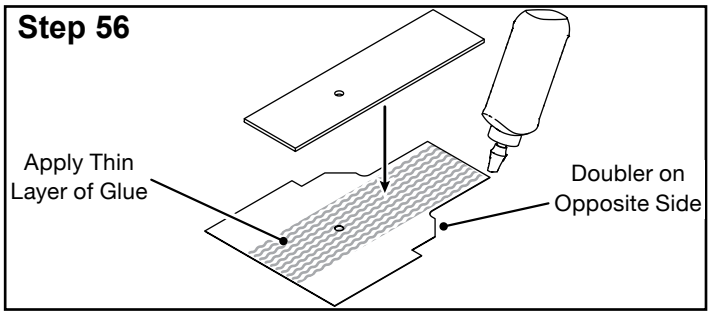

☐ 57. Once dry, flatten the shroud sides by gently bending them back into shape if they have bowed. Additionally, use fine sandpaper (400 grit) to sand the edges of the shroud sides to remove any cut marks, damage, or misalignment.

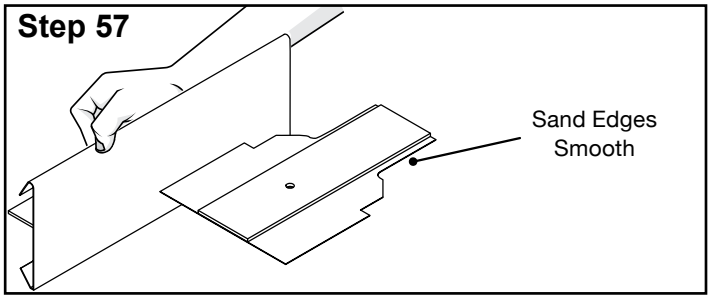

☐ 58. Using medium CyA, glue the weld nut into the **S1B/S3B** shroud piece from the back side (against the heavy cardstock stiffener). Apply the adhesive to both the threaded shaft as well as the flat base of the weld nut, then press it into place firmly, ensuring that as much of the weld nut is visible on the outer surface of the shroud as possible. Optional: Leave the weld nut off of static models.

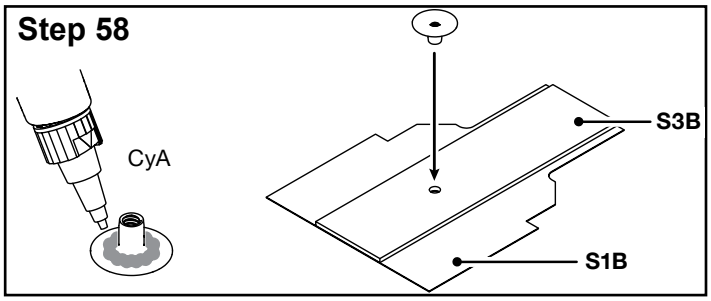

☐ 59. Pre-round the edges of the shroud sides – aft of the shroud doublers – to fit along the surface of the booster tubes by gently bending the outer 5/8” (16 mm) of the shrouds to approximate the curvature of the booster tubes. The more accurate the fit, the more easily the shrouds can be installed in the next step.

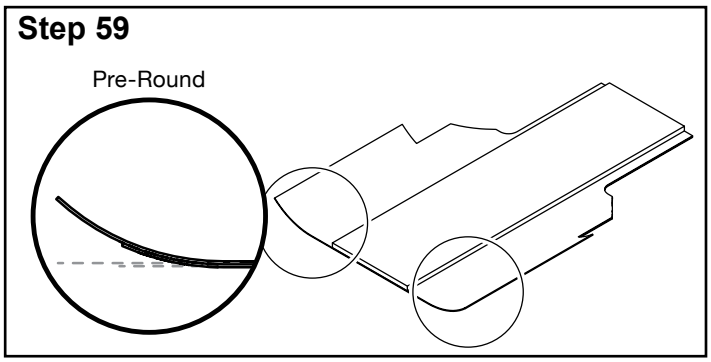

☐ 60. Glue the shroud sides into place flush with the aft edge of the booster tubes. If the tubes have not yet been painted, use wood glue for the best adhesion, otherwise, use medium CyA on the rounded portions of the shroud and the edges of the heavy cardstock stiffeners. Ensure that the shroud sides – especially the one containing the weld nut – are well adhered to the booster tubes to prevent failure during flight.

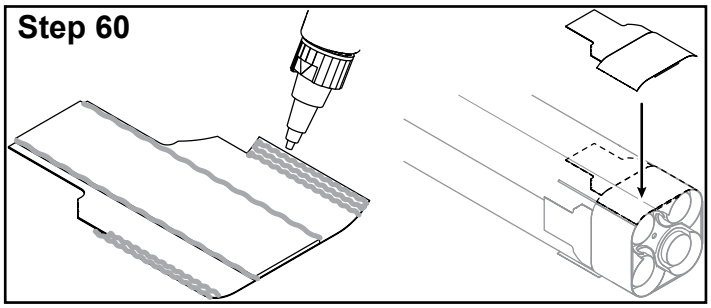

☐ 61. Cut the scale rail guide template out of the Heavy Cardstock Sheet (P/N 40097) and tape it into place flush with the aft edge of the shroud doubler on the side of the functional rail buttons (or any side, for a static model). Install the scale rear rail guides (the more square set) from the Nike-Hercules Detail Parts sprue (P/N 70112) using medium CyA adhesive. When properly installed, the rail guides will form a “C” shape facing in when viewed from the aft end of the rocket. Keep the rail guide template to install the forward scale guides on the interstage later (See Step 68).

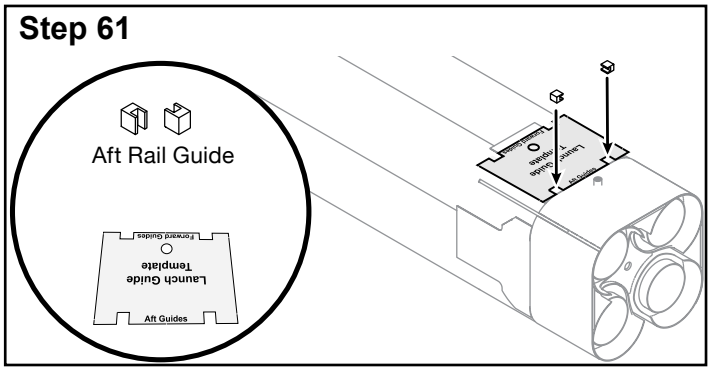

☐ 62. Cut the shroud latch alignment template out of the Cardstock Sheet C (P/N 40092) with a sharp hobby knife and install the shroud latches on the two shroud sides 90 degrees away from the side with the rail button mount. Tape the template into place against the aft edge of the shroud doubler, then use medium CyA adhesive to install the six shroud latches from the Detail Parts sprue – three on each side. Be aware that one end of each shroud latch is slightly curved to match the surface of the shroud over the booster tube.

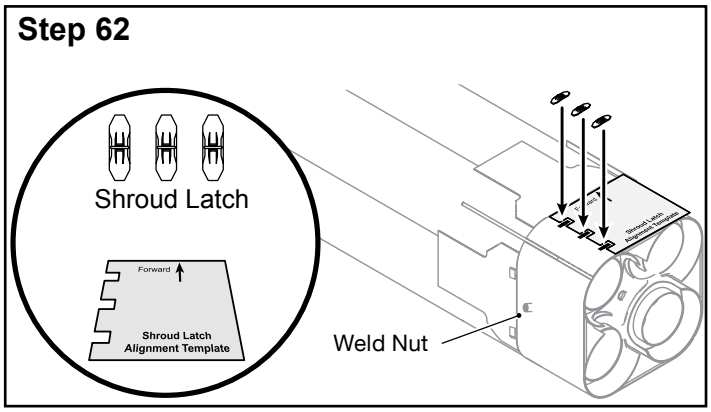

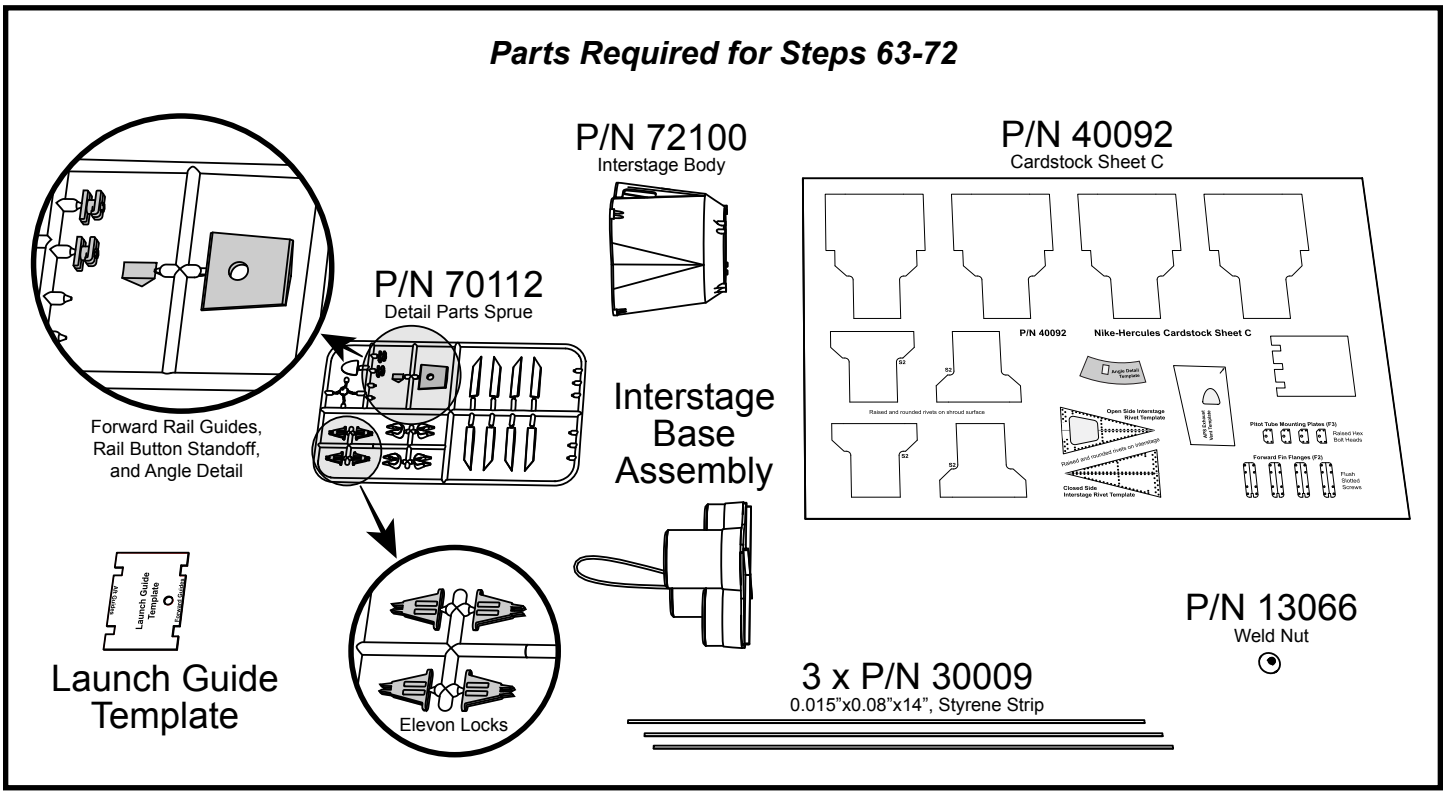

Nike-Hercules Interstage Assembly

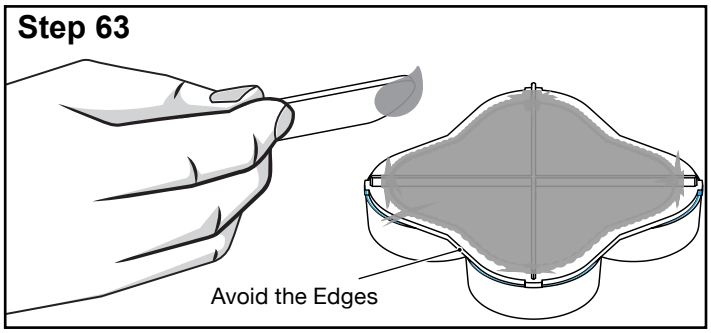

☐ 63. Apply a thin layer of 15-minute epoxy to the upper surface (with the X-shaped frame) of the interstage base to protect the plastic from the exhaust of the upper stage (Hercules) motor. Set the interstage base to one side while the adhesive sets.

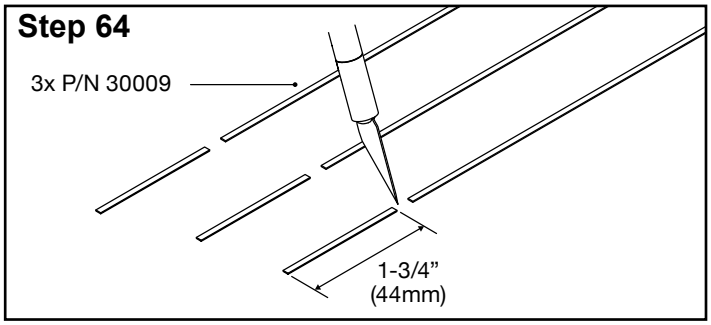

☐ 64. Using a sharp hobby knife, cut a 1-3/4" (44 mm) section of styrene from each of the three included styrene strips (P/N 30009, .015"x.080", 0.4 mm x 2 mm). These will act as spacers between the sustainer boattail and the interstage to reduce friction and improve separation.

- Spacer Cut Guide

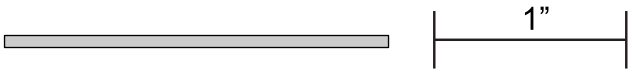

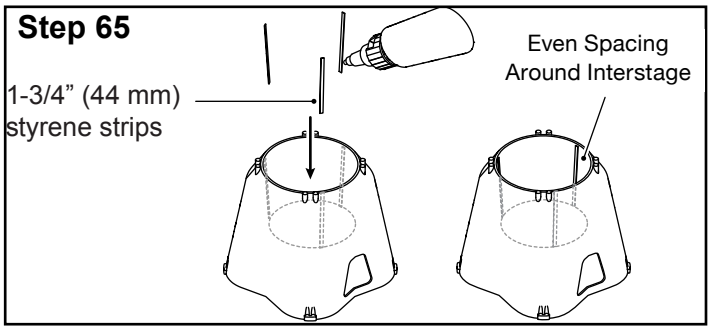

☐ 65. Apply a small bead of medium CyA adhesive to each styrene strip and glue the strips onto the inner mating surface of the interstage body vertically, so that the strips end up roughly evenly spaced from one another around the aperture of the interstage.

☐ 66. Use medium CyA adhesive to attach the rail button standoff (from P/N 70112 Detail Parts Sprue) on one of the solid sides, 1/8” (3 mm) from the aft end of the interstage body. Once the adhesive sets, drill a 3/16” (5 mm) hole using the hole in the standoff as a guide.

Optional: Leave the rail button standoff and hole off for a static model.

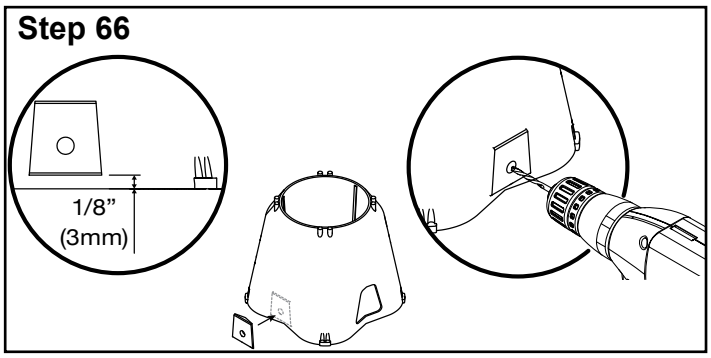

☐ 67. Use medium CyA adhesive to glue a weld nut into the interstage body. Place it tight against the inner peak of the interstage body and ensure that the adhesive does not drip onto the lower edge of the interstage body.

Optional: Leave the weld nut off a static model.

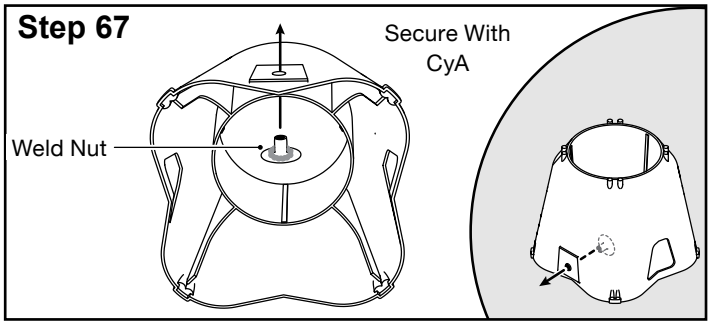

☐ 68. Use the scale rail guide template to install the forward rail guides from the Nike-Hercules Detail Parts sprue (P/N 70112). These are the thinner, more rectangular rail guide details. They go at the aft edge of the interstage body (on the same side as the rail button standoff or on one of the solid edges for a static model). Center the template on the face of the interstage, so it’s flush with the aft edge and temporarily tape the template into place. Use medium CyA adhesive to glue the rail guides into place, using the openings in the template to align the guides. The longer section by the top of the rail guide faces toward the second guide. Allow the adhesive to cure before continuing.

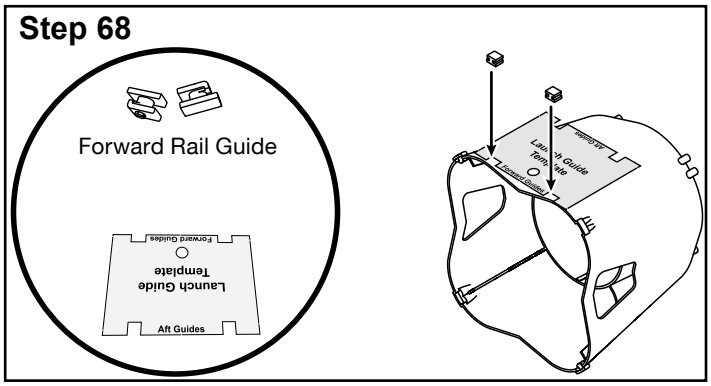

☐ 69. Cut the angle detail template out of the Cardstock Sheet C (P/N 40092) and tape it into place centered on the opposite side from the rail guide details. Remove the angle detail part from the Detail Parts sprue (P/N 70112), and use medium CyA to glue it in place centered within the template cutout. The flat surface faces up on the interstage. Allow the adhesive to set before continuing.

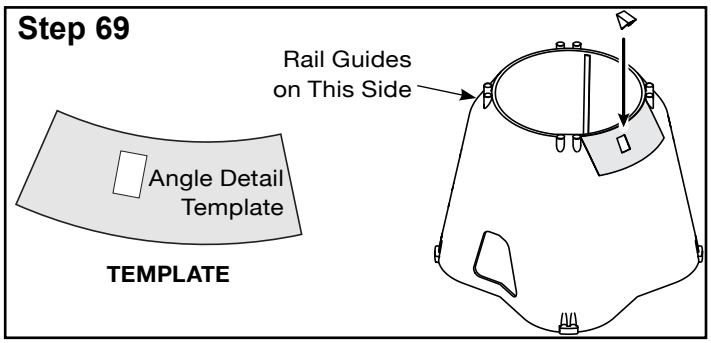

☐ 70. Remove the four triangular elevon locks from the Detail Part sprue and glue them into place on the cylindrical lugs at the forward end of the interstage body. Using fine sandpaper (400 grit), sand the bottom (flat surface) of the elevon locks and the upper circular surfaces of the lugs. Finally, adhere them into place with a couple drops of medium CyA adhesive.

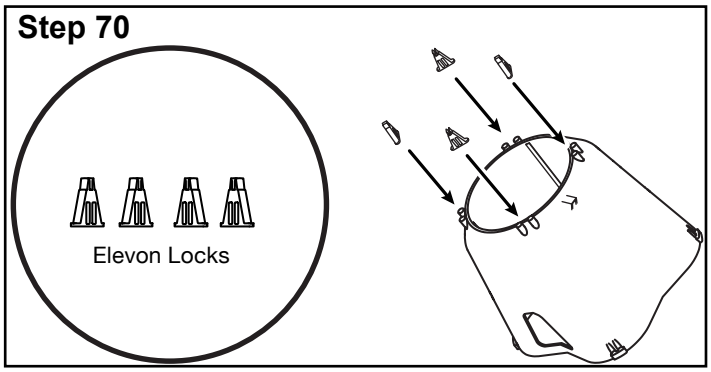

☐ 71. Optional: If painting your Nike-Hercules in our example paint scheme, it is easiest to paint the interstage base separate from the interstage body. To do so, mask off the edge of the interstage base (where it will be glued into the interstage body), as well as the surface of the couplers, and spray the exposed portions of the base and interstage body with a uniform coat of primer. Once the surface is prepped, spray the interstage base to match the Nike booster tubes and the interstage body as desired. Allow the final paint to dry until it will no longer be marred by handling (follow the manufacturer's recommendations).

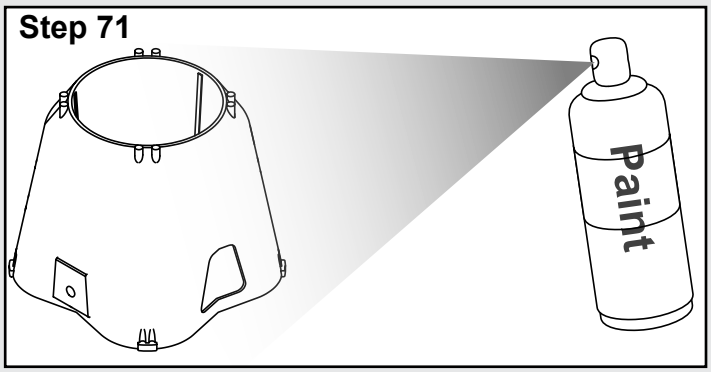

☐ 72. Insert the interstage base into the booster tubes so that the long coupler with the loop is in the same tube as the shock cord. Apply a bead of medium CyA adhesive to the internal lip of the interstage body and install it on the interstage base so that the rail guides (functional and/or scale) are aligned vertically on the same side.

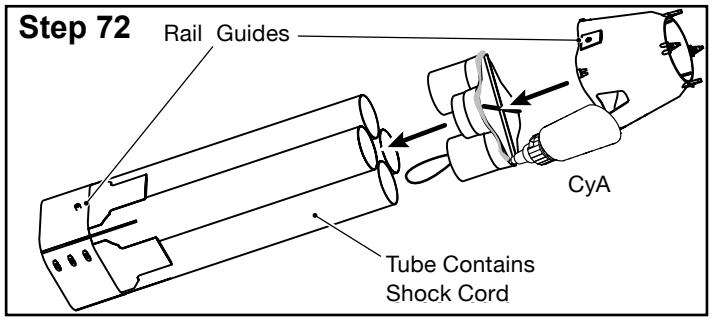

Parts Required for Steps 73-85

Interstage Assembly

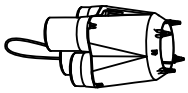

P/N 40093
1/16" Plywood Sheet A

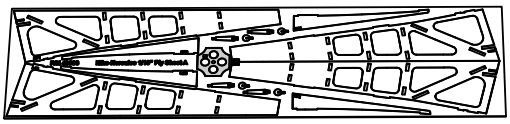

P/N 40090
Cardstock Sheet A

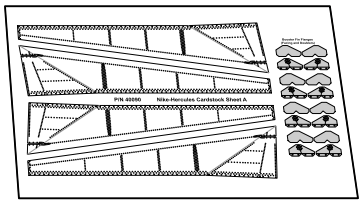

P/N 40096
1/8" Plywood Sheet

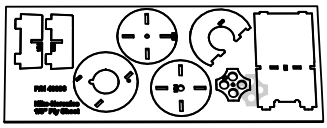

P/N 35547
Fin Alignment Guides

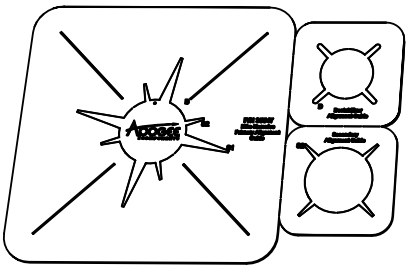

Booster Cluster With Shroud

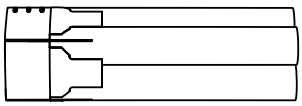

4 x Assembled Booster Fins

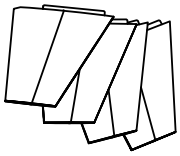

Nike Booster Final Assembly

☐ 73. Use a sharp hobby knife to remove the booster retainer cap **R1** from the 1/16" Plywood Sheet A (P/N 40093) and the booster retainer stiffener **R2** from the 1/8" Plywood Sheet (P/N 40096). Use medium CyA adhesive to glue **R1** and **R2** together, aligning the holes in the center. Set the retainer aside for the adhesive to cure.

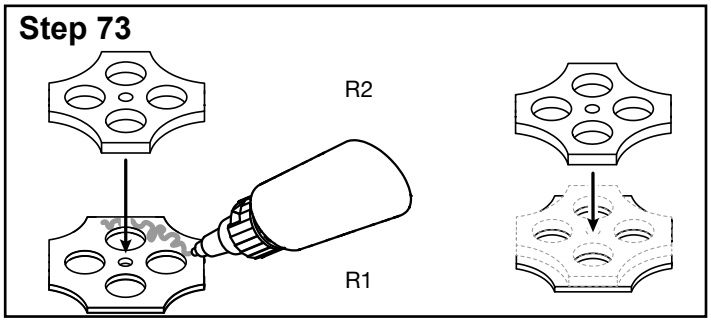

☐ 74. Separate the corrugated cardboard alignment guides (P/N 35547). Cut the two small alignment guides off of the side of the large (primary) alignment guide and set the large guide flat on a table.

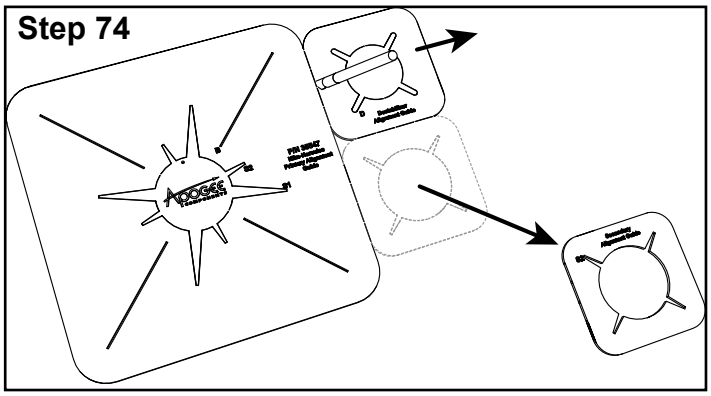

☐ 75. Dry fit the booster fins onto the booster tubes. Ensure they fit nicely into the slots and sit flat against the tube. Sand the tabs and/or root formers as necessary to ensure that the fins fit correctly (using medium sandpaper, 220 grit, or a flat needle file). They should sit flat against the booster tube, with the tab touching the motor mount tube. With a pencil, trace around the root of the fins to mark the booster tube, then remove the fin and apply masking tape along the marked lines to protect the surface of the boosters and shroud from glue. Repeat with all four booster fins.

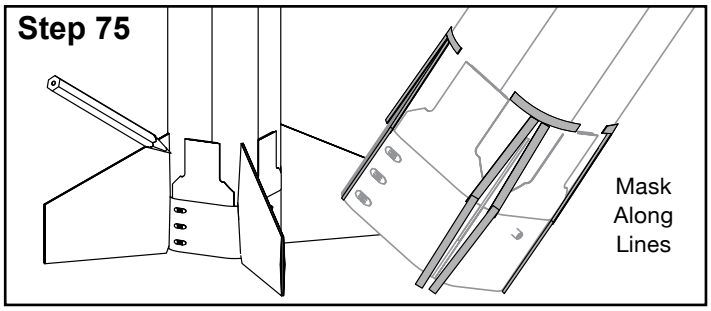

☐ 76. Apply 15-minute epoxy at the base of the fin slots, on the surface of the fin tab, and along the bottom of the fin. Slide all four fins into place and set the booster onto the fin alignment guide, with the aft edges of the fins slotted into the long fin alignment slots marked **B**.

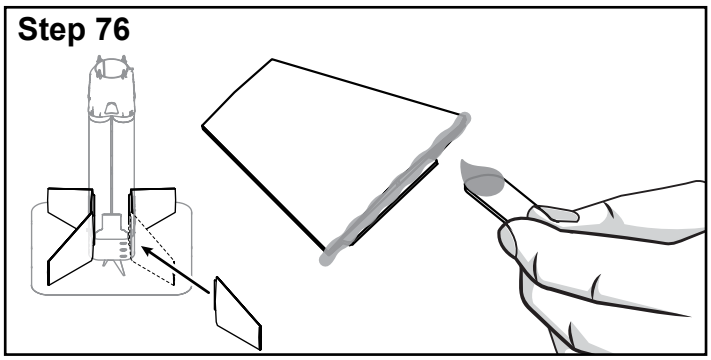

☐ 77. Use cotton swabs to clean up any excess epoxy that squirts out of the fin joint and allow the adhesive to set until it is **no longer sticky, but remains soft**.

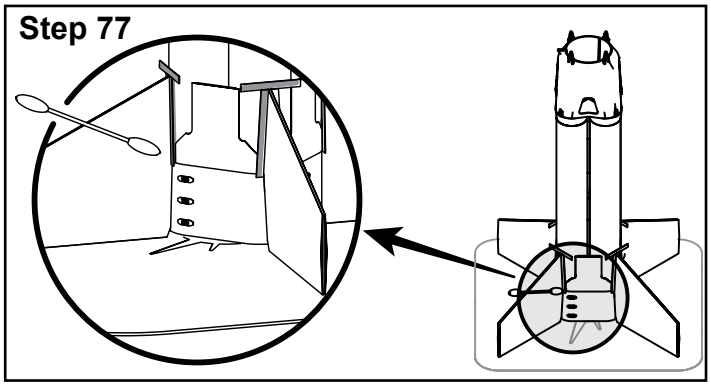

☐ 78. When the epoxy is no longer tacky but before it hardens entirely, carefully remove the masking tape around the fins, and ensure the joints are clean. Allow the epoxy to set entirely.

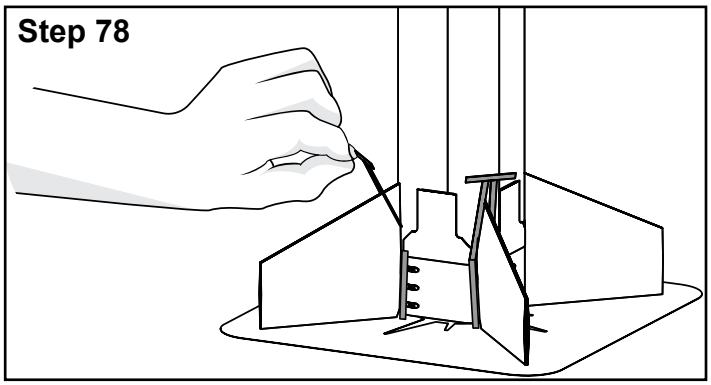

☐ 79. Using a sharp hobby knife, cut out the booster fin flange components from one of the two Nike-Hercules Cardstock Sheet A (P/N 40090) – the set of flange components on the second sheet are not used in the build.

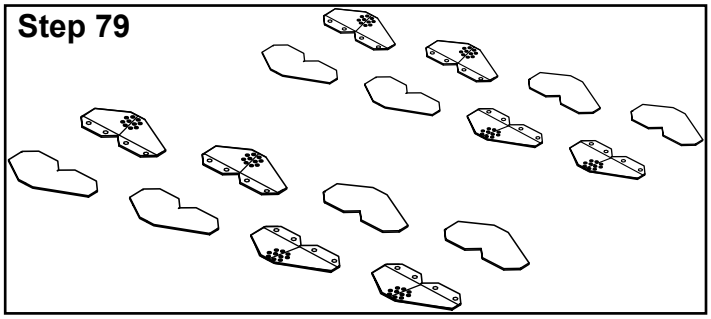

☐ 80. Use wood glue to assemble the booster fin flanges by gluing the blank flange doublers on the non-printed side of the decorated fin flanges. Allow the wood glue to dry entirely.

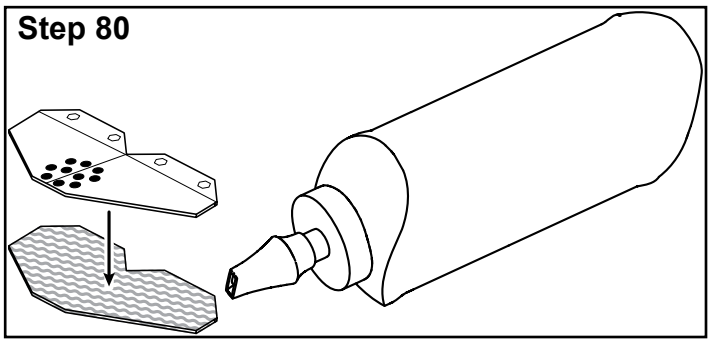

☐ 81. Use a thin rounded dowel, knitting needle, or bone folder, along with a straightedge to mark the fold lines on the flanges along the bottom tab and midline. Only a slight indentation is required to ensure a sharp bend.

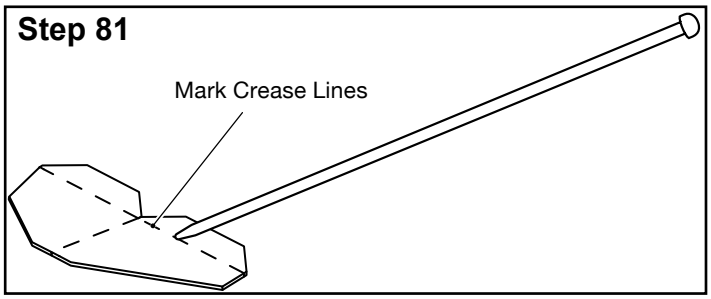

☐ 82. Sand the edges of each flange with fine sandpaper (400 grit) to remove any misalignment or damage to the stacked cardstock.

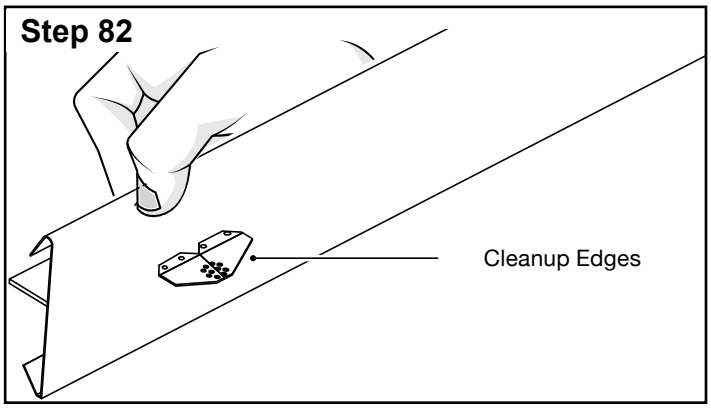

☐ 83. Fold the flanges so that the tabs form a right angle with the main body of the flange, and fold a slight kink into the centerline of the flange to match the angle of the fin peak.

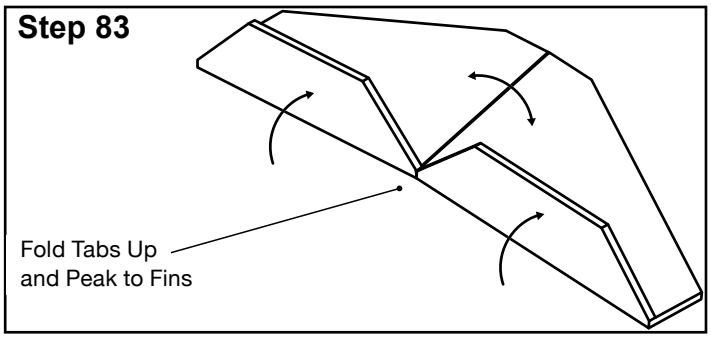

☐ 84. Apply medium CyA adhesive to the back side of each of the flanges and tabs. Install them at the base of each booster fin – centered on the midline of the fin. Ensure that the flange is well adhered to both the fin and the booster tube.

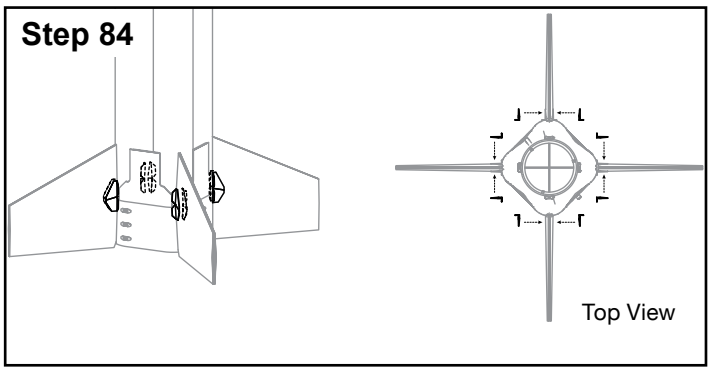

☐ 85. The basic assembly of the Nike booster is now complete and the booster is ready for the installation of the recovery system (step 184) and its final finishing (Step 196)!

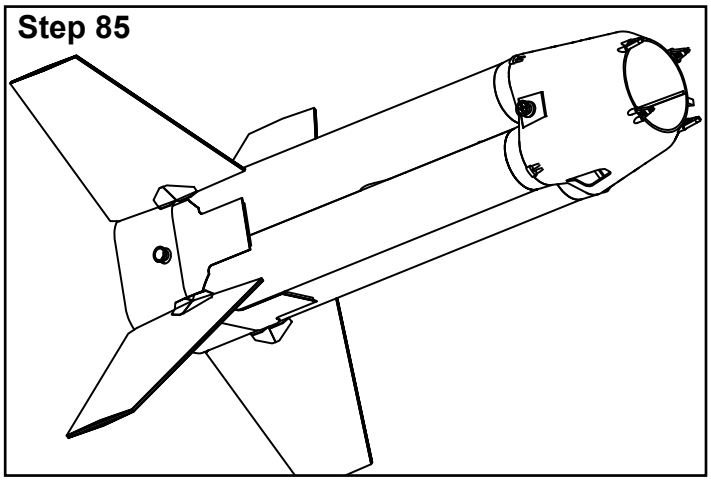

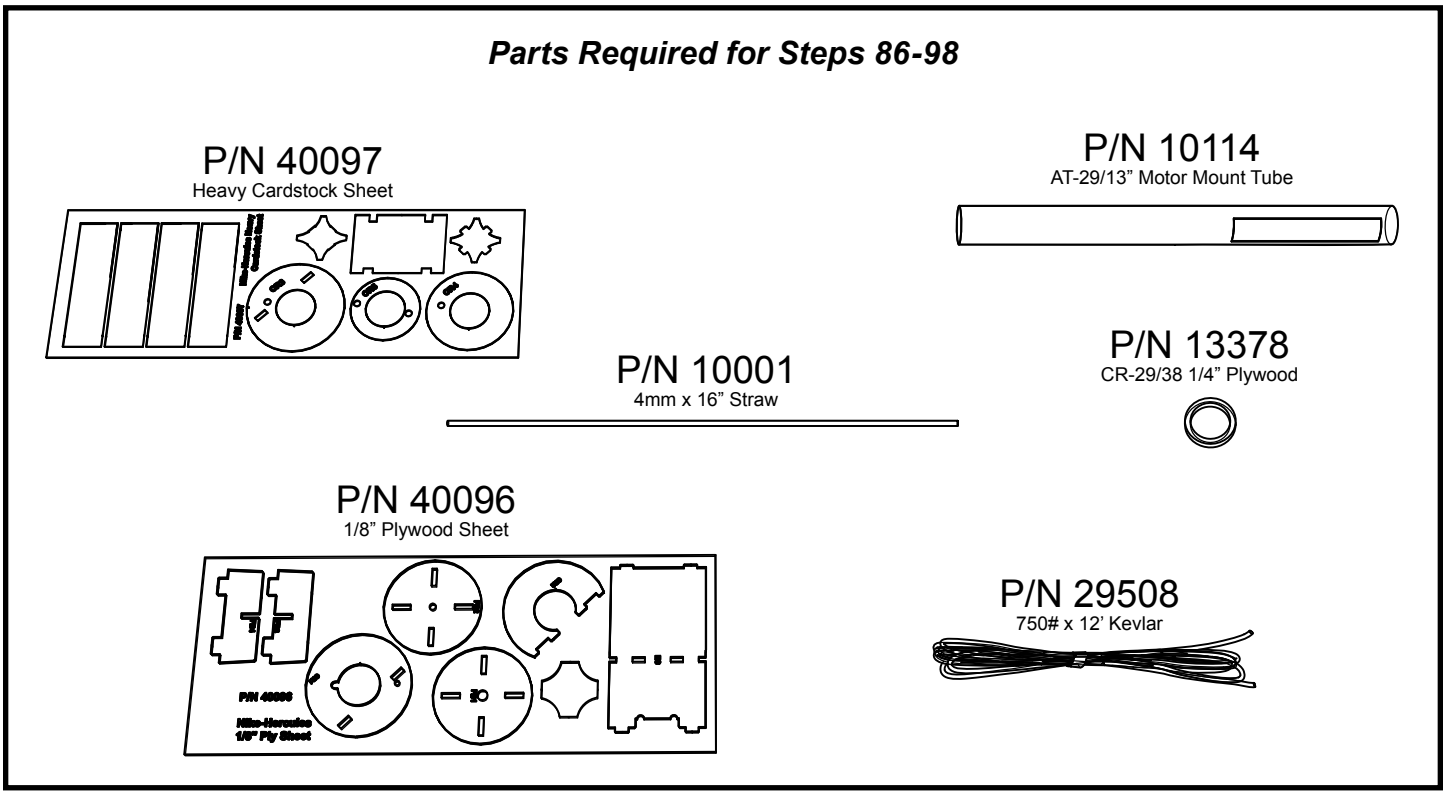

Hercules Missile—Motor Mount/Ebay

The integrated motor mount/ebay is one of the parts of the kit that requires the most accuracy in construction, and care should be taken to carefully align the rings with the marks on the motor mount tube. This is most easily done by sliding the rings into place about 1/8” (3 mm) away from the alignment mark, applying glue, and then sliding the ring through the glue and into position. Take care to use sufficient glue so that the rings do not bind as they are moved, or simply place rings into position and secure in place with substantial fillets on either side of the joint.

The rotational position of the centering rings is also critical to the proper assembly of the motor mount tube/ebay – the motor mount tube is marked with an engraved longitudinal line. The centering rings are then marked, on their inner circumference, with a small notch that should be aligned with the alignment line. Careful attention to the alignment markings on the motor mount tube (both the longitudinal alignment line as well as the radial position markings) will ensure that the motor mount will fit correctly in the final assembly.

☐ 86. Remove the aft centering ring (**CR5**) from the Heavy Cardstock Sheet (P/N 40097) with a sharp hobby knife, and lightly sand the inner hole with medium sandpaper (220 grit) to remove any remnants of tabs.

Step 86

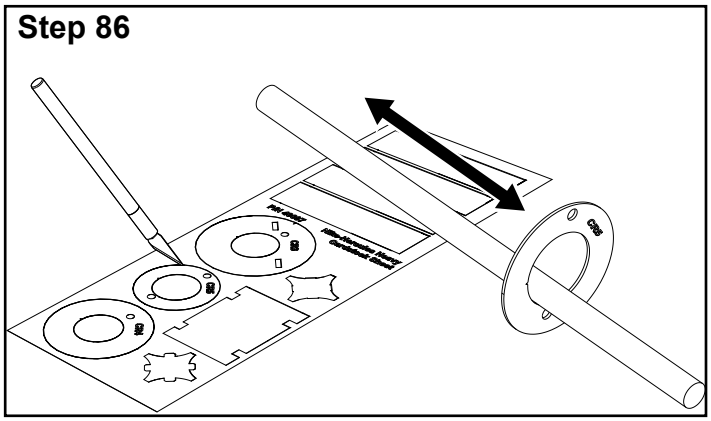

☐ 87. Use an abrasive sander on a rotary tool to grind away one side of the remaining weld nut so that it fits in centering ring **CR5** without fouling the inner motor mount tube hole. Once it fits properly, glue the weld nut into **CR5** using medium CyA adhesive so that the base of the weld nut is on the opposite side of the engraving and the small notch in the inner hole is on the left-hand side. Allow the adhesive to cure.

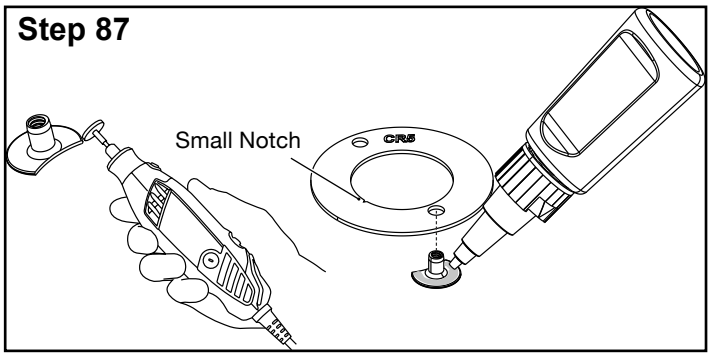

☐ 88. Remove centering rings **CR4** and **CR3** from the Heavy Cardstock Sheet (P/N 40097). Remove centering rings **CR1** and **CR2** as well as the ebay (ES) sled from the 1/8” Plywood Sheet (P/N 40096). Lightly sand the rings using medium sandpaper (220 grit) to remove the tabs.

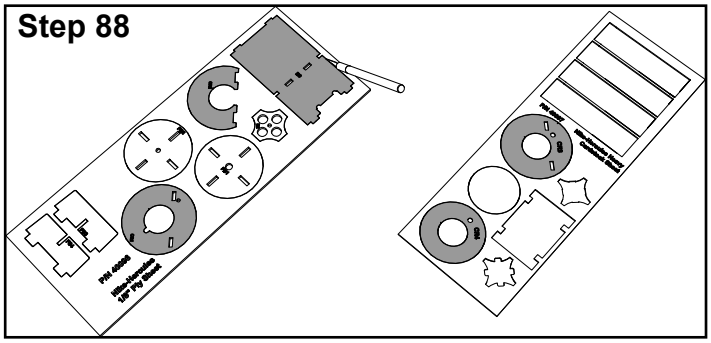

☐ 89. Use a sharp hobby knife to cut the waste rectangle out of the Hercules motor mount tube (P/N 10157). Ensure that the tabs are removed as well so that the ebay sled will fit tightly against the cut surfaces.

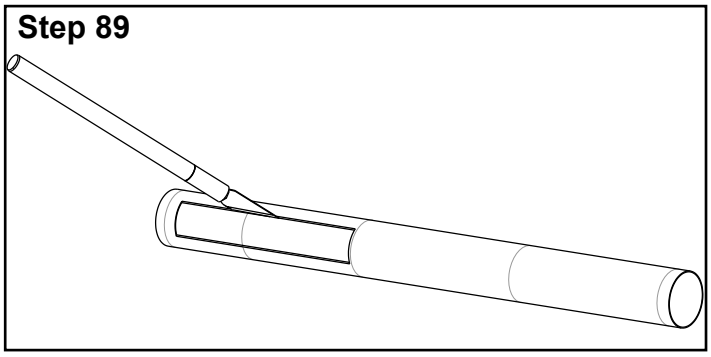

☐ 90. Glue centering ring CR3 onto the motor mount tube next to the ebay sled slot so that the engraving is facing toward the aft end of the motor mount (away from the slot), and the notch in the inner hole is aligned with the lengthwise engraved line on the motor mount tube. Secure the ring with wood glue and ensure that a solid fillet is formed on the aft side of the ring.

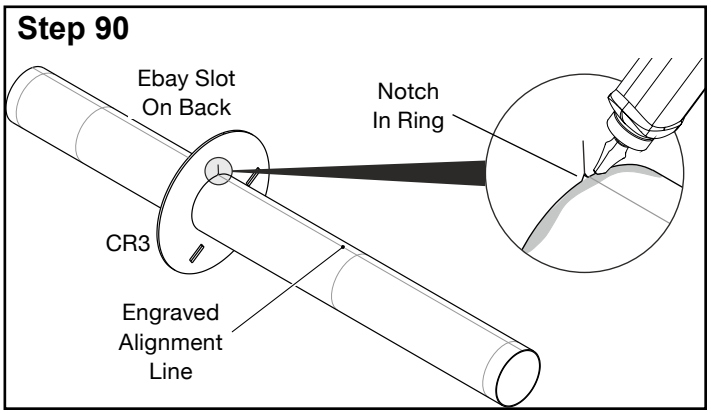

☐ 91. After aligning its notch to the lengthwise engraved line, glue centering ring **CR4** onto the motor mount with wood glue. Ensure that the ring is placed so that the aft side of the ring is flush with the engraved position line in the middle of the motor mount tube (at the aft end of the ebay), and the ring's engraved label is facing aft. When correctly aligned, the small holes in **CR3** and **CR4** (for the initiator wire guide) should line up.

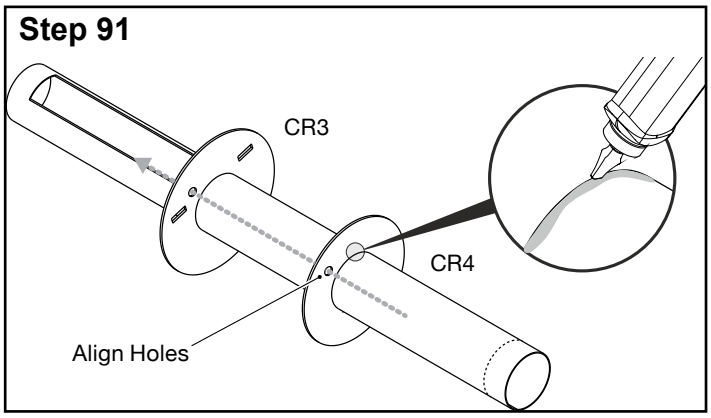

☐ 92. Install the aft centering ring (**CR5**), aligning it in the same way as **CR3** and **CR4**. The engraving on the ring should face aft, and the notch in the inner surface of the ring should be aligned with the lengthwise engraved line on the motor mount tube. The three holes for the initiator wire guide should line up as well. Glue the ring into place just in front of the marked line using wood glue.

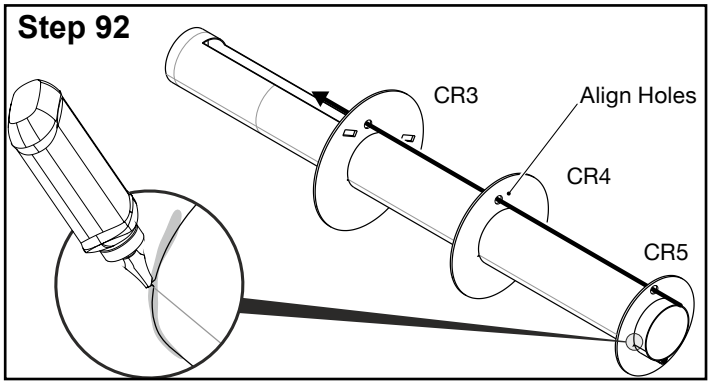

☐ 93. Carefully slide the 4mm straw (P/N 10001) through the holes in the rings, and glue it in place using thin CyA adhesive at both ends (on **CR3** and **CR5**). Use a sharp hobby knife to trim the straw down to length.

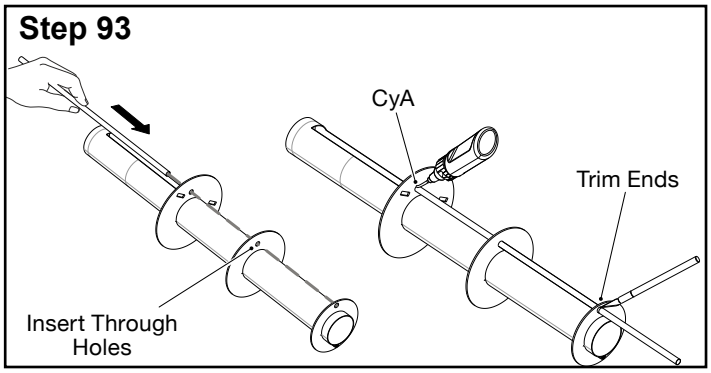

☐ 94. Slide the partial ring **CR2** onto the motor mount tube so that it sits right in front of the engraved alignment mark, and is rotated so that the flat portion of the ring is aligned with the cutout on the motor mount tube. Apply wood glue to the tabs and upper surface of **CR2**. Install the sled (**ES**) by sliding the tabs on the aft end of the sled through the aft ebay centering ring (**CR3**), and lowering the sled (**ES**) so that it sits against the cutout in the motor mount tube.

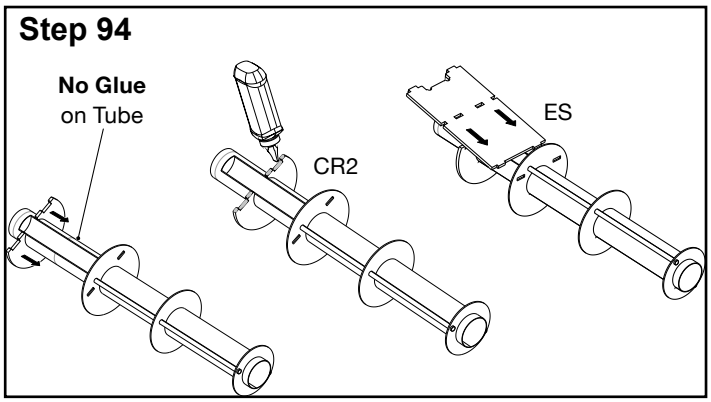

☐ 95. Cut a 24” (610 mm) section off of the 750# Kevlar shock cord and set aside for later assembly of the forward section (Step 101). Then, tie the remaining 10’ (3.05 m) section of 750# shock cord around the forward section of the motor mount, so that it sits back in the rounded notches of the sled and hangs down away from the open surface of the sled.

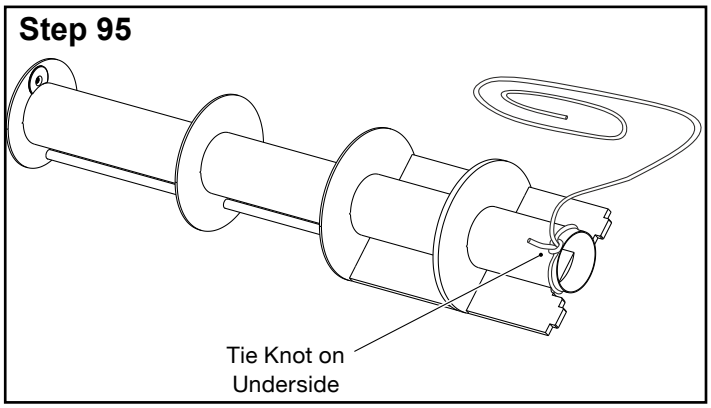

☐ 96. Apply a liberal amount of wood glue to the motor mount tube just aft of the marked line and install the CR-29/38 1/4” Plywood centering ring (P/N 13378), pushing it until it sits behind the engraved line.

Note: This ring is expected to be loose on the tube; this is no cause for concern.

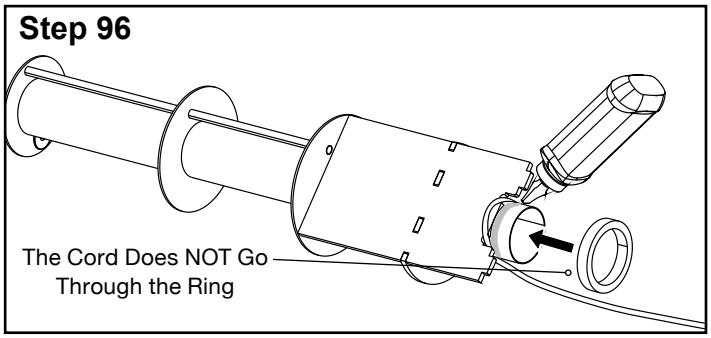

☐ 97. Apply more wood glue to the tabs on the ebay sled, the forward face of the 1/4” plywood ring installed in the last step, and around the motor mount tube. Then route the shock cord through the central hole of the forward centering ring (**CR1**) and install **CR1** into place. Ensure that the shock cord is routed through the small rounded notch on **CR1**, that is opposite of the sled, and that **CR1** is secured tightly against the 1/4” plywood ring (P/N 13378) and the ebay sled. Pull the shock cord tight against the forward centering ring (CR1) and the 1/4” support ring. Fold the shock cord into a bundle approximately 6” (150 mm) long, to make it easier to work with the motor mount assembly in future steps.

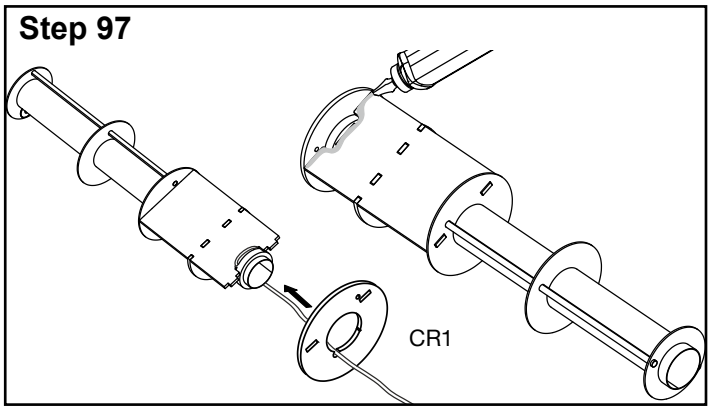

☐ 98. Apply wood glue fillets to the joint between the sled and motor mount tube, as well as to both sides of each of the centering rings, and along the shock cord at the aft side of the support ring. Allow the fillets to dry entirely, then place the bundle of shock cord inside the motor mount tube to keep it out of the way.

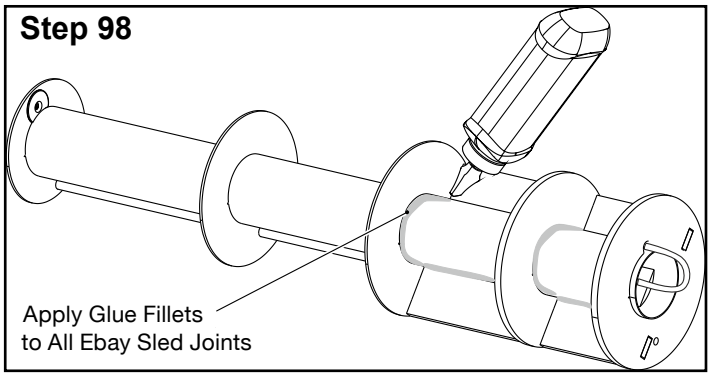

Parts Required for Steps 99-105

P/N 40096
1/8” Plywood Sheet

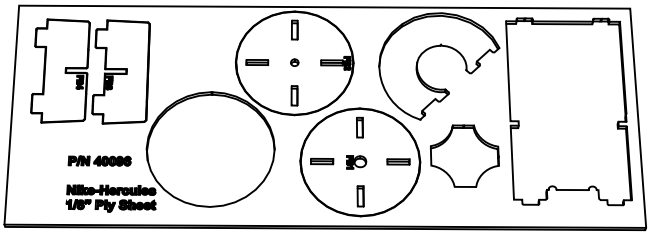

2 ft. of Remaining
750# Kevlar

P/N 24057
1/4” x 3” Heat Shrink

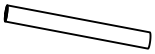

Hercules Missile—Nose Cone Bulkhead

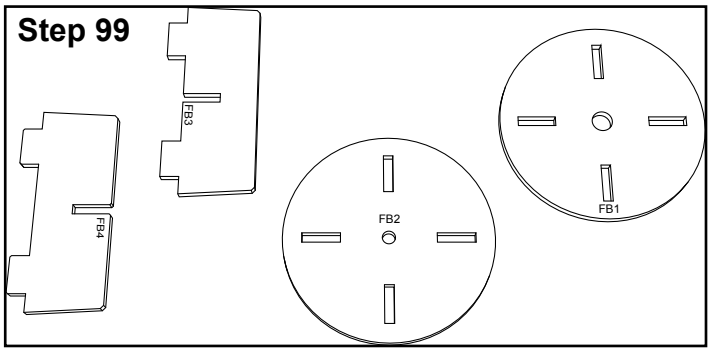

☐ 99. Remove parts **FB1**, **FB2**, **FB3**, and **FB4** from the 1/8” Plywood Sheet (P/N 40096) using a sharp hobby knife.

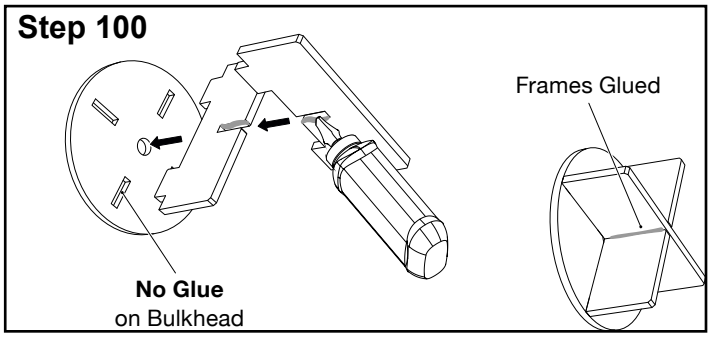

☐ 100. Wood glue the two frame sections **FB3** and **FB4** together, then use the first bulkhead disk (**FB1**) to keep them aligned while the glue dries. Do not glue it into the bulkhead.

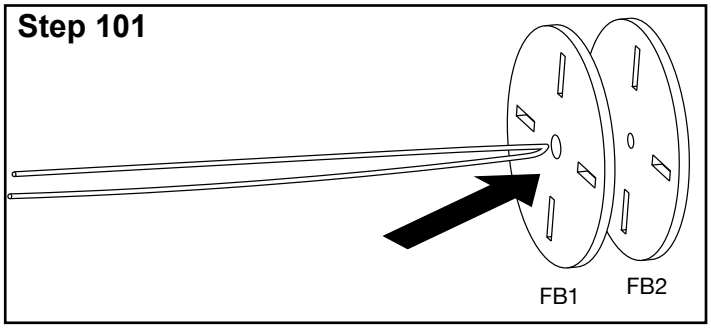

☐ 101. After the glue has dried from Step 100, Remove the first bulkhead disk (**FB1**) from the frames (**FB3** and **FB4**). Fold the remaining 24” (610 mm) of 750# Kevlar shock cord (from Step 95) in half, and pass the folded section through disk **FB1** (with the larger central hole), then **FB2** (with the smaller central hole).

☐ 102. Dry fit – **without glue** – the disks onto the frame with the loose tails of the shock cord split on opposite sides of the frame. Tie a knot into the shock cord that loops over the top of the frames, and pull the shock cord tight, against the frames.

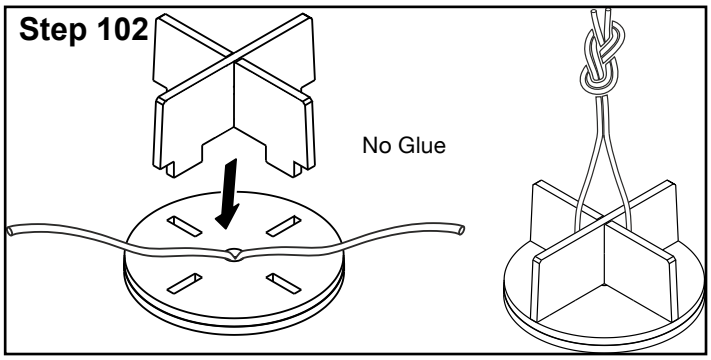

☐ 103. Pull the disks slightly away from the frame, and glue **FB1** into place on the frame with wood glue. Apply glue to the tabs and aft edges of the frames (**FB3** and **FB4**).

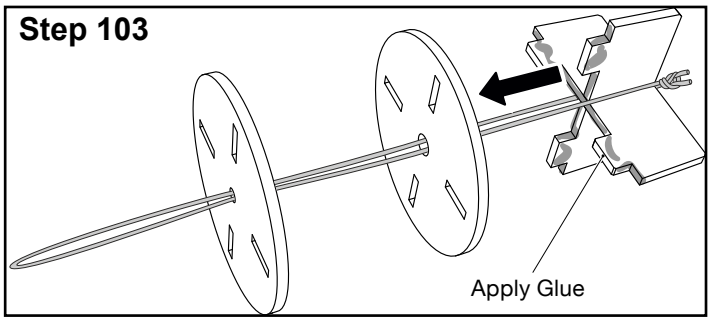

☐ 104. Next, apply wood glue to the protruding tabs and to the surface of the forward bulkhead disk **FB1** (installed in the last step). Install disk **FB2**. Pull the shock cord tight and apply wood glue to the knot at the front, over the frames, and apply fillets to the area of the shock cord that passes down in the corners between the frames.

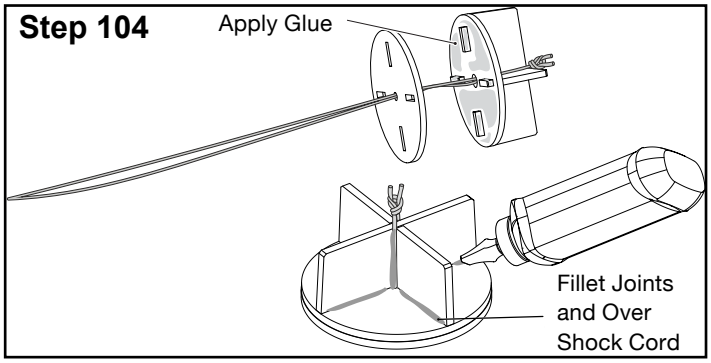

☐ 105. Tie a small loop (1”, 25 mm, long) at the end of the Kevlar, and apply a 1” (25 mm) section of heat shrink tubing over the knot.

Note: the heat shrink may be a tight fit over the knot, but a slight twist of the Kevlar will help it to slide into place. Set the assembled nose cone bulkhead aside to dry entirely.

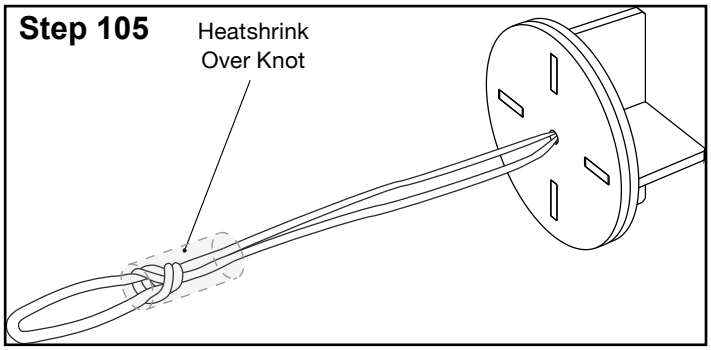

Parts Required for Steps 106-130

4x P/N 15506
1/8” Main Fin Basswood Sheet

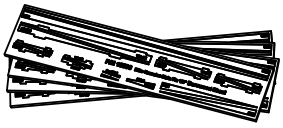

2 x P/N 40090
Cardstock Sheet A

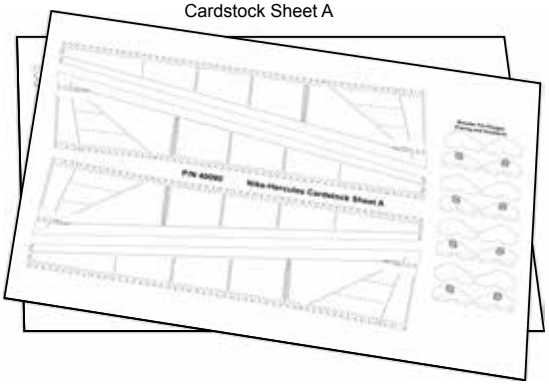

P/N 40093
1/16” Plywood Sheet A

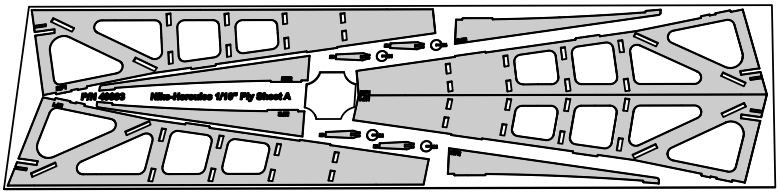

P/N 15511
1/8” Balsa Sheet

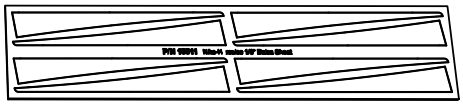

Hercules Missile—Main Fins

☐ 106. Using a sharp hobby knife, remove the four aft main fin cores **MF1** from the 1/16” Plywood Sheet A (P/N 40093), then sand any remaining tabs off the edges with medium sandpaper (220 grit). To ensure the straightest assembly possible, tape the fin cores down to the work surface using masking tape, avoiding the root edge to allow initial assembly.

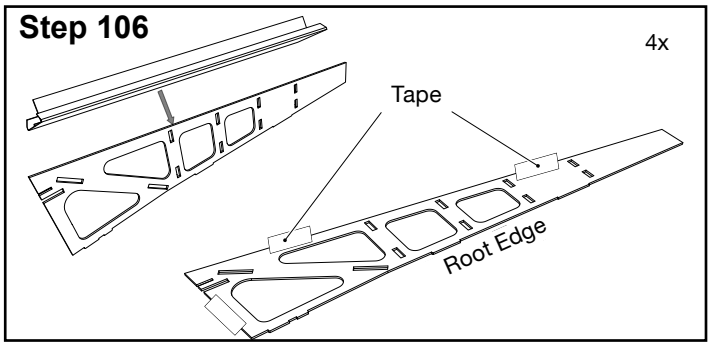

☐ 107. Remove the first set of four main fin peak formers (**MF10A**) from each of the Nike-Hercules Main Fin 1/8” Basswood Sheets (P/N 15506). Sand any remaining tabs off, and glue them into the main fin cores (**MF1**) with medium CyA adhesive. Avoid excess adhesive in the alignment slots in order to make assembly of the opposite side easier. Note: one corner of the fin peak parts will extend past the root edge of the fin core–this is expected and will be removed later.

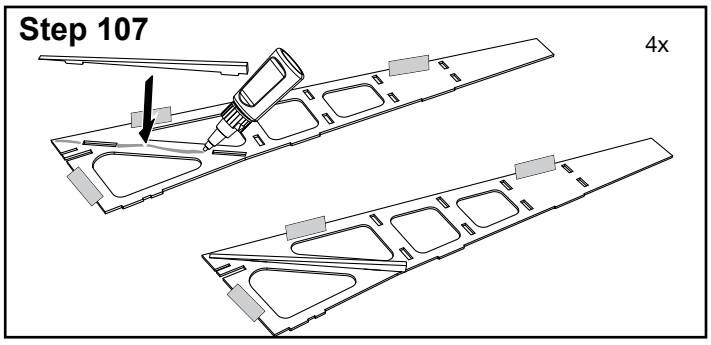

☐ 108. Remove four of the forward root formers (**MF3**) from the Main Fin 1/8” Basswood Sheets (P/N 15506), and glue them into place – flush with the root edge of the fin core – using medium CyA adhesive. Press the aft end of the former into the peak former (**MF10A**) installed in the last step, to ensure a strong final assembly. It is okay if the root former does not reach the leading edge, as any inaccuracy there will be corrected later.

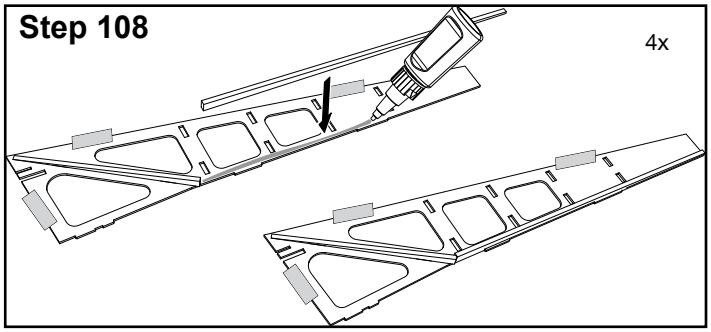

☐ 109. Remove four of the aft root formers (**MF9**) from the Main Fin 1/8” Basswood Sheets (P/N 15506), and glue them into place. Press the root former into the peak former, and align it flush with the root edge.

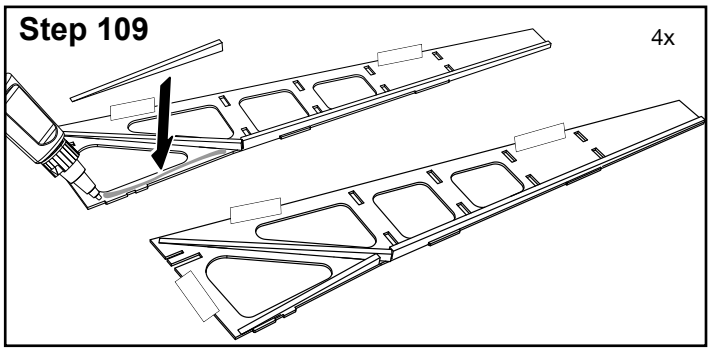

☐ 110. In descending order, remove and install the remainder of the tabbed formers (**MF8A**, **MF7A**, **MF6A**, and **MF5A**) on the already begun A side. Work with one at a time to prevent confusion between the formers. Remove each former from a Main Fin 1/8” Basswood Sheet (P/N 15506), test fit sanding until the former fits flush with the core, then glue the former in place with medium CyA adhesive. If the tape holding the fin down is in the way of a former, remove or reposition the tape on that portion.

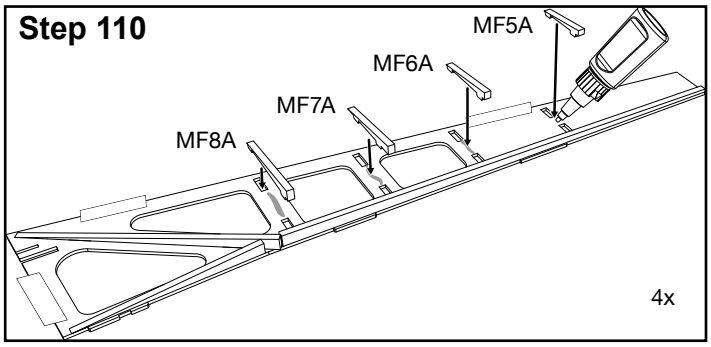

☐ 111. Install the small forward former **MF4** on the fin by removing it from the Main Fin 1/8” Basswood Sheet (P/N 15506), and gluing it with medium CyA adhesive, so it’s flush with the forward edge of the fin core, and tight against the root former. The outward facing surface is marked by a small protuberance that will be sanded off while forming the fin. Allow the adhesive on the first side of the main fins to cure completely before continuing.

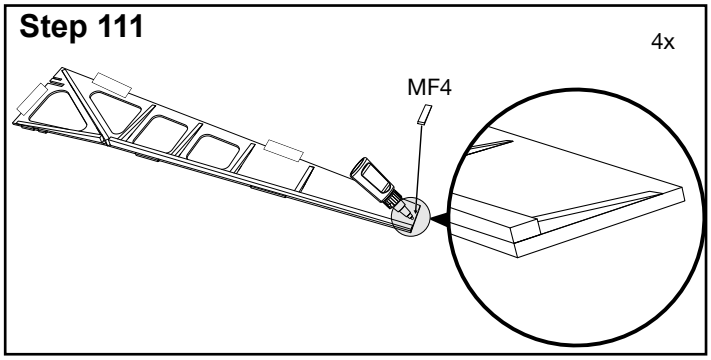

☐ 112. Once dry, remove the tape from the main fin structures to complete the other sides. Following the same process as the first side, remove the **MF10B** main fin peak formers from the Main Fin 1/8” Basswood sheets (P/N 15506). Test fit the formers before installation, and sand with a flat needle file or medium sandpaper (220 grit) until they fit with their lower surface flush to the fin core. Glue into place using medium CyA adhesive. Again, a corner of the fin peak will extend beyond the fin core.

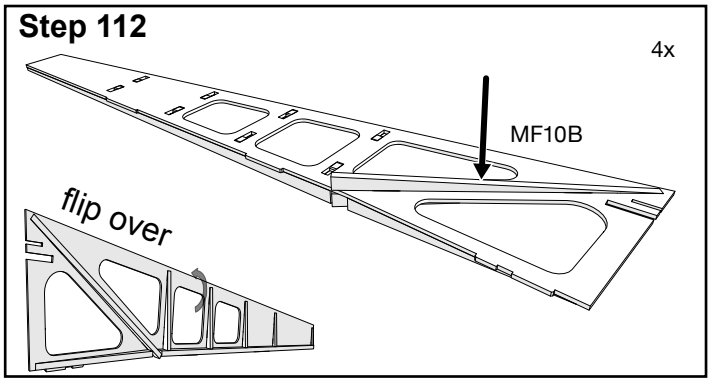

☐ 113. Remove the remaining forward (**MF3**) and aft (**MF9**) root formers from the Main Fin 1/8” Basswood Sheets (P/N 15506), and install as before – pressed against the peak former, and flush with the root of the fin core. Glue into place using medium CyA adhesive.

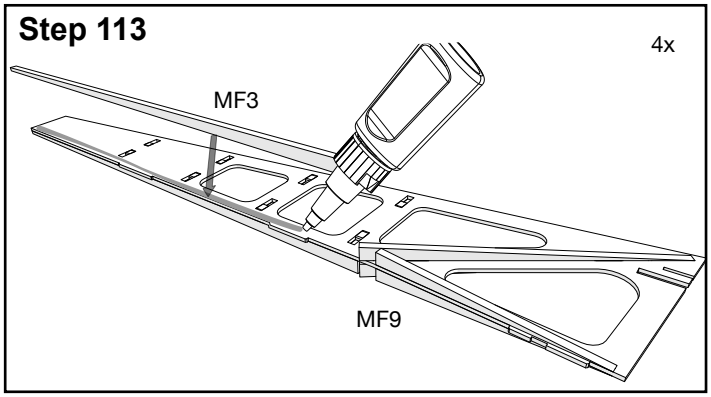

☐ 114. Install the remaining tabbed formers (**MF8B**, **MF7B**, **MF6B**, and **MF5B**) as was done on the opposite side. Remove each former from a Main Fin 1/8” Basswood Sheet (P/N 15506), test, sand to fit, and glue into place with medium CyA adhesive.

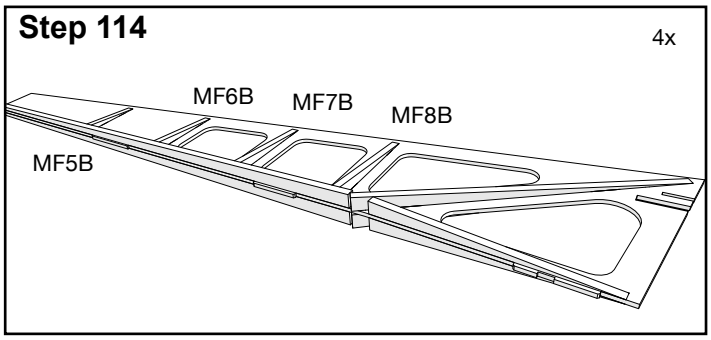

☐ 115. Install the final (forward) formers (**MF4**) by removing them from the Main Fin 1/8” Basswood Sheets (P/N 15506), and gluing them tightly against the root former, and flush with the forward edge of the fin core using medium CyA adhesive.

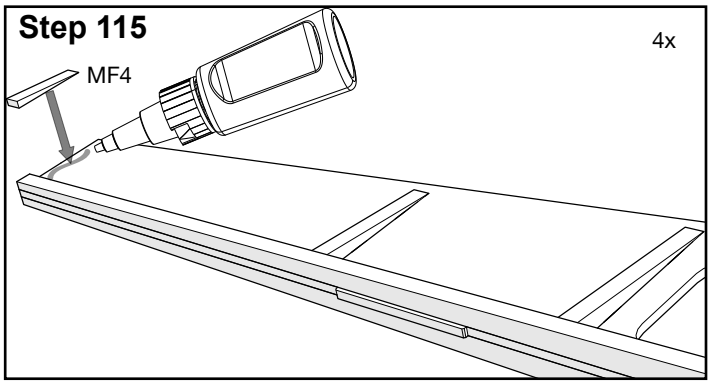

☐ 116. Remove the balance fairing doubler (**MF11**) from the Main Fin 1/8” Basswood Sheets (P/N 15506). Sand carefully to ensure a good fit, and glue into place within the fin structure – tight against the peak formers – using wood glue.

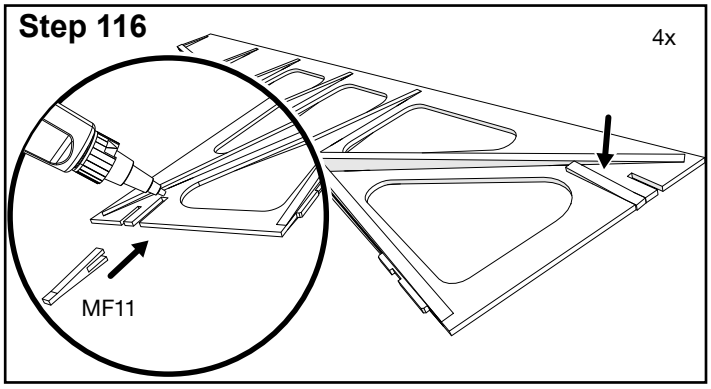

☐ 117. Reinforce the fins by applying fillets to the joints between the root and peak formers (**MF3**, **MF9**, **MF10A/B**) with wood glue. Allow the entire fin frame to dry entirely before continuing.

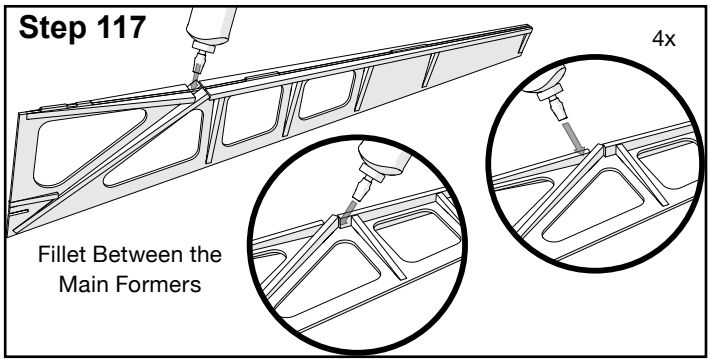

☐ 118. Use coarse sandpaper (80 grit) to shape the fin structures so that the resulting chamfer on the fin cores is parallel to the outer surface of the formers, and the core edge is approximately 1/32” (1 mm) thick. The chamfer should be roughly 3/16” (5 mm) wide. Finally, ensure that the protuberance on the forward formers (**MF4**) is sanded flush with the surface of the fin.

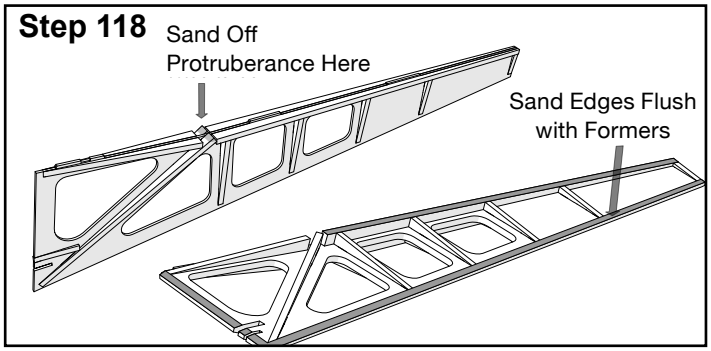

☐ 119. Remove the elevon upper hinge mount (**E3**) from the 1/16” Plywood Sheet A (P/N 40093). Sand the surface and edges of **E3** Smooth with medium sandpaper (220 grit), and glue **E3** Into place at the aft edge of the fins using medium CyA adhesive. Allow the built-up fins to cure entirely before applying the paper facings.

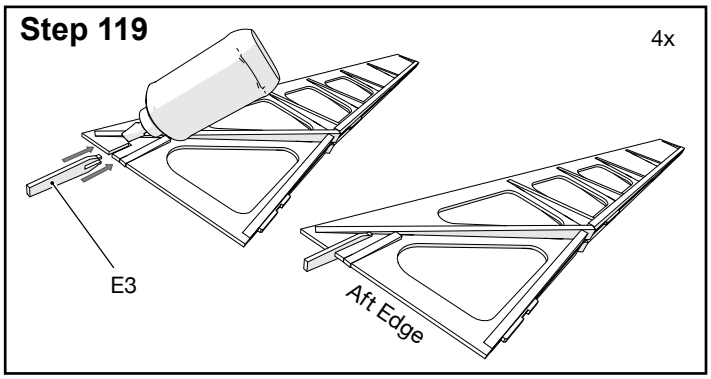

☐ 120. Use a small rounded dowel, bone folder, or knitting needle to indent the fin peak lines on all of the main fin facing sheets – found on the two Cardstock Sheet A (P/N 40090). Then, cut the fin facings out using a sharp hobby knife and straightedge.

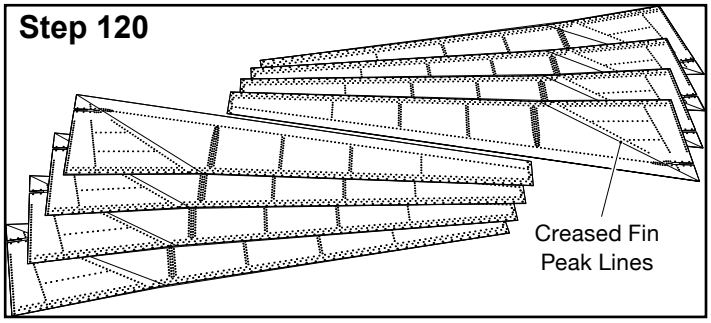

☐ 121. Crease the fin facings – such that the markings are facing out – along the peak line and sort into left/right pairs.

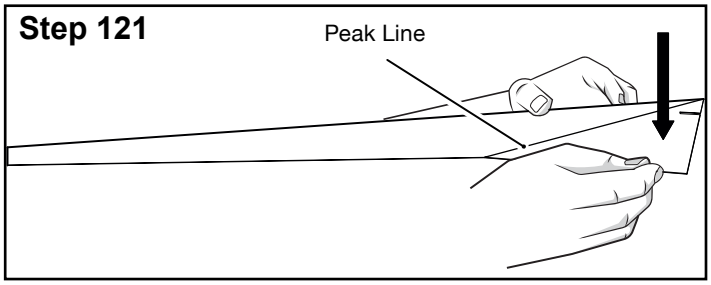

☐ 122. Glue the fin facings onto the fin structures in pairs, by applying a thin layer of wood glue to the chamfers on the fin core and the surfaces of all of the formers. Ensure that the facings are aligned to the peak and well adhered before setting the covered fins aside to dry completely.

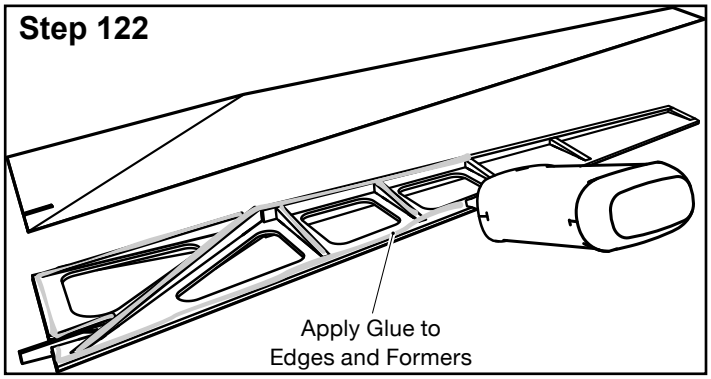

☐ 123. Once the glue has dried entirely, apply a bead of thin CyA adhesive to the exposed edges of the fin cores and allow the adhesive to cure entirely. Use fine sandpaper (400 grit) to sand the edges of the fins smooth.

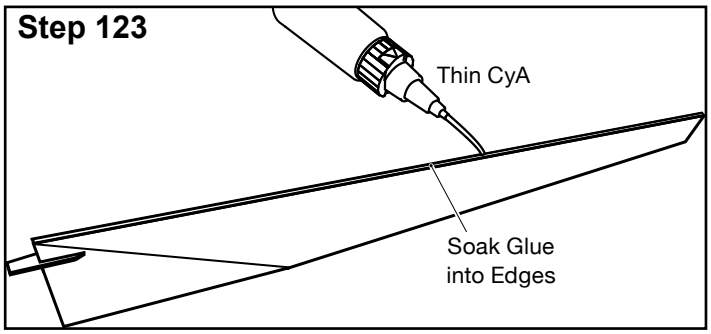

☐ 124. Seal the paper facings by applying two or three light coats of lacquer clear coat to the exterior of each fin. Allow the finish to dry between coats and sand lightly with fine sandpaper (400 grit) between coats.

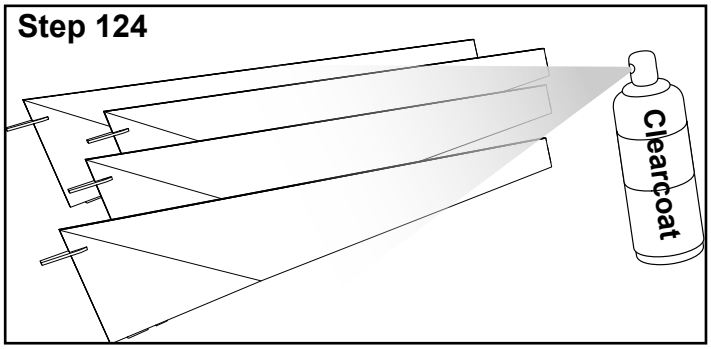

☐ 125. Remove the four main fin forward cores (**MF2**) from the 1/16” Plywood Sheet A (P/N 40093), and the eight main fin forward facings from the Nike-Hercules 1/8” Balsa Sheet (P/N 15511).

Note: Hold onto the scrap balsa in case the forward and aft sections of the main fins require gap filling later (used in Step 182).

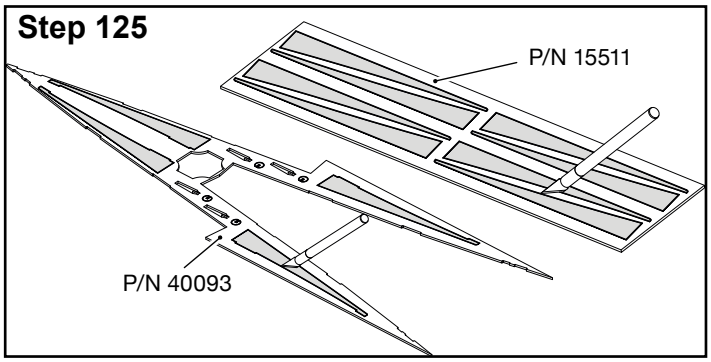

☐ 126. Glue one balsa main fin forward facing on either side of each of the four plywood cores (**MF2**) using medium CyA adhesive - take care to align the balsa flush with the aft edge of the fin cores.

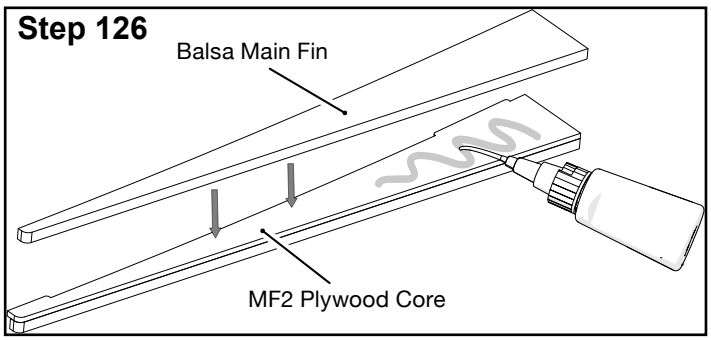

☐ 127. Use coarse sandpaper (80 grit) to do the initial shaping of the forward main fin sections. As a sanding indicator, wrap the back 1/4” (6 mm) of the fin blank. To begin shaping: taper the fin blanks in the long direction, from the full width of the blank at the tape, down to the plywood core at the front.

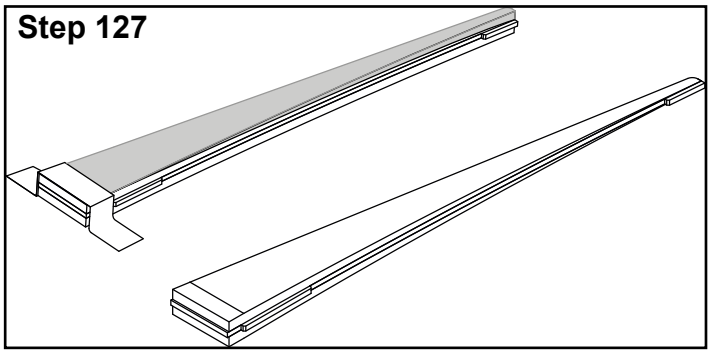

☐ 128. Again, using coarse sandpaper (80 grit), create the triangular cross-section of the forward main fin sections by sanding a taper from the root edge of the fins up to the plywood core.

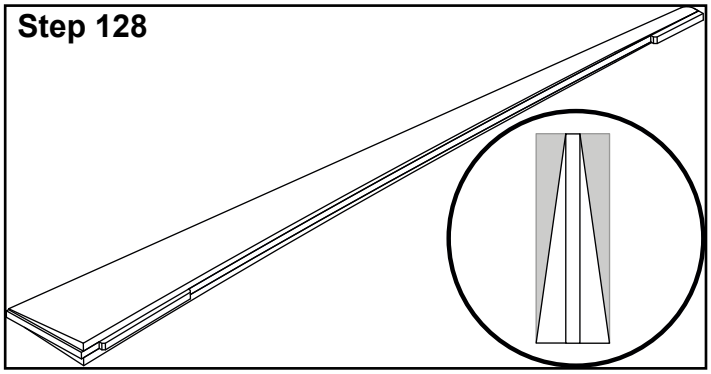

☐ 129. Using the completed aft main fins as references, use medium sandpaper (220 grit) to finalize the shape of the forward main fin sections. Smooth the surface of the forward sections, and ensure that the cross-section at the joint closely matches the cross-section of the built-up aft sections.

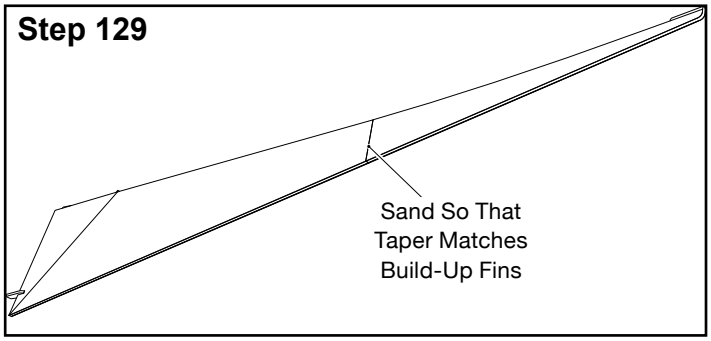

☐ 130. Apply a coat of sanding sealer or filler to the forward main fin sections, then sand flat with fine sandpaper (400 grit). Repeat until the wood grain is filled and the surface of the fins is smooth.

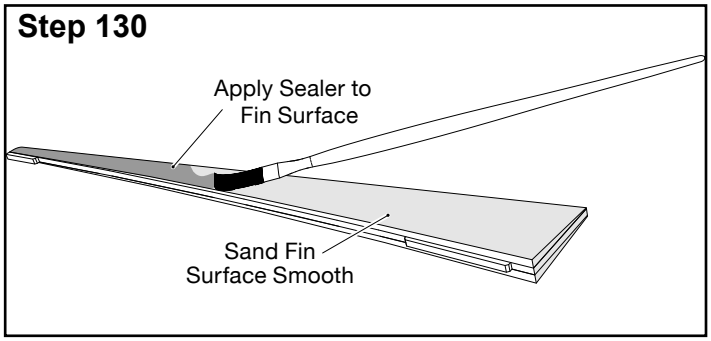

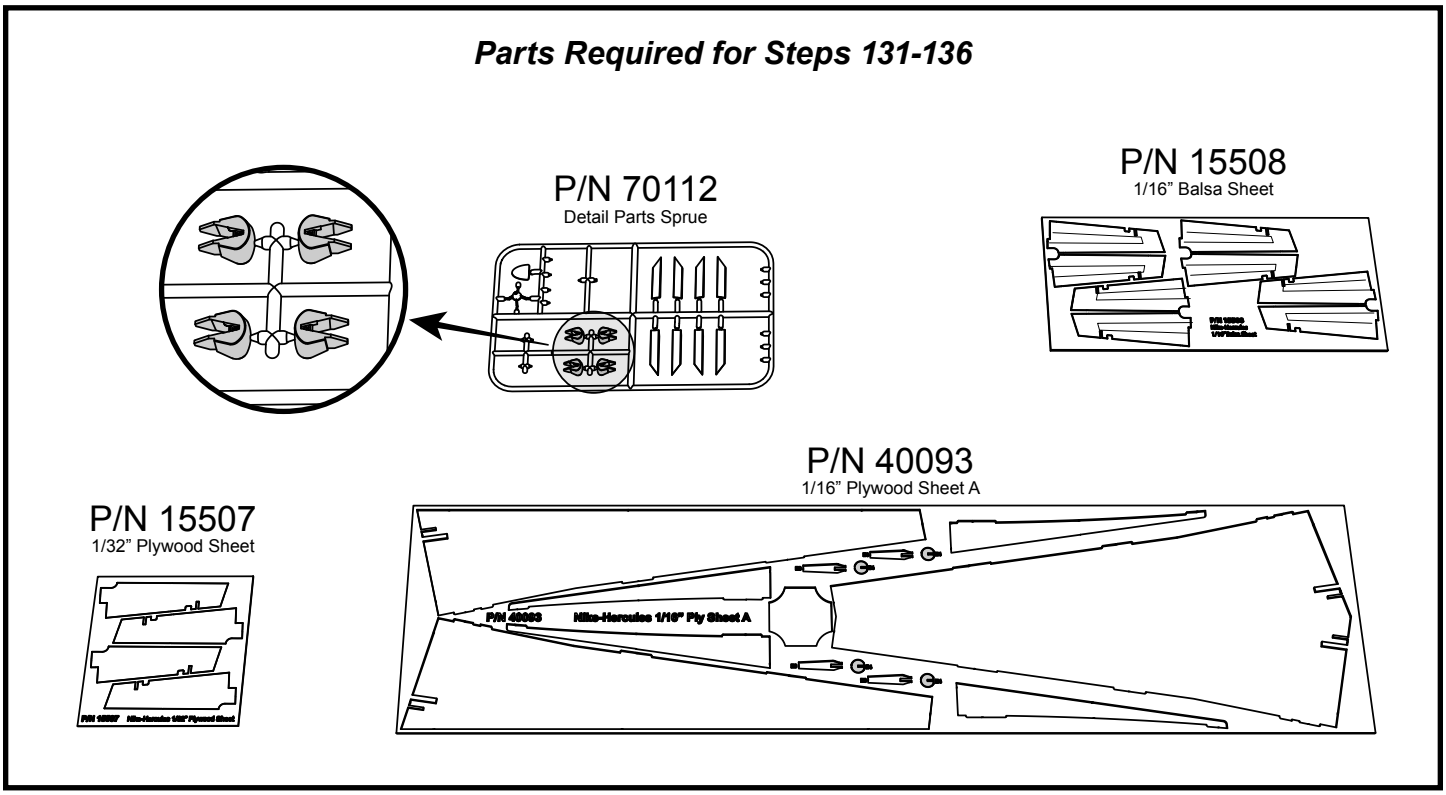

Hercules Missile—Elevons

☐ 131. Remove the four elevon cores (**E1**) from the Nike-Hercules 1/32" Plywood Sheet (P/N 15507), and the eight elevon facings from the Nike-Hercules 1/16" Balsa Sheet (P/N 15508).

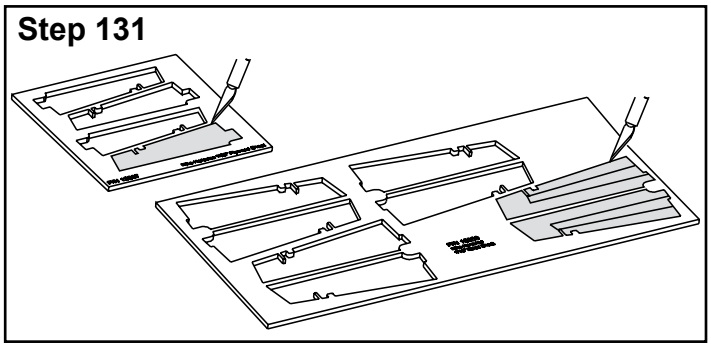

☐ 132. Glue one balsa facing on either side of the elevon cores using medium CyA adhesive. There are A and B side facings which are mirrored so that they can be placed on both sides of the core. Apply these pairs so that the engraved lines are visible on the outside of the finished fin blank.

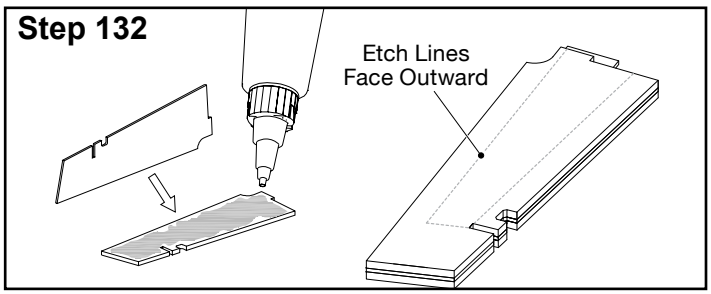

☐ 133. Use coarse sandpaper (80 grit) to do the bulk shaping of the elevons. Sand a chamfer from the plywood core, up to the engraved line on both sides from the front, and rear of the fin, then sand the chamfer from the fin tip into the engraved line. Once the fin has been properly shaped, smooth the surface with medium sandpaper (220 grit) so that the exposed elevon edges are sharp and any remnants of tabs are removed.

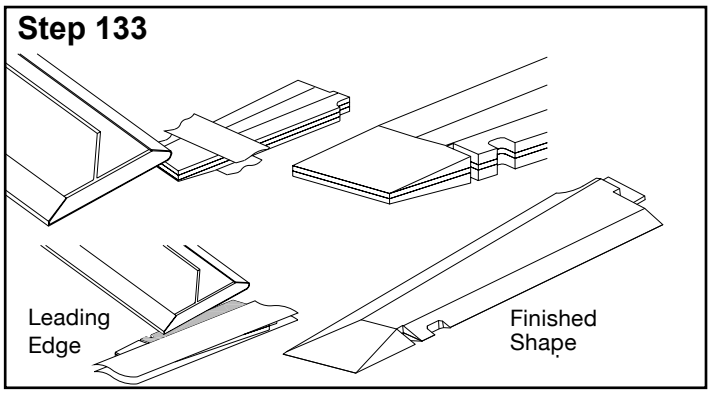

☐ 134. Remove the small elevon hinge details (**E4**) from the 1/16” Plywood Sheet A (P/N 40093), sand gently with medium sandpaper (220 grit) to smooth the surface and remove any remnants of tabs, and install the parts at the root of the elevons using medium CyA adhesive. Allow the elevons to cure entirely.

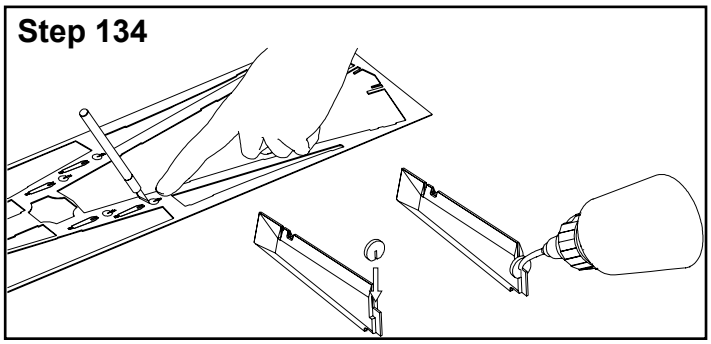

☐ 135. Apply a coat of sanding sealer or filler to the elevons, then sand flat with fine sandpaper (400 grit). Repeat until the wood grain is filled and the surface of the fins is smooth.

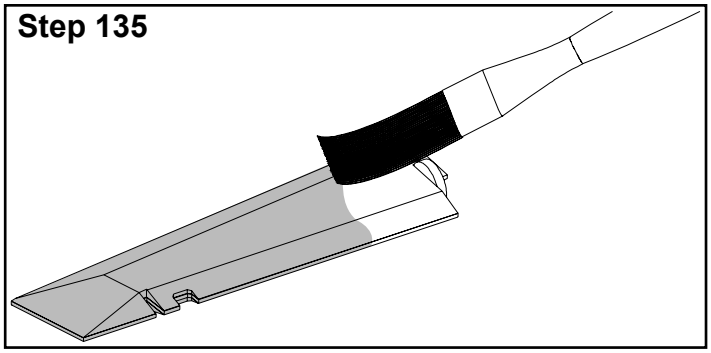

☐ 136. Remove the four dynamic balance weights from the Nike-Hercules Detail Parts (P/N 70112) sprue, and clean off any sprue remnants with fine sandpaper (400 grit). Test fit the balance weights on the elevons, sand to fit if required using a needle file, and install the balance weights dry. Secure them in place with thin CyA adhesive.

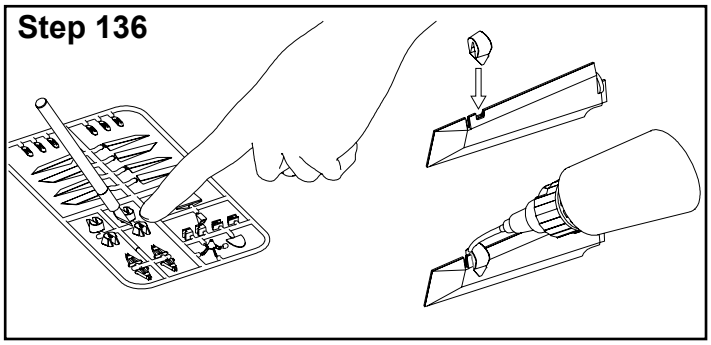

Parts Required for Steps 137-148

P/N 29029
1/16” x 12” Brass Welding Wire

P/N 15510
3/32” Balsa Sheet

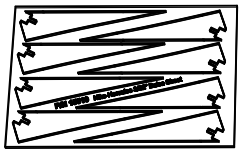

P/N 40095
1/16” Plywood Sheet C

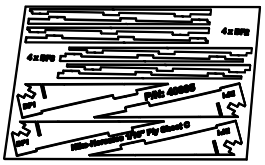

P/N 14263
1/8” x 2-1/2” Dowel

P/N 40092
Cardstock Sheet C

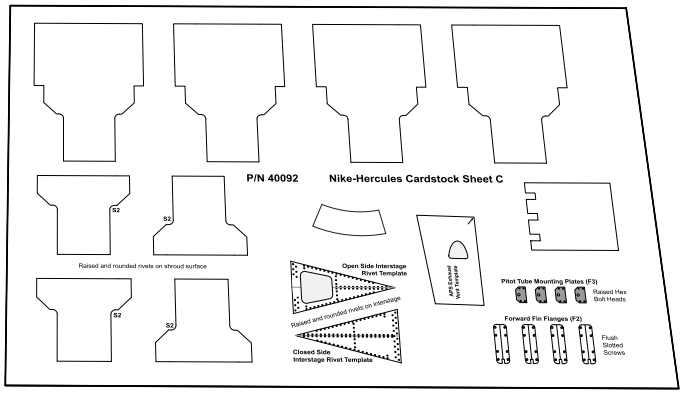

Hercules Missile—Elevons

☐ 137. Remove the four destabilizer cores from the Nike-Hercules 1/16” Plywood Sheet C (P/N 40095) , then remove the eight destabilizer facings from the Nike-Hercules 3/32” Balsa Sheet (P/N 15510).

It is worth noting that the destabilizer shape described in these instructions is only an approximation of the scale shape. The scale shape of the destabilizers has a complex set of bevels that are difficult to form accurately. The approximation shown here looks very similar and is easy (by comparison) to form.

Step 137

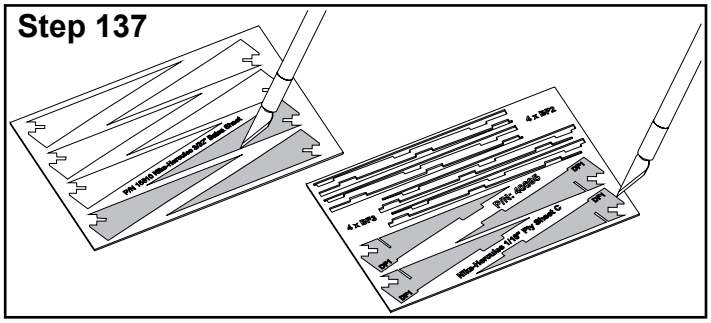

☐ 138. Attach the destabilizer facings to either side of the plywood cores using medium CyA adhesive, taking care to align the facings with the root and aft edges of the destabilizer cores.

Step 138

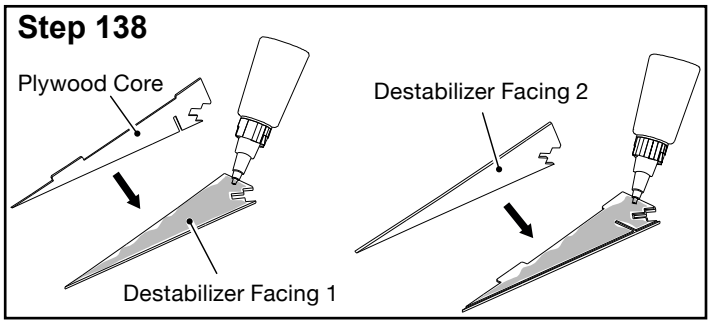

☐ 139. Apply masking tape to the aft end of the blanks centered on the antenna slots. This tape should slope back at the same angle as the slots, and cover the entire aft section of the fin blank.

Step 139

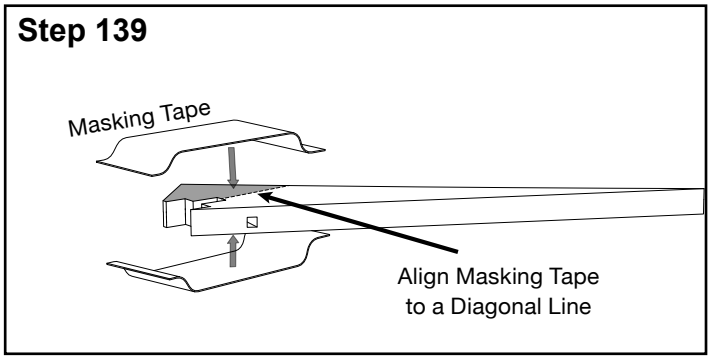

☐ 140. Using medium sandpaper (220 grit), sand a taper into the blanks from the forward point of the fin back to the edge of the tape.

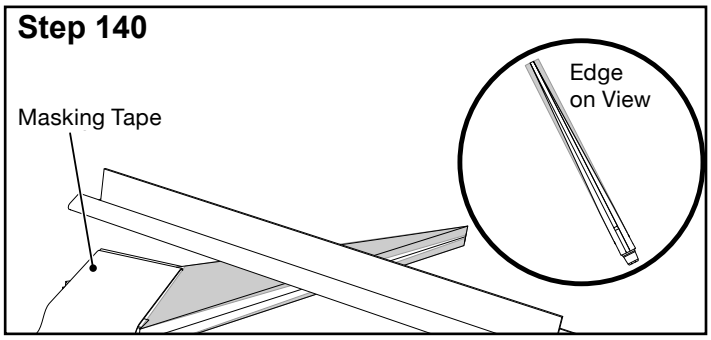

☐ 141. Remove the masking tape from the fins and sand the forward edge of the destabilizer fins round using medium sandpaper (220 grit).

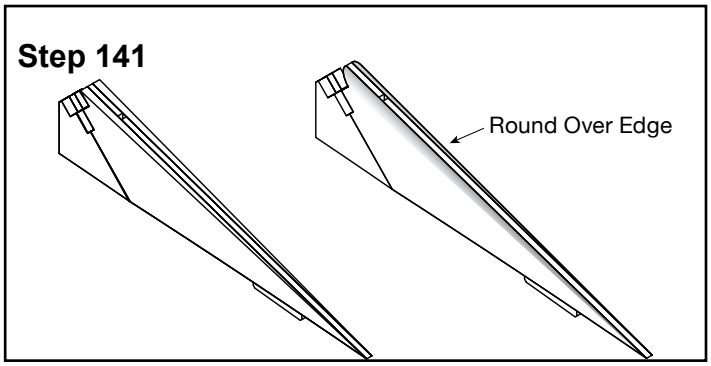

☐ 142. Use medium sandpaper (220 grit) to sand a slight taper, from the same tape line to the back of the fin, leaving approximately 1/32” (0.8 mm) of balsa on either side of the core. Leave a sharp break along the tape line to represent the roughly double-diamond shape.

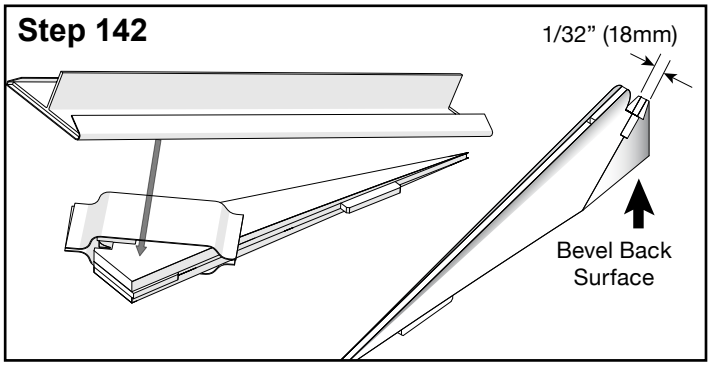

☐ 143. Use a sharp hobby knife to cut four 1/2” (12 mm) long segments of the 1/8” dowel (P/N 14263). Use medium sandpaper (220 grit) to square the edges and ensure that the dowel segments are all of equal lengths.

- Antenna Cut Guide

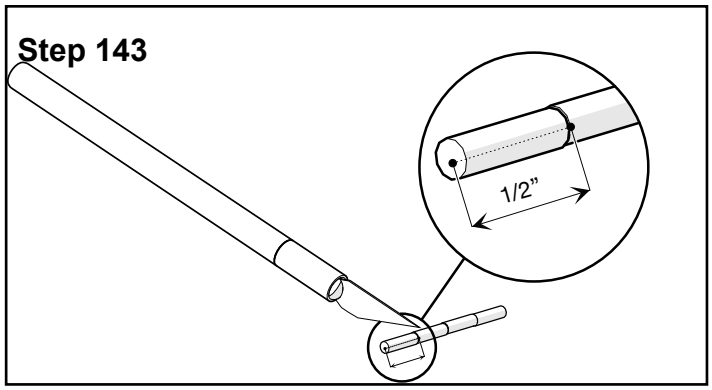

☐ 144. Glue the dowels into the pockets at the aft end of the destabilizing fins, using medium CyA adhesive, and allow the fins to cure entirely.

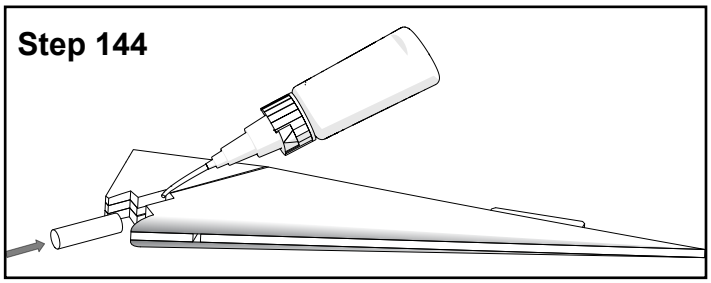

☐ 145. Apply a thick coat of wood filler to the gap in the destabilizing fins next to the dowels, and sand back to the surface of the wood using a combination of medium sandpaper (220 grit) and needle files.

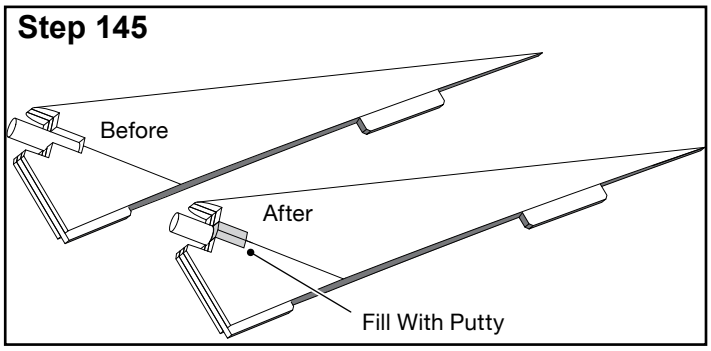

☐ 146. Remove the four pitot tube mounting plates (**F3**) from Cardstock Sheet C (P/N 40092). Cut out the cardstock plates, and puncture them in the small gray circle using the included (1/16”, 1.6 mm) brass wire (P/N 24029).

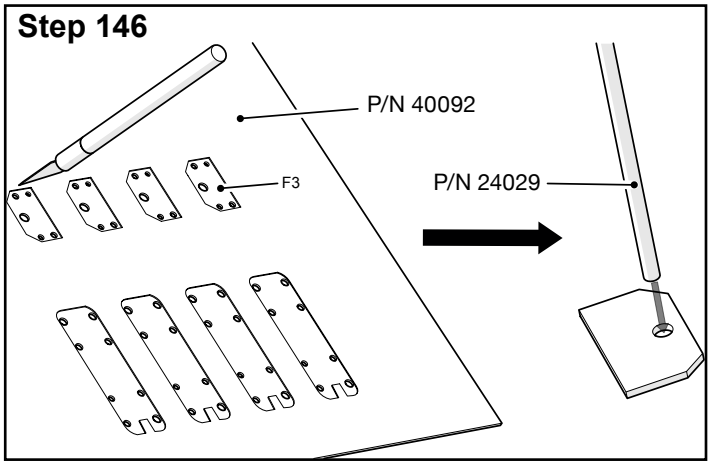

☐ 147. Pre-form the mounting plates (**F2**) by forming them over a small dowel so that they form a U shape when viewed from the side. Install on the destabilizer fins with medium CyA adhesive using the brass wire to guide proper alignment. Apply pressure to all the edges of the plates to ensure that they are well adhered.

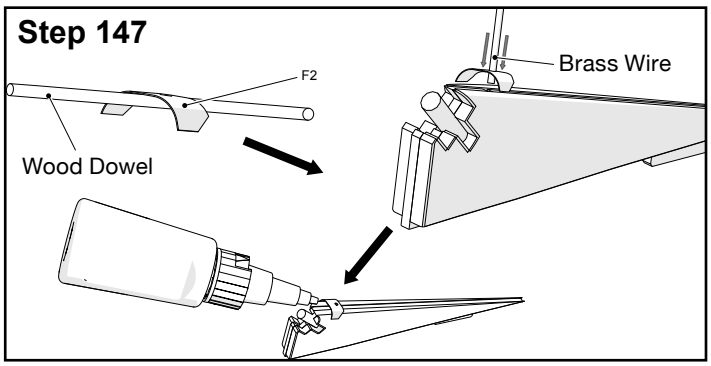

☐ 148. Apply a coat of sanding sealer or filler to the destabilizers, then sand flat with fine sandpaper (400 grit). Take care sanding around the cardstock details to avoid rounding the corners, and repeat until the wood grain is filled and the surface of the fins is smooth.

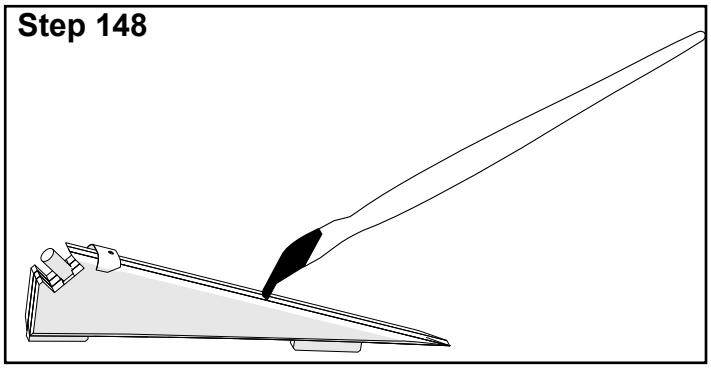

Parts Required for Steps 149-163

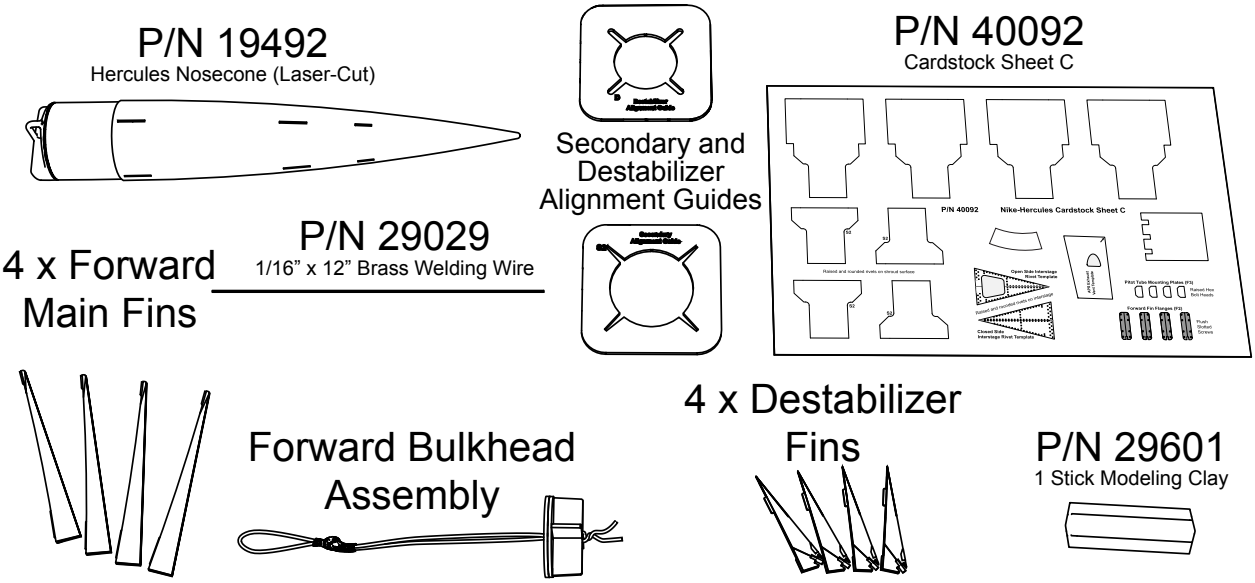

Hercules Missile—Forward Section Assembly

☐ 149. Before mounting the forward fins on the Hercules missile, the nose cone must be prepared. To begin, ensure that the fin slots are entirely clear. Carefully use a hobby knife to remove any plastic that remains in the slots.

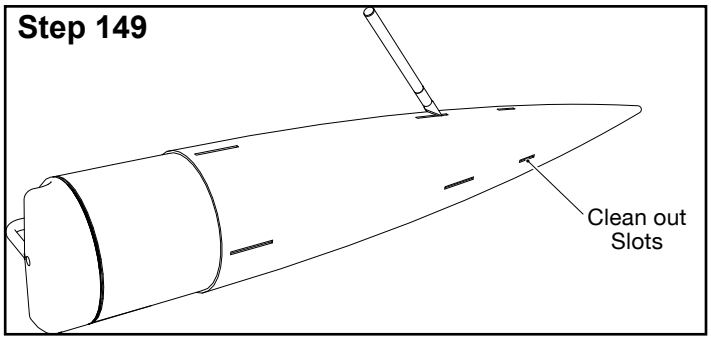

☐ 150. Once the slots are clear, gently sand the surface of the nose cone over the slots with a fine (400 grit) sandpaper to remove any burrs that may impede installing the fins flush to the surface.

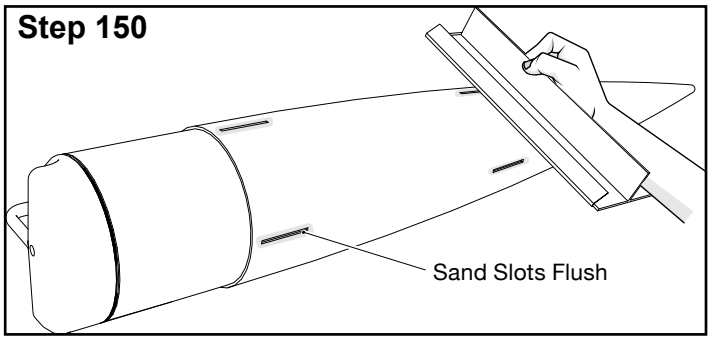

☐ 151. There is a 1/16” hole drilled at the very tip of the nose cone to provide a mounting location for the decorative, multi-axis, pitot-static probe. Ensure that the brass wire slides into the hole. If necessary, clean up the hole with fine sandpaper (400 grit).

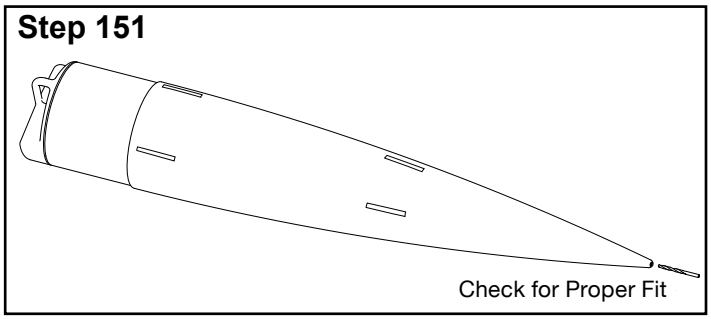

☐ 152. Use a razor saw or hobby knife to cut the back end of the shoulder off the nose cone by cutting in the groove that passes next to the loop. Use medium sandpaper (220 grit) to square and clean up any burrs on the cut edge.

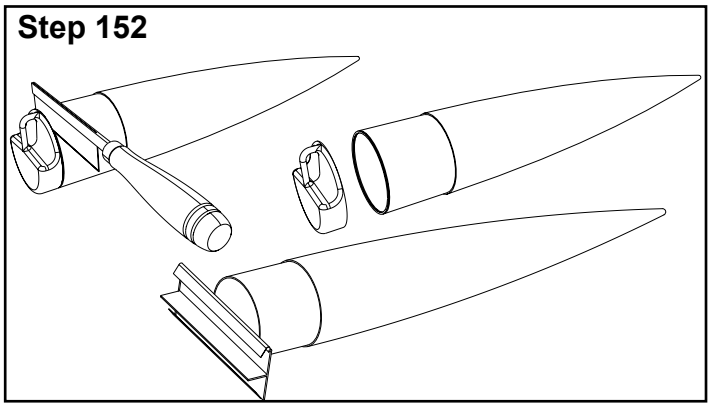

☐ 153. Sand the interior of the nose cone with fine sandpaper (400 grit) approximately 6” to 7” inches (150 to 180 mm) from the back of the shoulder to improve adhesion of the forward bulkhead assembly.

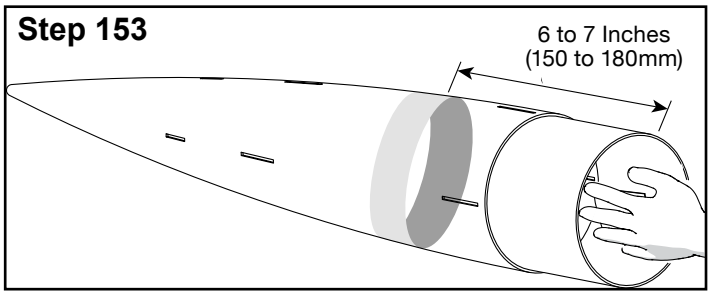

☐ 154. Cut out the four forward fin flanges (**F2**) from Cardstock Sheet C (P/N 40092) with a sharp hobby knife.

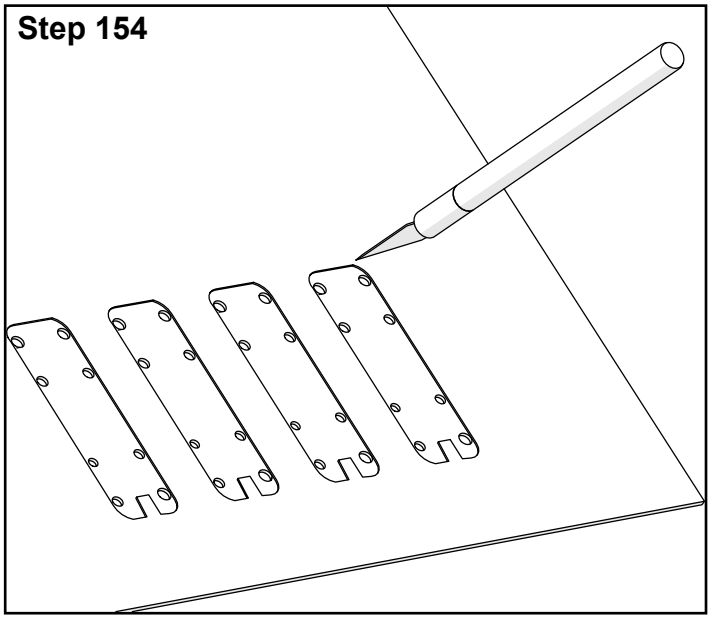

☐ 155. Use masking tape along the four fin slot center lines and mark a straight line with a pencil.

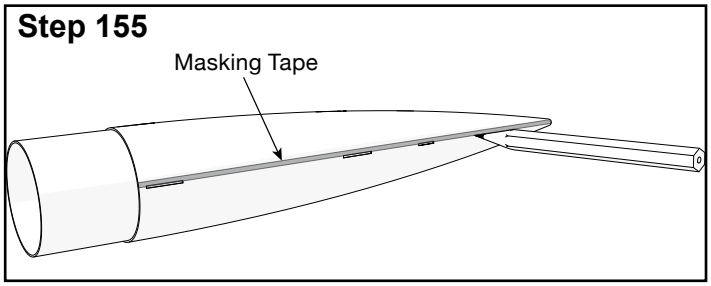

☐ 156. Apply a small amount of medium CyA adhesive to the bottom (unprinted side) of each forward flange (**F2**), and install it at the aft side of the middle set of fin slots. The flange should be aligned with the pencil marked centerline, and the notch in the flange aligned with the aft profile of the slot. As the adhesive hardens, press down the edges of the flange firmly to ensure that they do not lift.

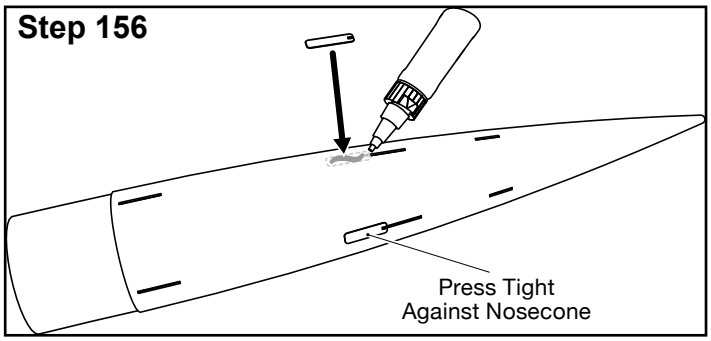

☐ 157. Slide the secondary fin alignment guide (with smaller guide with one set of notches marked **S2**) onto the nose cone, flush with the step just forward of the shoulder. Align the notches with the fin centerlines.

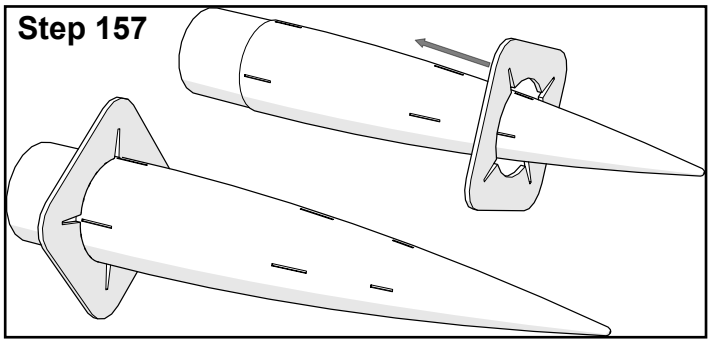

☐ 158. For each forward main fin section, apply medium CyA adhesive to the root surface, and install the fin by placing the tabs into the slots on the nose cone, and the very back section of the fin into the alignment guide. Press the fin back as far as possible to align its back edge with the step on the nose cone. Ensure that the root edge of the fin is flush with the surface of the nose cone. Allow all four fins to cure.

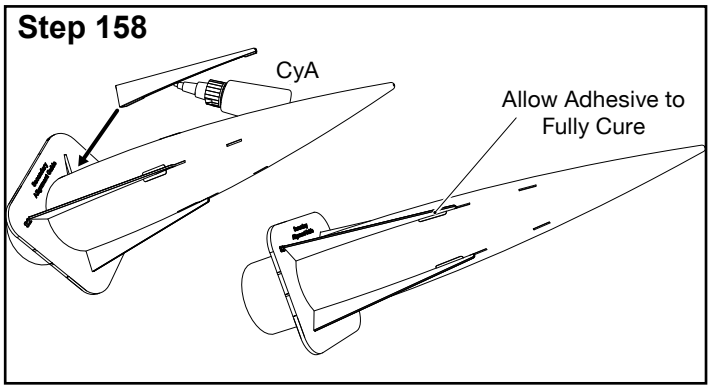

☐ 159. Slide the destabilizer fin alignment guide (with one set of notches marked **D**) onto the nose cone until it stops, and align the notches with the previously installed main fin forward sections.

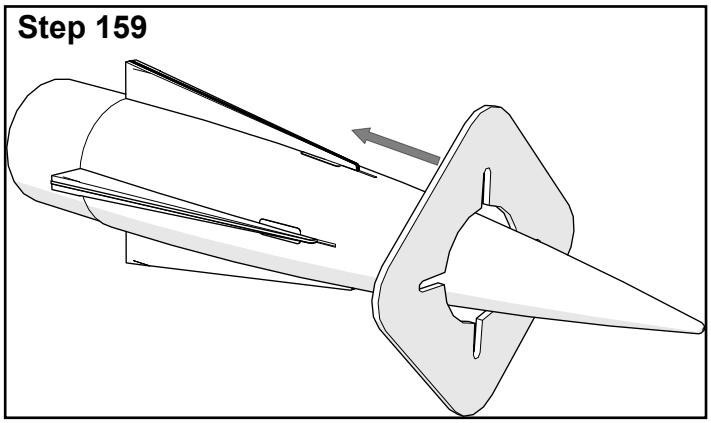

☐ 160. For each destabilizer, apply medium CyA adhesive to the root surface and install the destabilizer. Insert the tabs into the slots and, using the fin alignment guide, ensure correct alignment. As with the forward main fin sections, ensure that the destabilizer fins sit flush with the surface of the nose cone and are fully cured before continuing.

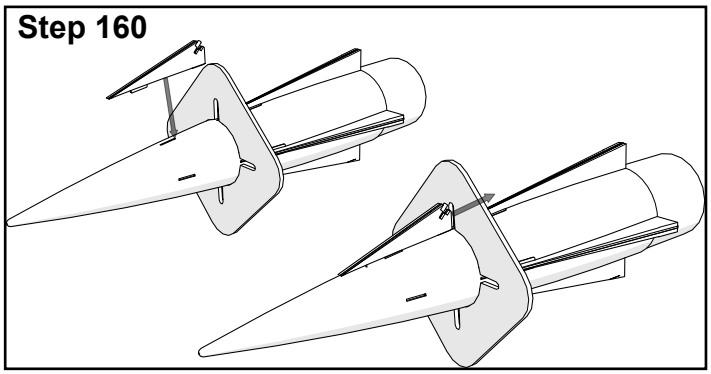

☐ 161. Use a large dowel (approximately 1/2” , 13 mm, in diameter) to press the clay nose weight into the front end of the nose cone. To do so, separate the clay block into small sections – roughly marble sized – to make it easier to compress tightly into the tip of the rocket. Drop them in from the aft end of the nose cone, and press hard to ensure that the nose weight will not shift during flight.

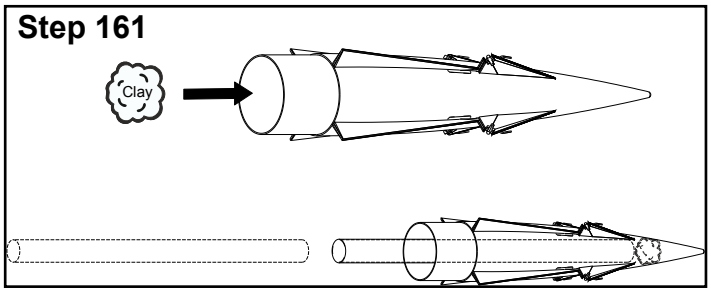

☐ 162. **Dry fit** the forward bulkhead into the forward section, and use a pencil to mark the aft location of the bulkhead on the outside of the nose cone. Wrap a paper towel around the shock cord loop on the forward bulkhead assembly and secure it with masking tape. Then, use a dowel to apply epoxy to the inner surface of the nose cone just forward of the marked location and press the bulkhead assembly tightly into the forward section. Set the nose cone upright so that any excess epoxy will flow back onto the bulkhead assembly and form internal fillets, then allow the epoxy to cure.

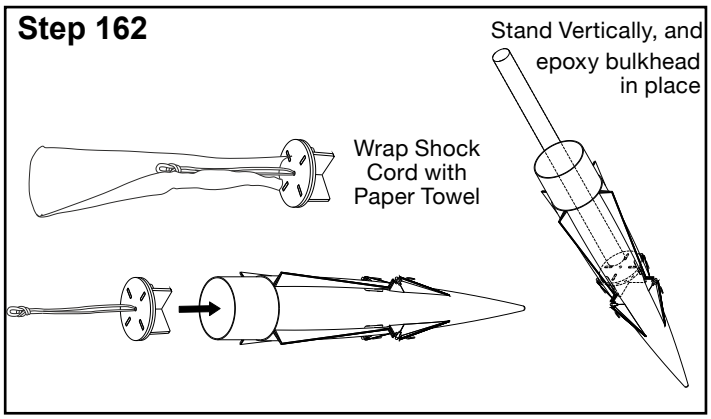

☐ 163. Apply small (1/8” or 3mm diameter) epoxy fillets at the base of the forward main fins and destabilizers using a filled epoxy. To minimize the potential of epoxy ending up in the wrong place, apply masking tape a small distance (3/32”, 2 mm) from the joint. Then, once masked, apply thickened epoxy to the joint, and shape with a small dowel (1/8”, 3 mm). Once the epoxy has cured to the point of holding its shape, remove the masking tape. If the tape is left on until the epoxy cures entirely, it will be much more difficult to remove.

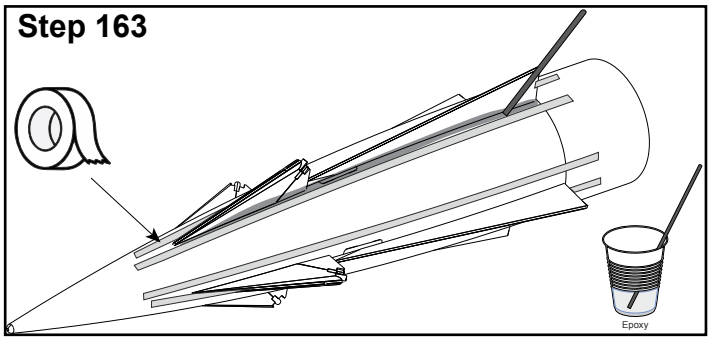

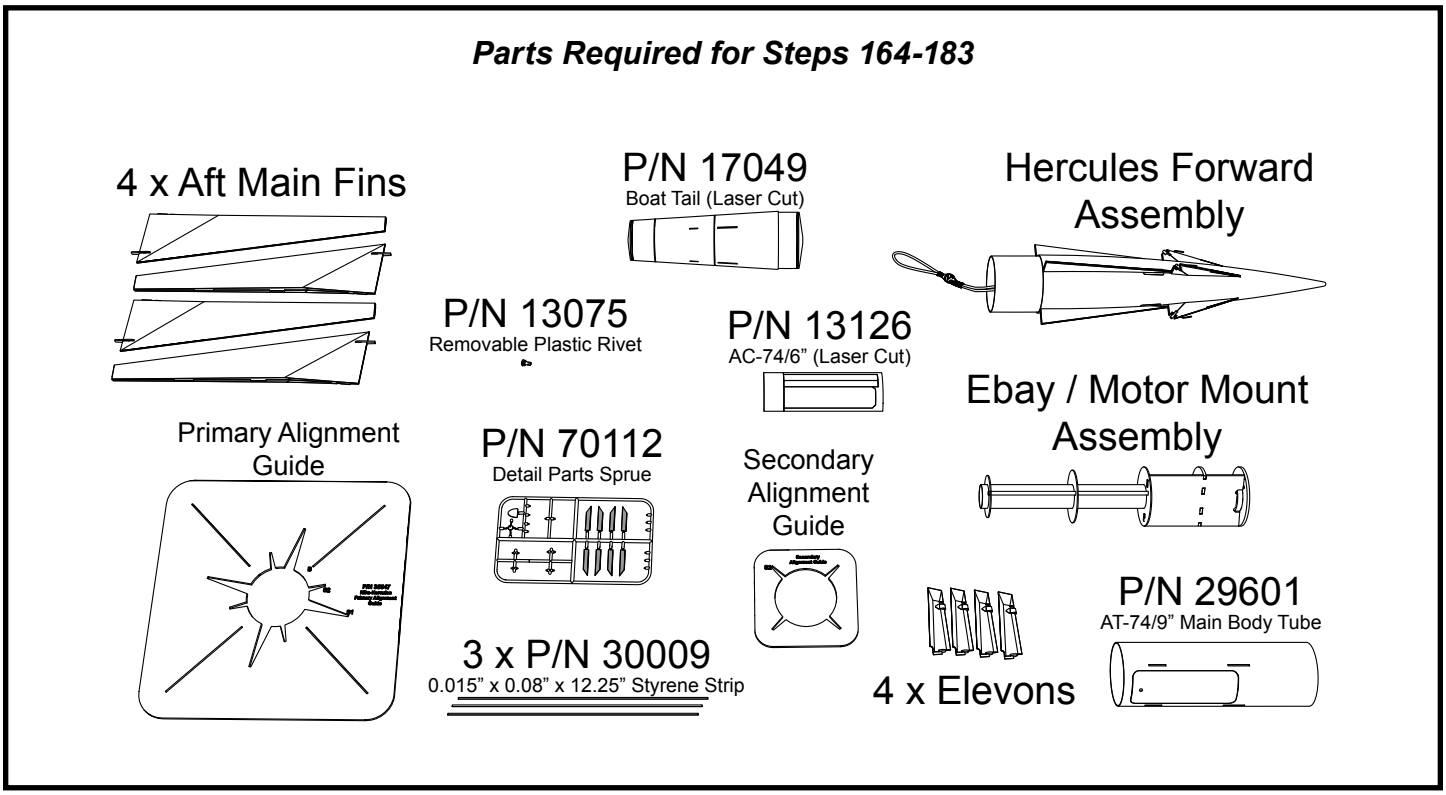

Hercules Missile—Aft Section Assembly

☐ 164. Use a razor saw or hobby knife to cut the boattail at the two grooves – forward and aft.

Note: there are two grooves in the middle which are not used in this kit and should be filled with a modeling filler.

After cutting, the result should be a conical transition with a 1" (25 mm) shoulder on one end, no shoulder on the other, and a total length (shoulder included) of 8-1/2" (216 mm). Sand the ends and surface of the boattail smooth and using medium sandpaper (220 grit).

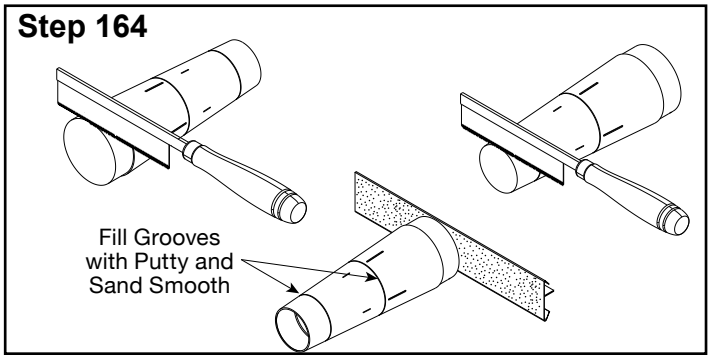

☐ 165. Use a sharp hobby knife to clear any remaining plastic from the slots on the boattail, then sand the surface using fine sandpaper (400 grit) to ensure that the fins sit flush against the rocket.

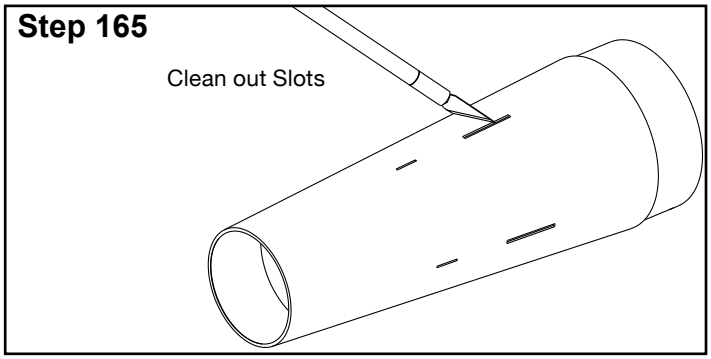

☐ 166. Remove the rectangular piece from one end of the large laser cut coupler (P/N 13126) with a sharp hobby knife, and glue the rectangle inside the shoulder of the boattail using medium CyA adhesive. With the shoulder of the boattail (the wide end) facing away from you, and the cut alignment line facing upward, glue the coupler rectangle inside the upper right quadrant of the shoulder and flush with the edge.

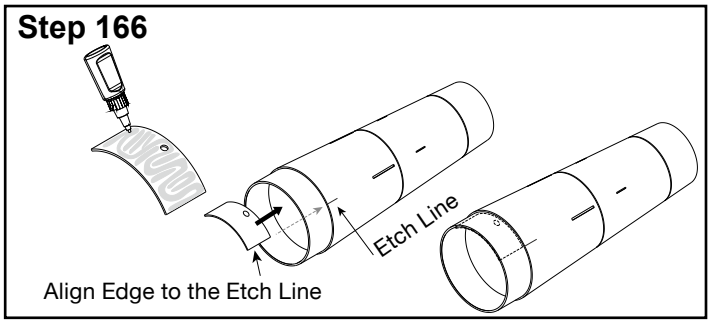

☐ 167. Due to variations in the manufacturing of the boattail, the fit of the motor mount / ebay needs to be adjusted before assembly. **Without glue,** dry fit the motor mount assembly in the boattail, with the notch on the exterior of the aft ebay ring (**CR3**) in line with the cut alignment line in the boattail. Press the motor mount assembly into the boattail, and use a pencil to mark any collisions (particularly on ring **CR5**). Sand down the centering rings (**CR4** and **CR5**) using medium sandpaper (220 grit) or, alternatively, sand the interior of the boattail using a grinding wheel on a rotary tool. Adjust the boattail and centering rings until the motor mount assembly slides all the way into the boattail, and centering ring **CR3** sits flush against the shoulder of the boattail. Do not glue yet.

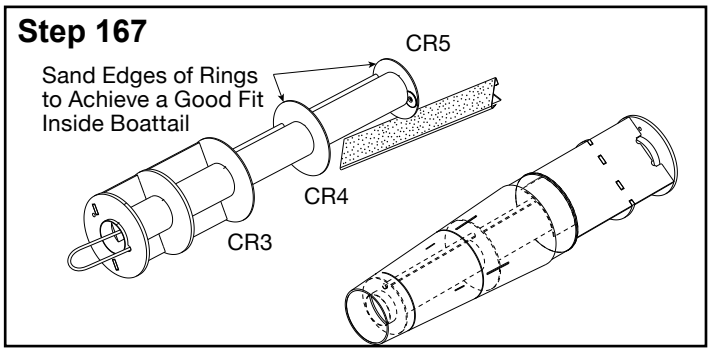

☐ 168. Fill the spiral grooves on the main body tube and sand the surface smooth using fine sandpaper (400 grit).

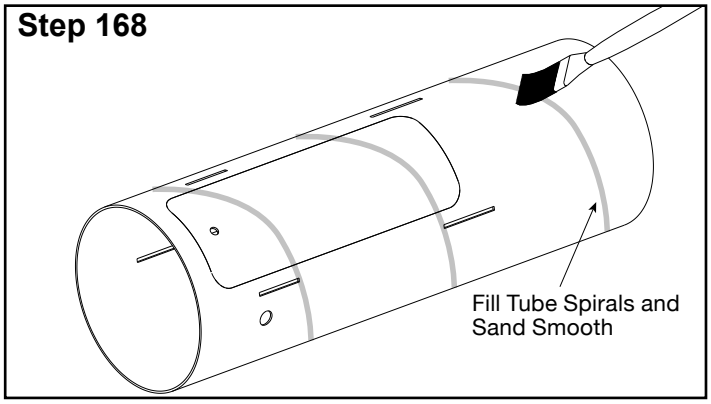

☐ 169. Glue the weld band details onto the main body tube by applying the thin styrene strips in the marked locations. The two weld bands at the front and aft of the tube can be created by simply wrapping the styrene around the tube and trimming it to length. It can then be applied to the body tube with medium CyA. Join each of the radial strips along the engraved alignment lines, then cut the longitudinal strip to length using the already installed radial strips as guides, and glue the final strip in place with medium CyA.

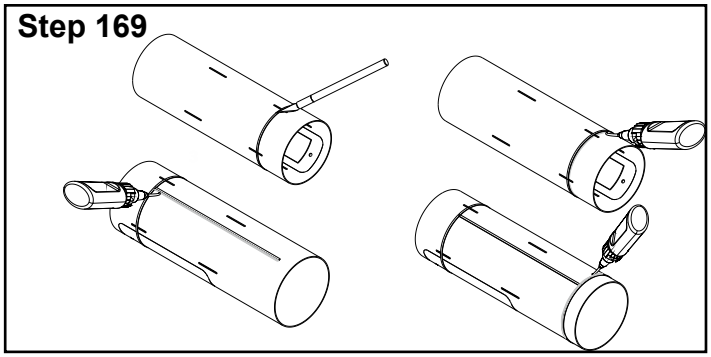

☐ 170. Apply modeling filler to the joint between the radial and longitudinal weld bands. Once dry, sand smooth with fine sandpaper (400 grit).

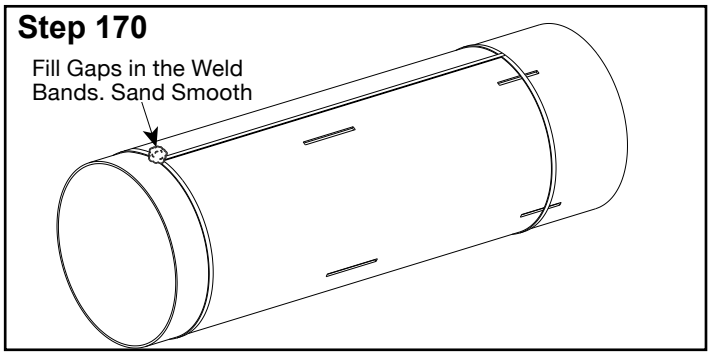

☐ 171. Slide the motor mount assembly into the boattail and use a pencil to mark the location of the aft and middle centering rings. Then, apply 15-minute epoxy at the two marked locations and glue the motor mount into place. Rotate the assembly so that the notch on the outside of the cardstock ring at the aft end of the ebay is in line with the engraved alignment line in the boattail. Press the motor mount back so that the cardstock ring sits flush against the boattail shoulder and – without glue – slide the main body tube into position to hold the motor mount in proper alignment. Allow the adhesive to cure entirely.

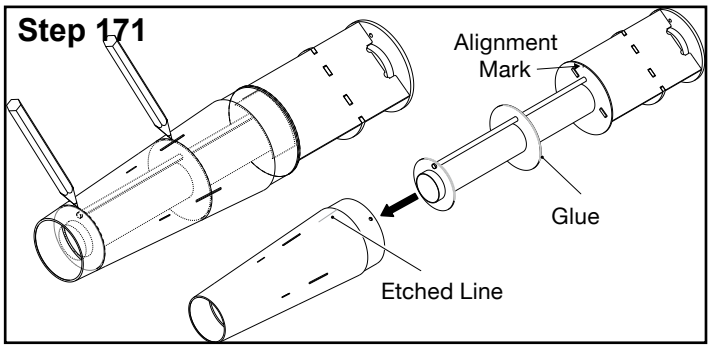

☐ 172. Use a pencil to mark the location of the forward centering ring on the inside of the main tube (access from the forward end of the tube). Then, slide the main tube off of the boattail and motor mount tube. Apply 15-minute epoxy just behind the mark where the forward centering ring will sit as well as around the aft body tube. Take care to avoid getting adhesive in the area around the ebay hatch. Slide the motor mount and boattail into the body tube and rotate the boattail so that the engraved markings on the tube line up with the cut alignment guide on the boattail. Allow the epoxy to cure entirely.

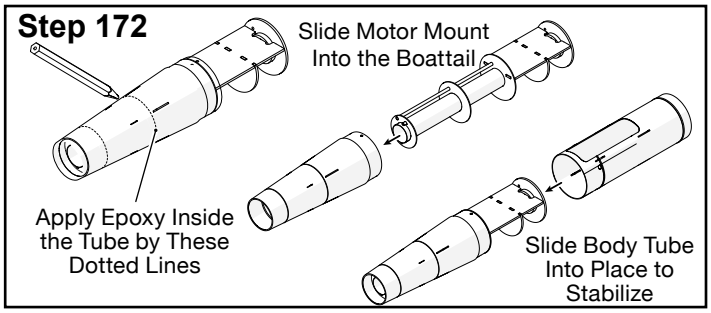

☐ 173. Drill a 5/32” (4 mm) hole through the boattail shoulder using the hole in the ebay hatch as a guide.

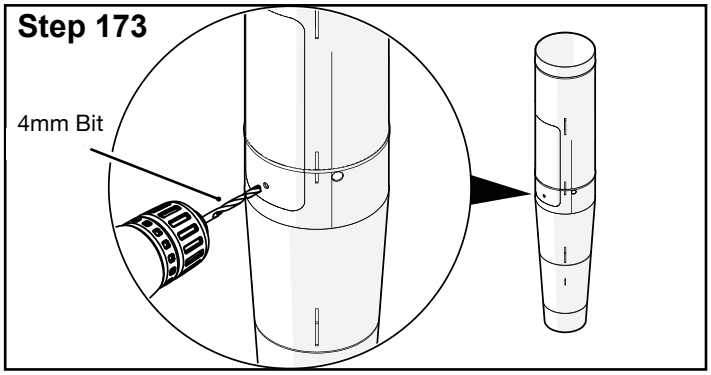

☐ 174. Remove the ebay hatch using a sharp hobby knife. Cut through the weld band details and the tabs, then use fine sandpaper (400 grit) to smooth the remnants of the tabs on the hatch as well as the inside of the ebay opening.

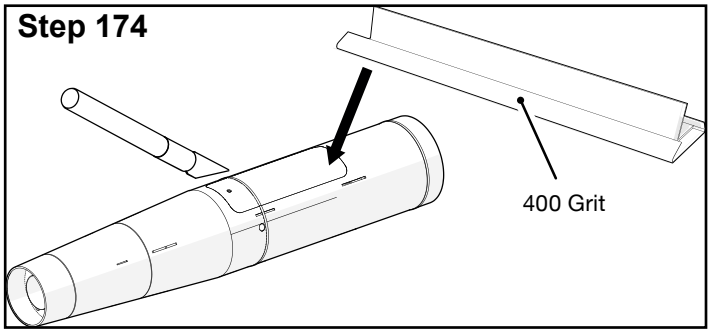

☐ 175. Run a bead of thin CyA adhesive around the joint between the boattail shoulder and the body tube, and a bead of medium CyA between the forward edge of the shoulder and the cardstock centering ring at the aft of the ebay (**CR3**).

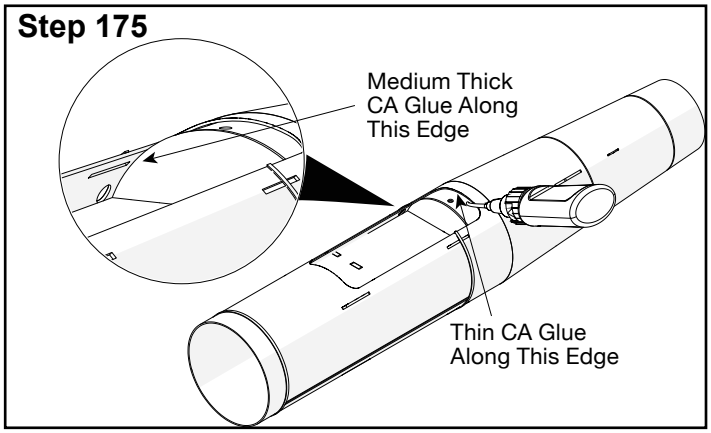

☐ 176. Cut the remaining parts of the large laser cut coupler (P/N 13126) into pieces and use medium CyA adhesive to glue the long hatch support strips (marked with an engraved line down their centers) inside the ebay at either side of the ebay opening. Apply glue to the red surface of the strip and adhere them inside the ebay with the edge of the hatch opening aligned with the engraved center line of the strip. Attach one strip on either side of the ebay.

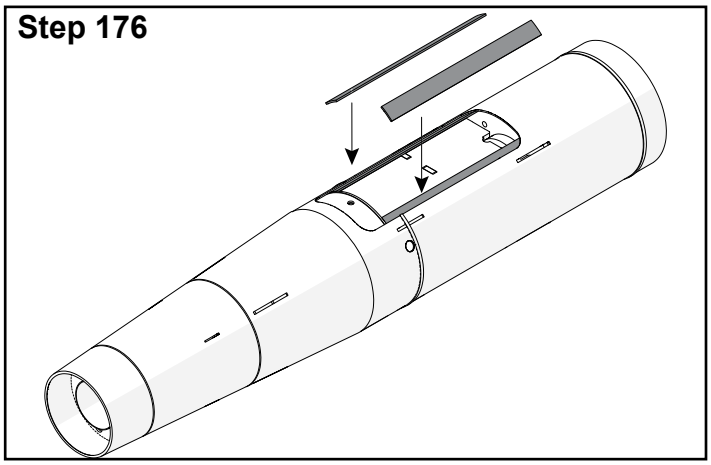

☐ 177. Apply medium CyA adhesive to the large hatch tab, and glue into place on the inside of the ebay hatch, centering it with the two engraved lines on the outer surface of the hatch and aligning the forward edge of the tab to the engraved line on the tab body.

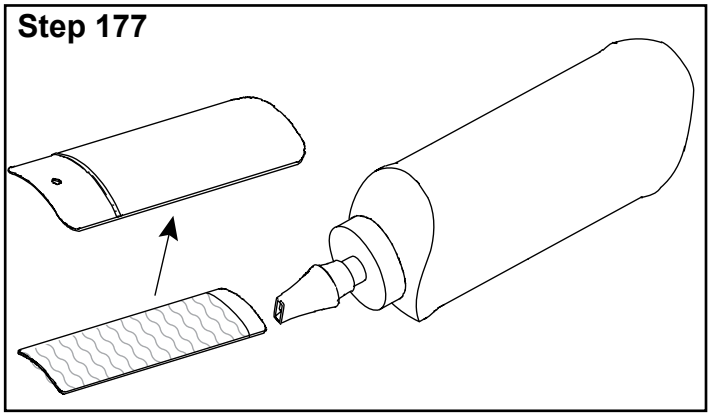

☐ 178. To align the main fins, use the large primary fin alignment guide (specifically the slots marked **S1**) and the secondary alignment guide (for the **S2** alignment). Before attaching them, dry fit the fins to ensure a clean fit, flush with the surface of the main body tube and boatail, with some clearance in the slots. Slide the alignment guides into place with the primary guide at the very aft end of the main body tube and the secondary alignment guide flush with the forward end of the tube. Apply medium CyA adhesive to the root of a fin and slide it into place from the aft end. Press the fin tightly against the body until the adhesive cures enough to hold the fin in place, and repeat with the remaining three fins. Once all four fins are in place, run a small bead of medium CyA adhesive along the raised edges of the fins to reinforce the attachment and allow the adhesive to cure entirely.

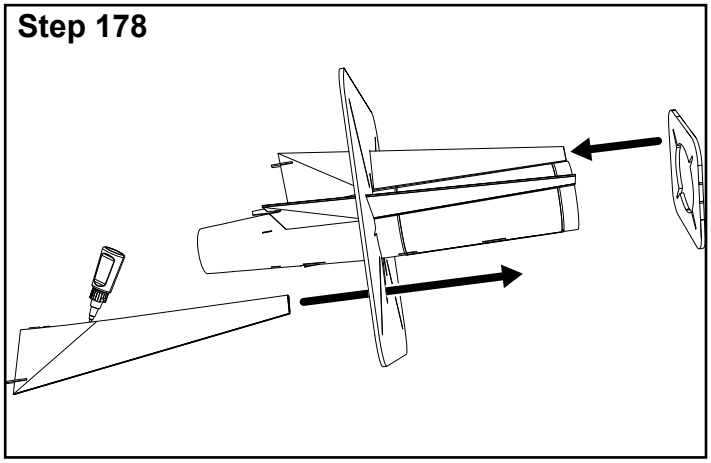

☐ 179. Remove the alignment guides. Apply small (1/8” or 3mm diameter) epoxy fillets at the base of the aft main fins using a filled epoxy. Apply masking tape a small distance (3/32”, 2 mm) from the joint, then apply thickened epoxy to the joint and shape with a small dowel. Once the epoxy has cured to the point of holding its shape, remove the masking tape.

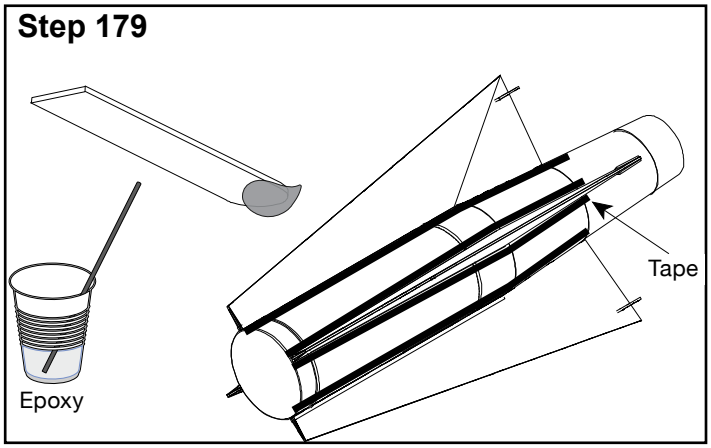

☐ 180. For each completed elevon, apply medium CyA adhesive to the tab at the root and onto the end of the upper hinge, then install the elevon. Take care that the upper hinge bottoms out in the slot on the elevon, and the pivot ring is flush with the surface of the boattail. The upper hinge should contact the plywood core of the elevons.

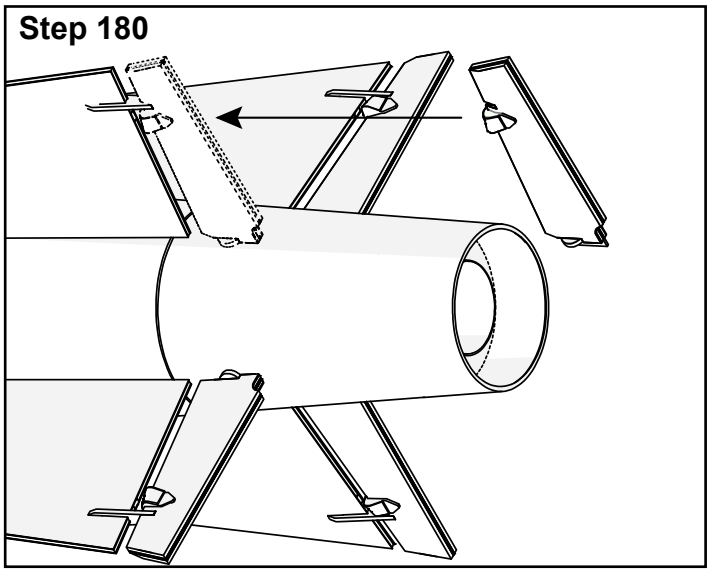

☐ 181. Apply the plastic fairings found in the Detail Parts sprue (P/N 70112) on either side of the main fin. Remove the flanges carefully from the sprue and sand away any remnants of tabs using fine sandpaper (400 grit). Using medium CyA adhesive, glue the flanges to the fins flush with the aft edge and in line with the anti-flutter weights on the elevons.

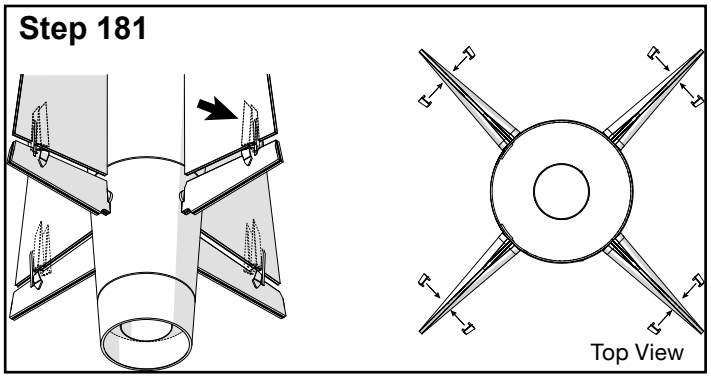

☐ 182. Once the adhesive on the ebay hatch is cured, install the hatch on the rocket by sliding the forward tab under the forward lip, lowering the hatch into place. Secure the hatch in place using the removable plastic rivet.

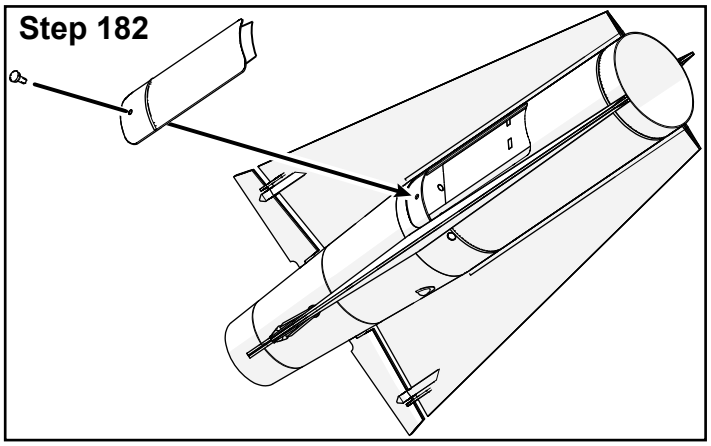

☐ 183. Test fit the forward section of the model onto the assembled aft section to ensure that there are no gaps between the forward and aft sections of the main fins. If there are gaps, cut small pieces of the reserved 1/8” balsa wood, glue them onto the edge of the aft main fins, and sand to match the shape. Additionally, sand to the correct thickness and apply modeling filler as needed to patch the joint.

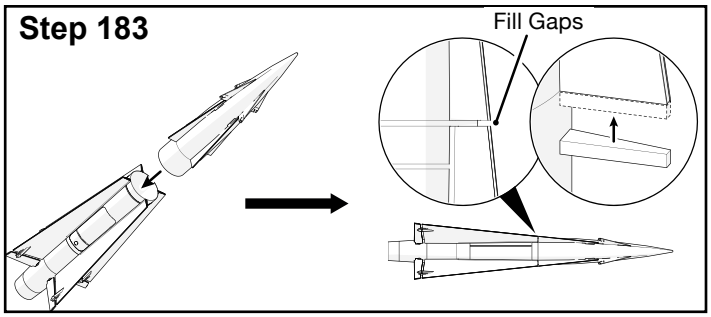

Parts Required for Steps 184-195

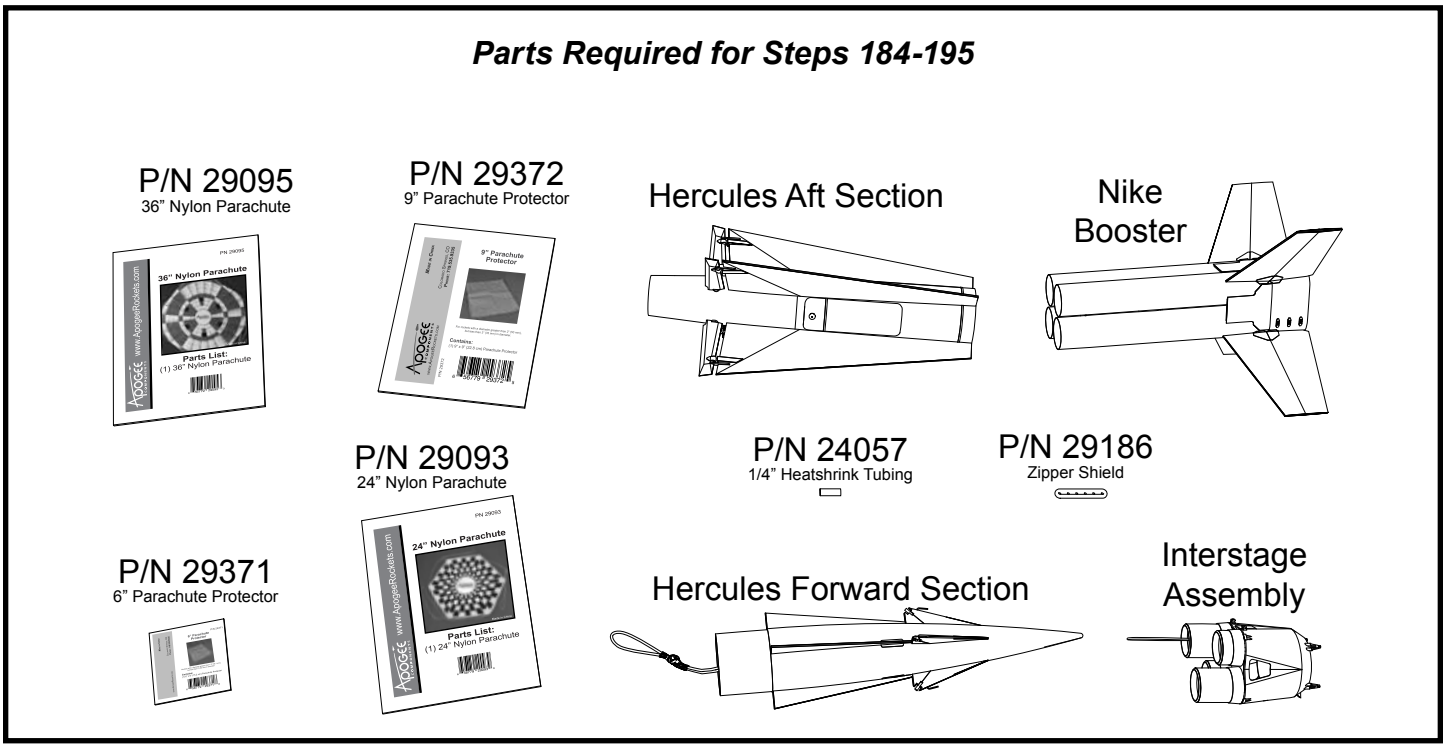

Hercules Missile—Recovery Systems Installation

☐ 184. On the Nike booster, use a dowel to push the shock cord out of the Hercules motor mount and dispose of the paper towel that was used to retain it. Route the shock cord out the forward end of the motor mount tube and then through the slot in the small 6"x6" Parachute Protector (P/N 29371), and push the protector down to the body tube.

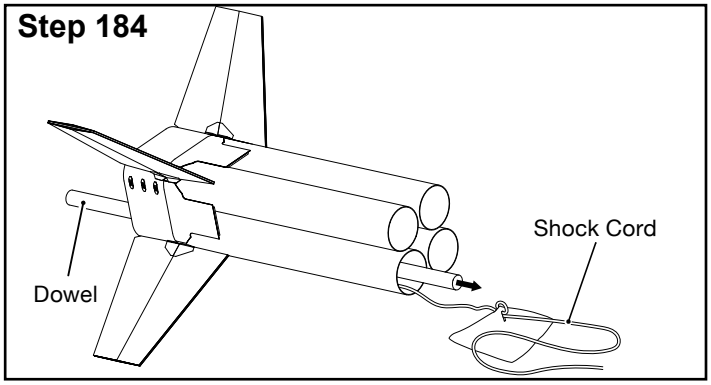

☐ 185. Tie a large loop (approximately 7", 178 mm, long) in the end of the booster shock cord. The loop should be large enough to pass over the interstage comfortably. Cut a 1" section of heat shrink tubing and shrink it over the knot.

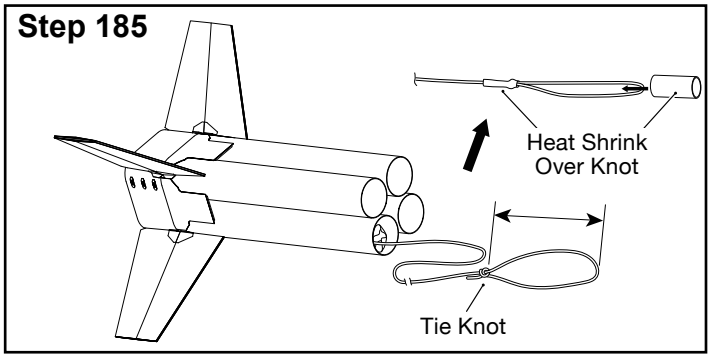

☐ 186. Attach the booster to the interstage by passing the large loop in the shock cord through the small loop in the interstage, passing the interstage through the large loop, and pulling the knot tight again.

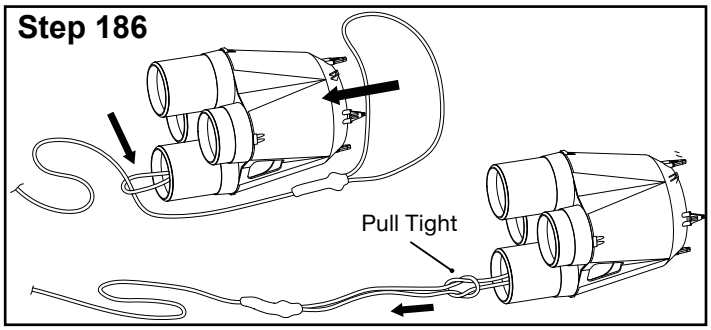

☐ 187. Install the 24” Printed Nylon Parachute (P/N 29093) into the booster by collecting the shroud lines in the middle, passing them through the loop on the interstage, passing the parachute through the loop in the shroud lines, and pulling the knot tight.

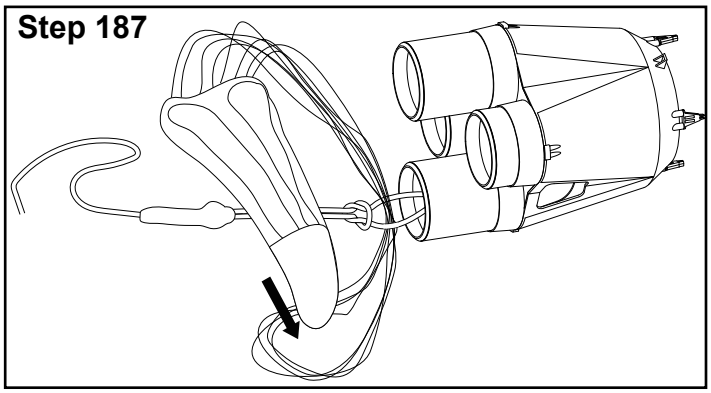

☐ 188. Fold the parachute tightly and wrap it with the shroud lines, wrap that with the parachute protector, insert the shock cord into the body tube, then insert the wrapped parachute. Install the interstage using a rocking motion as necessary to get the couplers to slide into place. **The booster is now ready for finishing (step 196).**

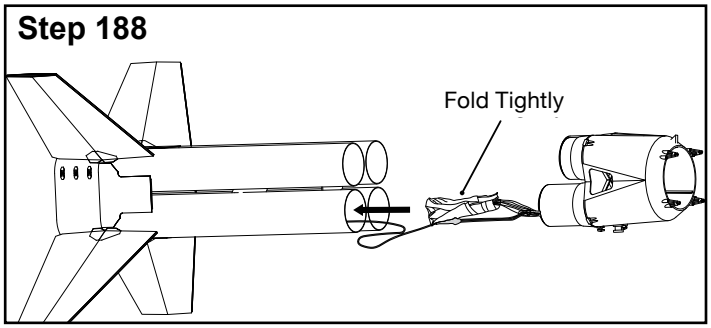

☐ 189. Use thin CyA adhesive to harden the end of the shock cord then, once the adhesive has cured, cut the shock cord at a sharp angle – like a needle.

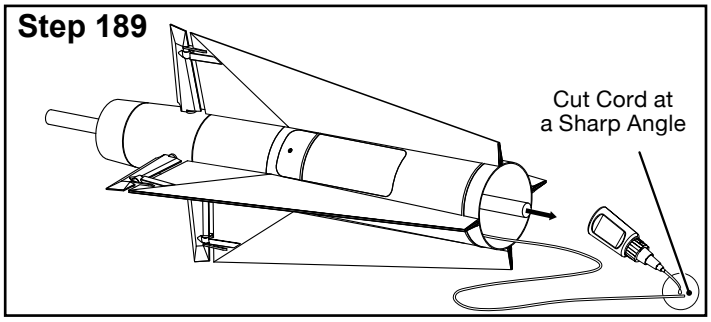

☐ 190. Thread the shock cord through the zipper shield (P/N 29186), beginning at one end of the slot on the top, and continuing to thread alternate holes until the last hole ends up on the same side. Slide the zipper shield down the shock cord so that it will hit the forward edge of the body tube and not the bare shock cord.

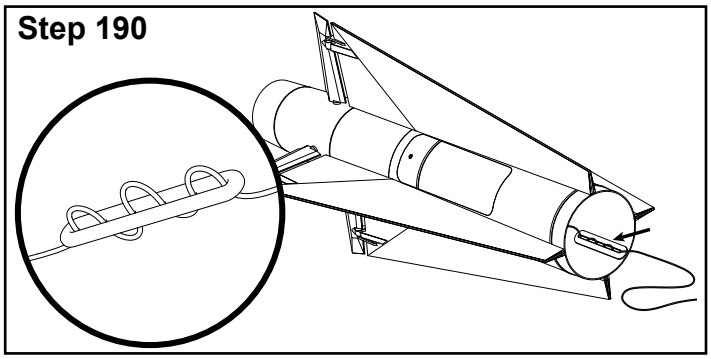

☐ 191. Slide the shock cord through the large 9”x9” Parachute Protector (P/N 29372) and push it down to the body tube.

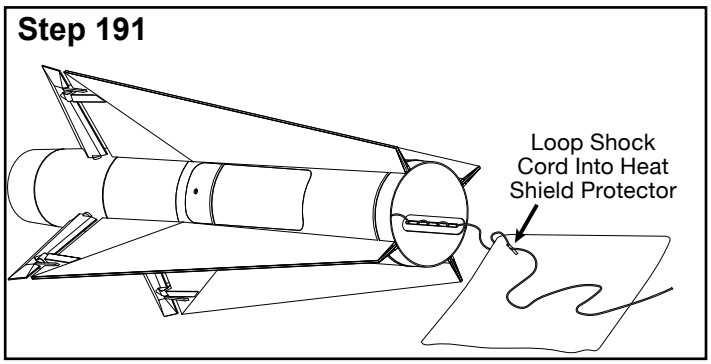

☐ 192. Tie a small loop (1”, 25 mm, long) into the shock cord 36” (915 mm) from the hardened end of the shock cord. To create the loop, fold the shock cord in half, and create a knot with the looped end.

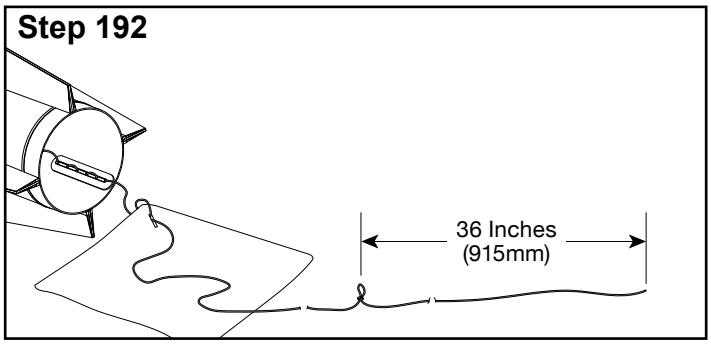

☐ 193. Tie a long loop (7”, 178 mm, long) into the end of the shock cord. Cut a 1” (25 mm) section of heat shrink tubing and shrink it into place around the knot at the base of the loop.

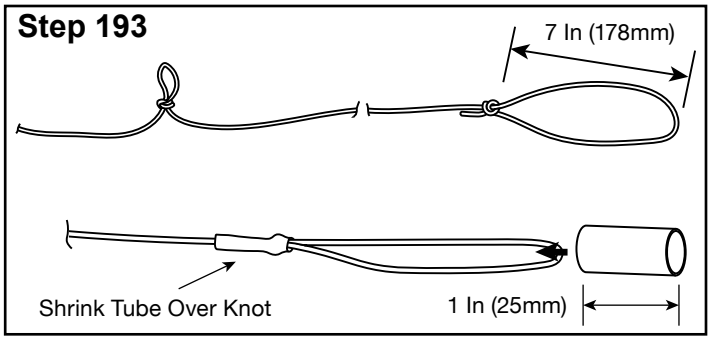

☐ 194. Attach the shock cord to the forward bulkhead loop by passing the large loop in the shock cord through the small loop on the bulkhead harness, routing the large loop over the forward section of the Hercules missile, and pulling the knot tight.

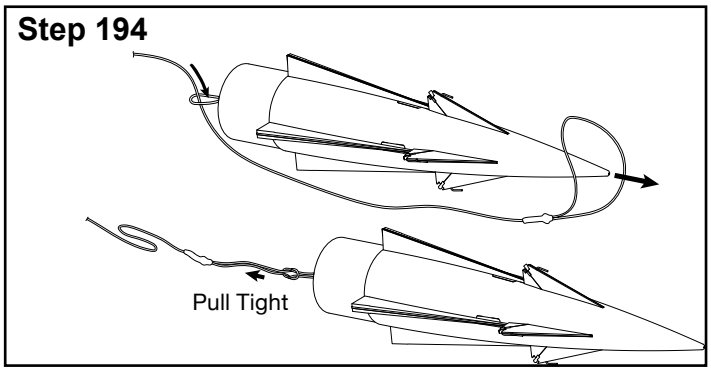

☐ 195. Install the 36” Printed Nylon Parachute (P/N 29095) into the Hercules missile by collecting the shroud lines in the middle, passing them through the small loop on the shock cord (around 36”, 915 mm, from the forward section), passing the parachute through the loop in the shroud lines, and pulling the knot tight.

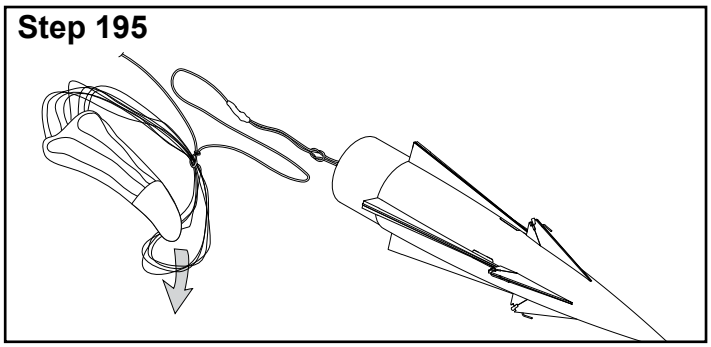

Parts Required for Steps 196-203

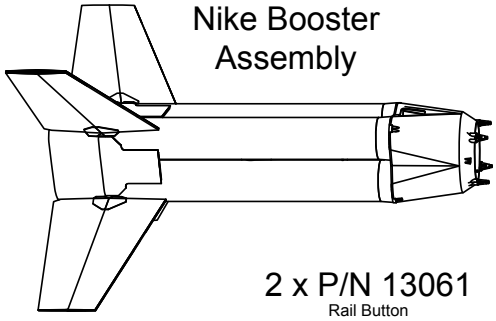

Nike Booster Assembly

2 x P/N 13061
Rail Button

2 x P/N 13065
6-32 x 3/8" Countersunk Screw

P/N 41008
Nike-Hercules Decal Sheet

Booster Spray Paint

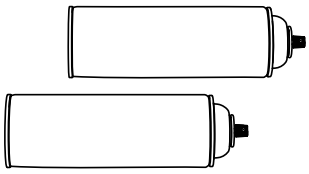

OPTIONAL

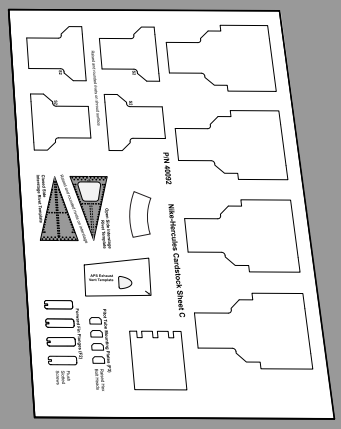

P/N 40092
Cardstock Sheet C

Booster (Nike Cluster) Finishing

☐ 196. Fill any imperfections in the unpainted sections of the booster with a modeling filler. Allow to dry, and lightly sand with fine sandpaper (400 grit).

Step 196

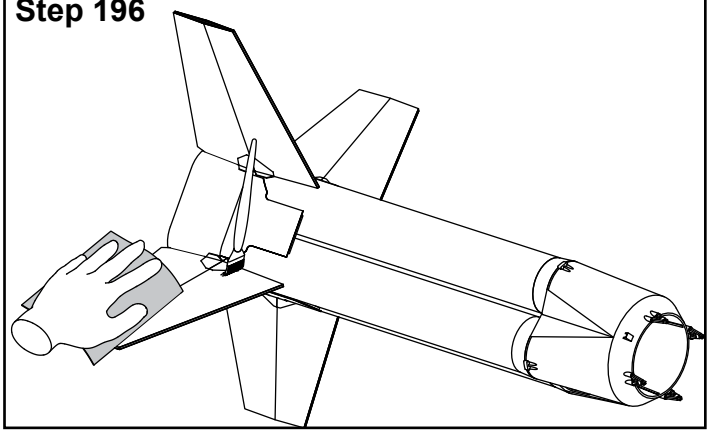

☐ 197. Optional: apply rivet details to the booster using whatever modeling technique is desired (glue rivets, raised rivet decals, etc.). The location of rivets on the fins and shroud are printed directly onto the parts while the locations of the rivets on the interstage are provided as templates which can be found on Cardstock Sheet C (P/N 40092)

Step 197

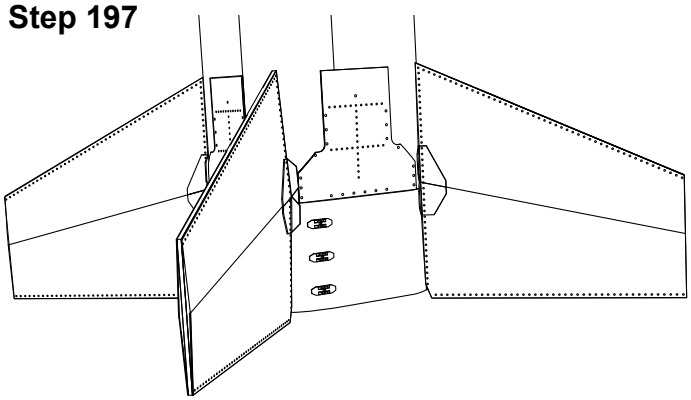

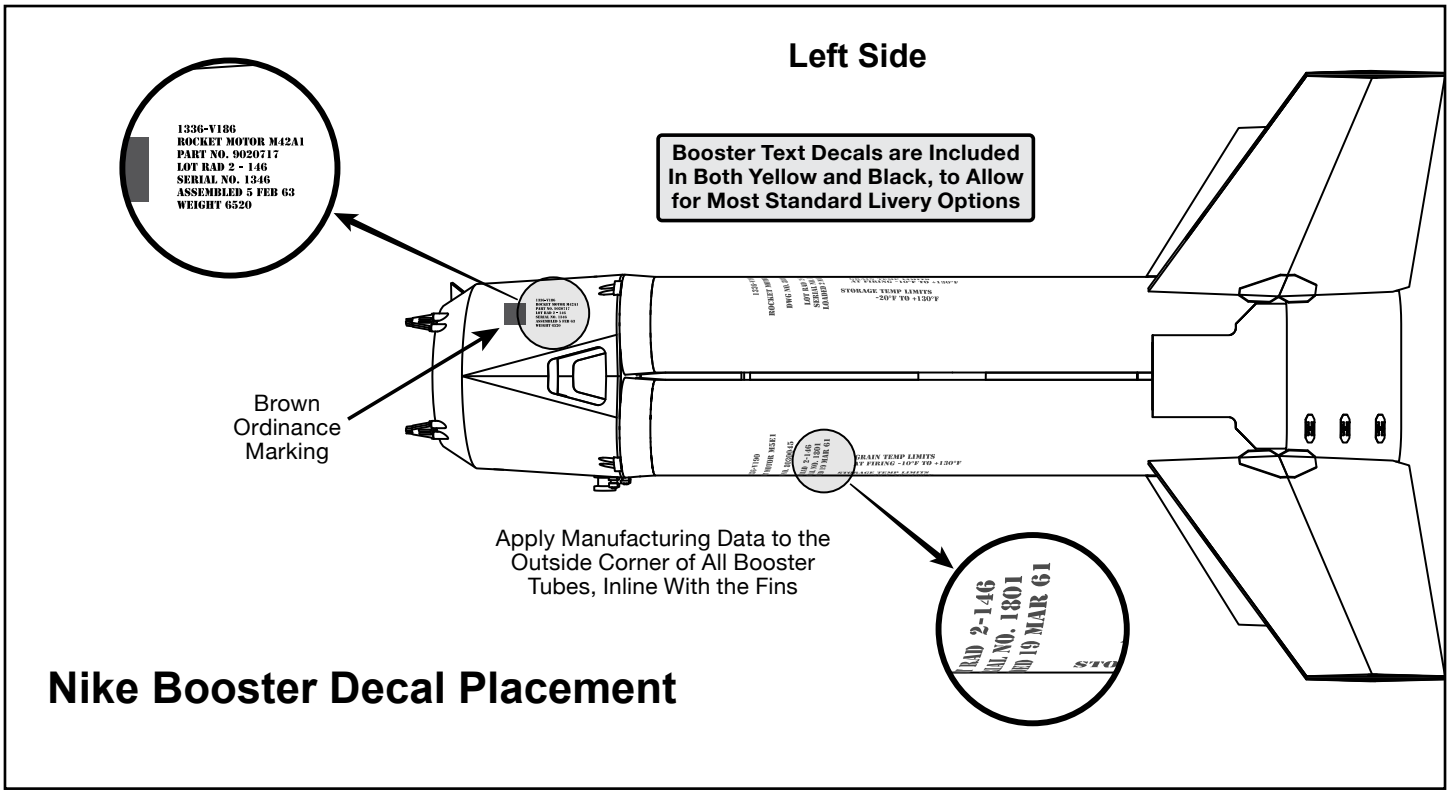

Use this Guide for Placing Booster Decals

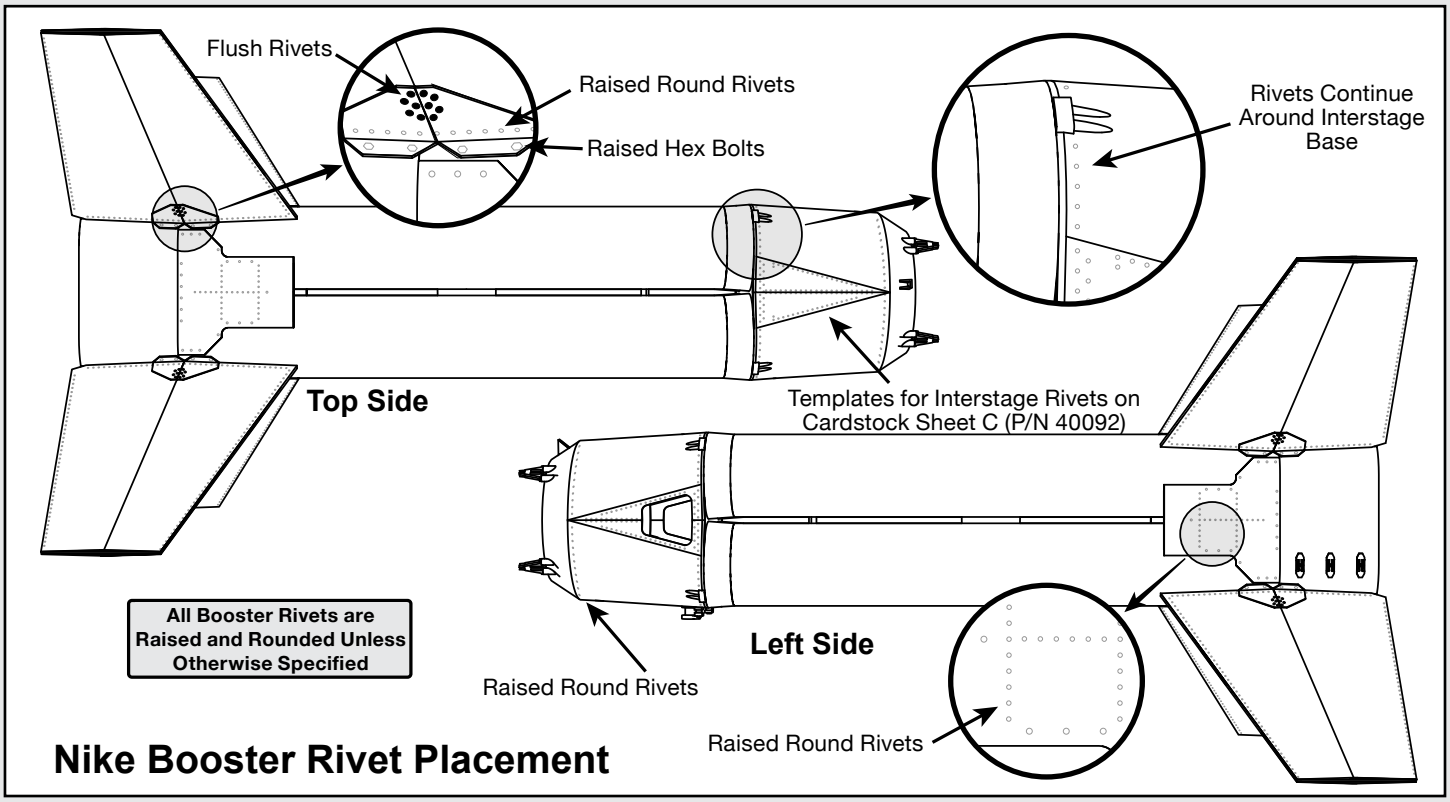

Use this Guide for Placing Booster Rivets

☐ 198. Prime any unpainted portions of the booster, taking care to avoid damaging any rivet details which have been added. Lightly sand the primer between coats with a fine sandpaper (400 grit) and ensure that the final coat is uniform and smooth.

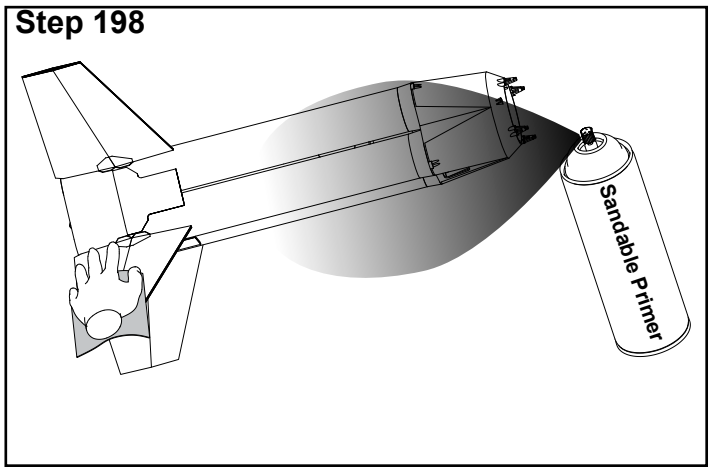

☐ 199. Apply the color coats to the rocket based upon the chosen prototype. The example paint scheme used in these instructions requires masking of the interstage as well as the fins and shroud for application of white paint, assuming that the olive drab paint was already applied earlier during construction. Alternative livery may require a different masking and painting process.

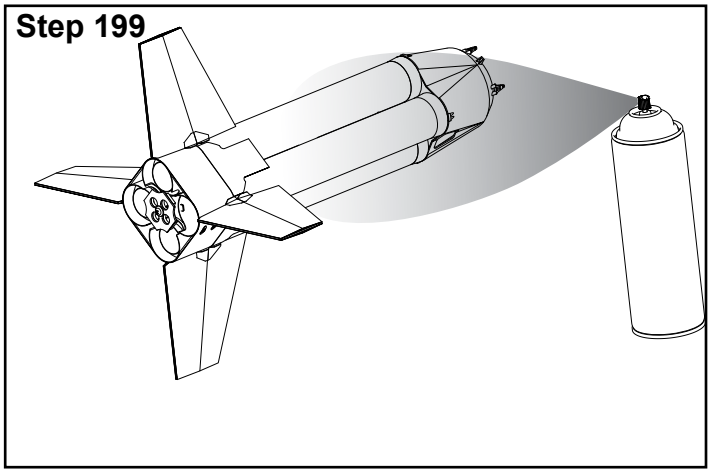

☐ 200. Apply the water-slide decals to the booster using the decal placement diagram on page 57 as a guide. Cut the decals out, leaving a minimal amount of area around the design. Soak in warm water for 15 seconds then remove from the water. Squeegee off excess water, and let the decal sit on a paper towel for an additional 15 seconds. Slide the decal off of the paper backing and place it on the rocket. Once positioned properly, smooth it down with a soft brush or paper towel to force excess water out from behind the decal. Allow the decals to dry entirely before continuing with finishing.

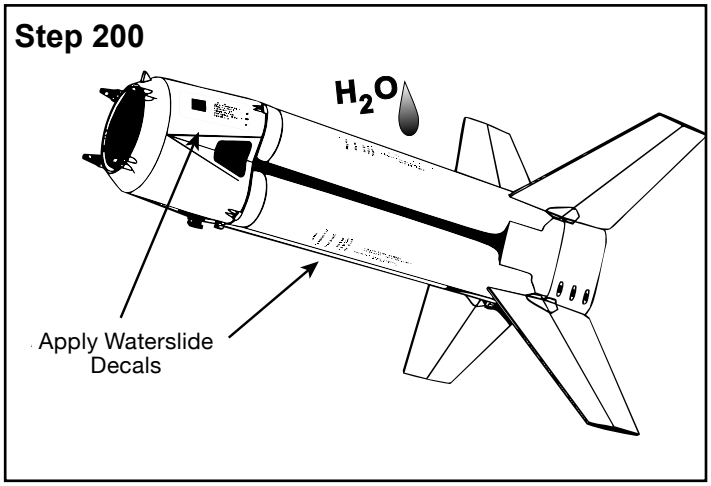

☐ 201. Optional: If desired, additional weathering can now be added to the surface of the rocket using standard scale modeling techniques.

☐ 202. Optional: Apply clear coat over the decals to protect them. If using the paint scheme chosen for these instructions, apply a satin or gloss clear coat over white areas and a flat clear coat over the olive drab.

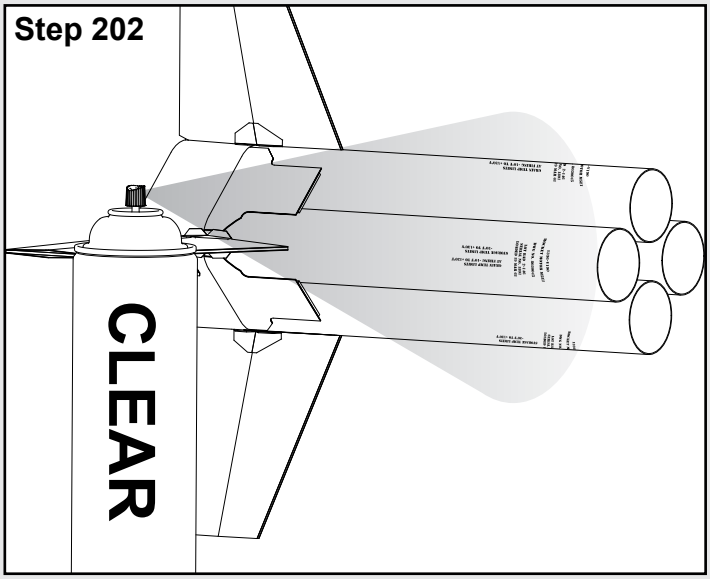

☐ 203. Mount the rail buttons on the weld nuts with the 6-32 screws.

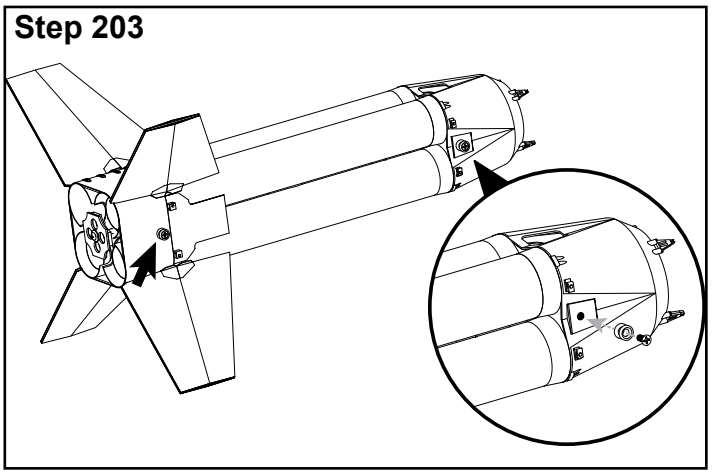

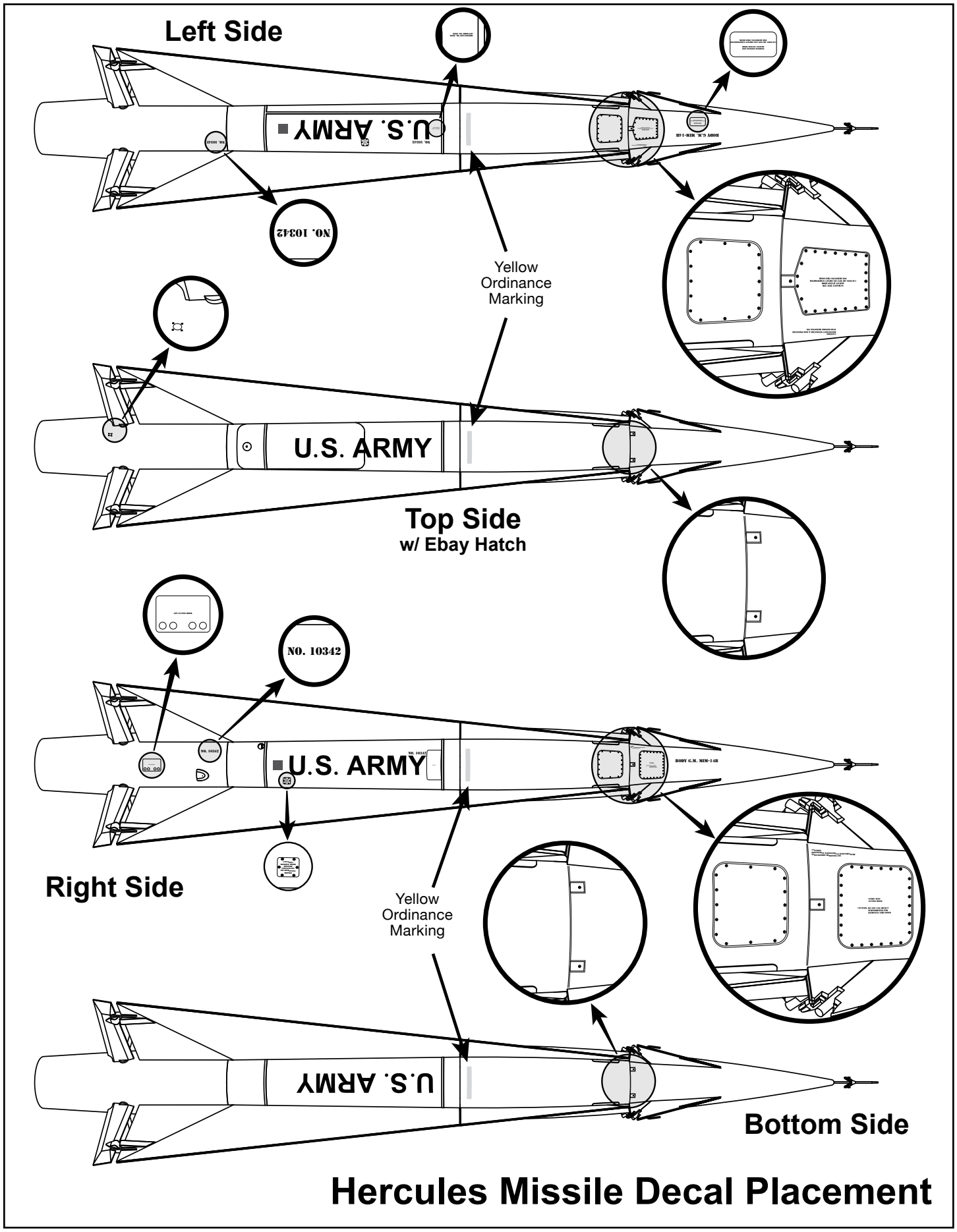

Hercules Missile Decal Placement

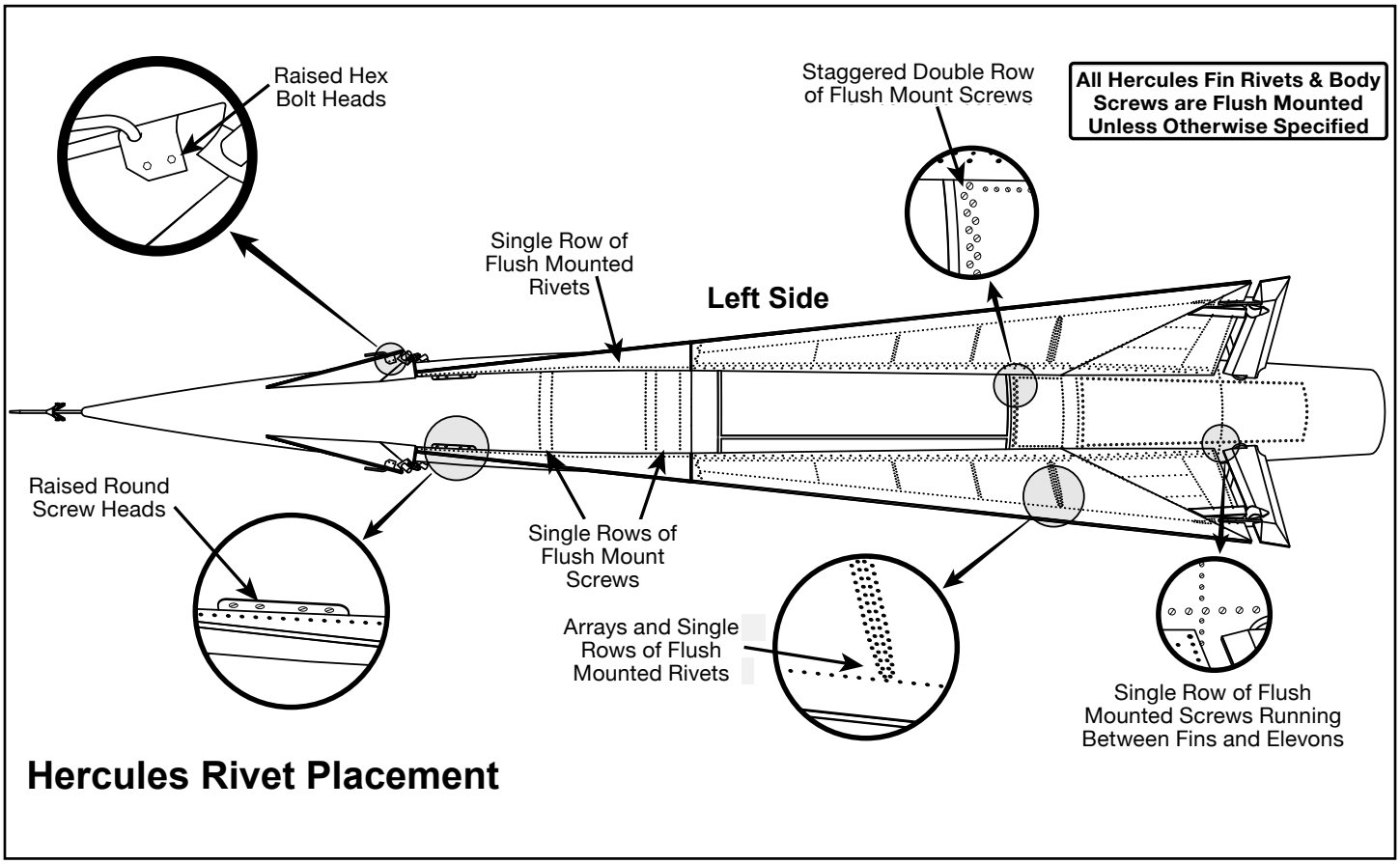

Hercules Rivet Placement

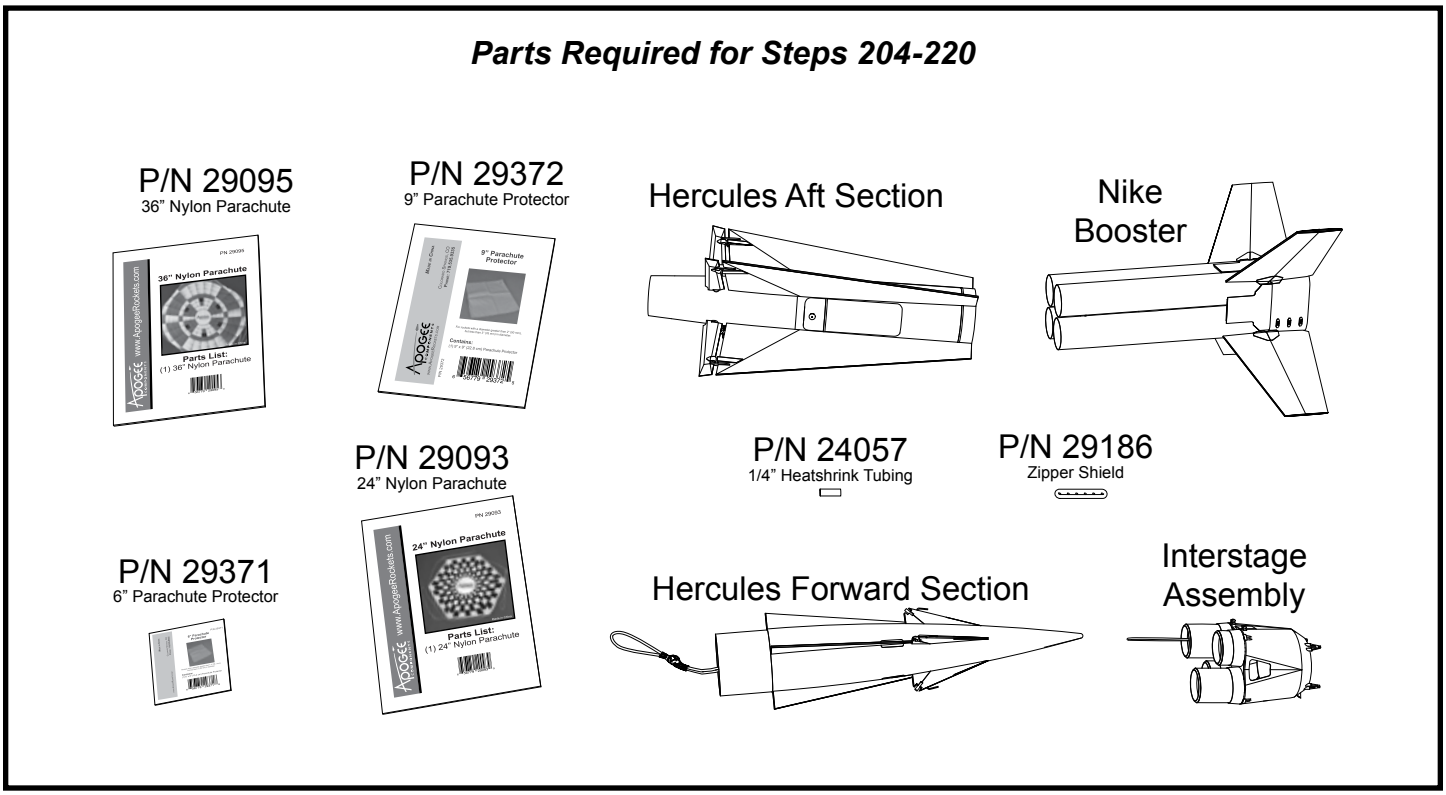

Hercules Missile—Finishing

Hercules Missile—Finishing

☐ 204. Remove the plastic APU Vent detail from the Detail Parts sprue (P/N 70112), then cut the APU Vent Alignment Guide out of the Cardstock Sheet C and place it along the root of the fin, with the arrow pointing to the intersection of the boattail and main body tube. The APU Vent should be placed on the same side as the switch access hole. Glue the vent detail into place using medium CyA adhesive and allow it to cure entirely before continuing.

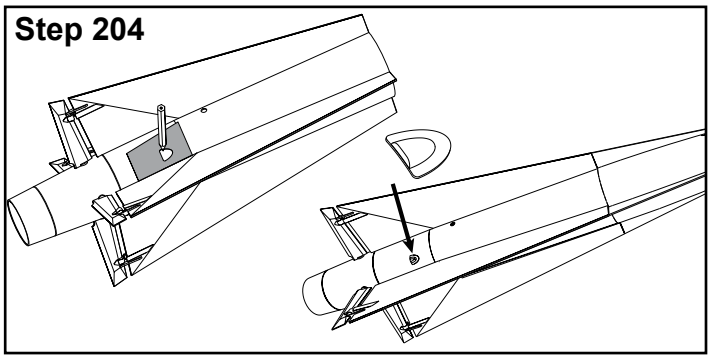

☐ 205. Fill any imperfections in the rocket with a modeling filler. Allow these to dry and lightly sand the entire rocket with fine sandpaper (400 grit).

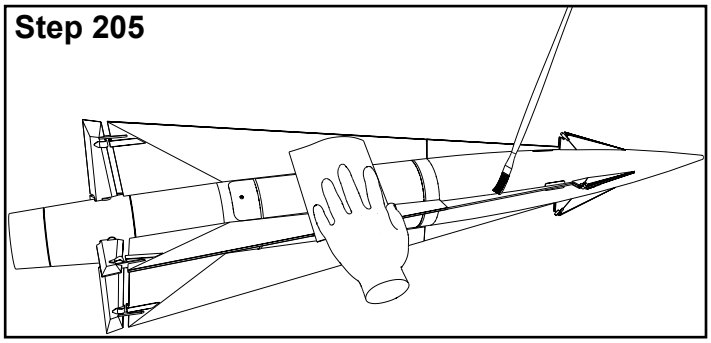

☐ 206. Optional: Apply rivet details to the booster using whatever modeling technique is desired (glue rivets, raised rivet decals, etc.). The location of rivets on the main fins are printed directly onto the facings. Additional rivet locations are marked in the 3-view drawings found on page 61.

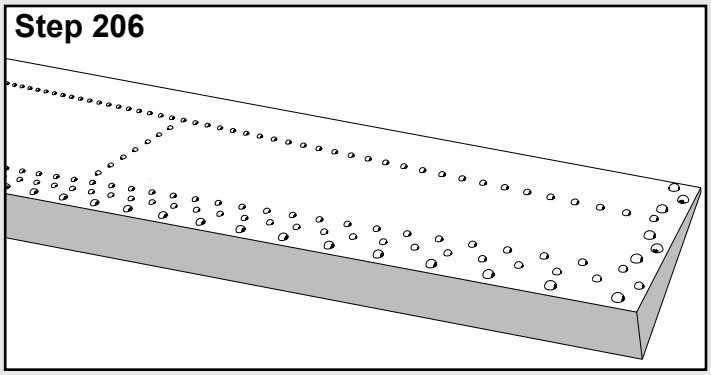

☐ 207. Prime the Hercules. Lightly sand the primer between coats with a fine sandpaper (400 grit), taking care to avoid rivet details, and ensure that the final coat is uniform and smooth.

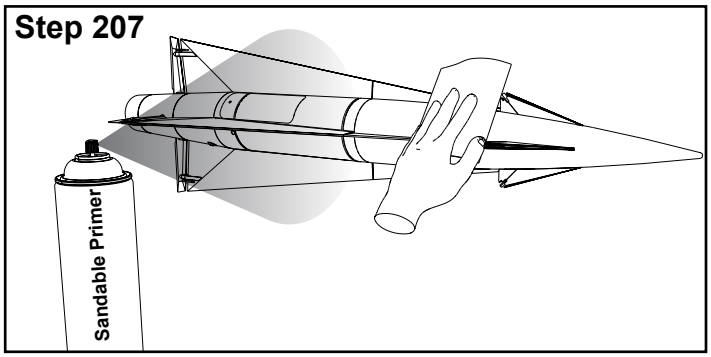

☐ 208. Most prototypes of the Hercules missile are painted a single color, so application of the base coat of paint is simple. Once the primer is smoothly applied, simply apply a couple of thin coats of the base color (white, in the case of the prototype chosen for this instruction booklet) and allow to dry.

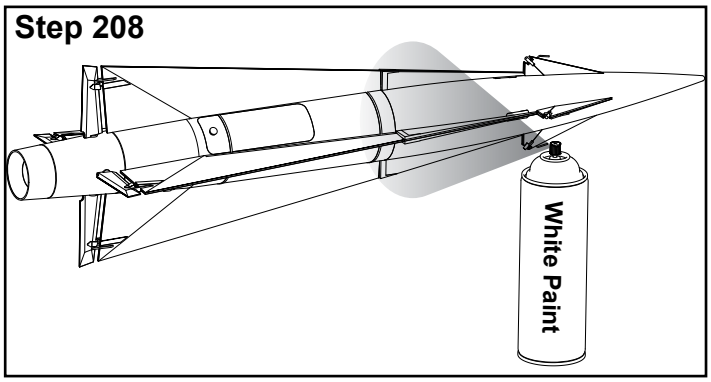

☐ 209. Additional detail paint can be applied once the base paint has dried completely. The prototype chosen for these instructions has an aluminum tip on the nose and red caps on the antennas (on the destabilizers). The aluminum tip is easily painted by simply masking all but the tip of the forward section, and spraying a couple of light coats, while the antennas are most easily painted by hand with a brush.

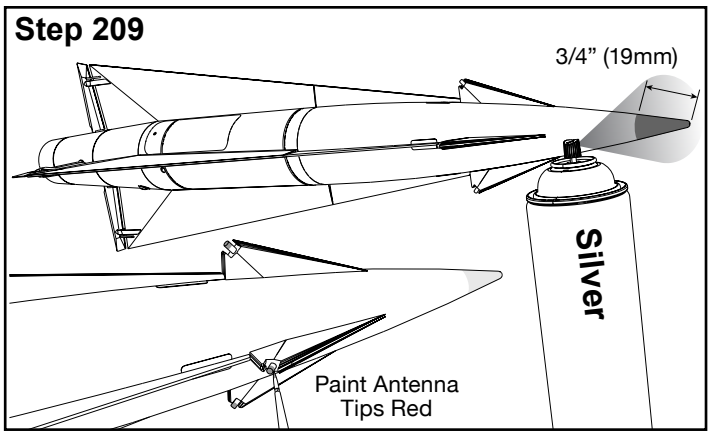

☐ 210. The pitot tubes on the destabilizers are created out of brass wire. Cut four 1-7/16" (37 mm) lengths of wire from the included length and bend into shape using the template as a guide.

- Pitot Tube Bending Guidelines

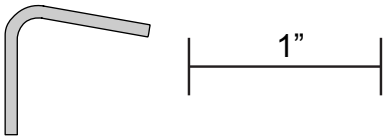

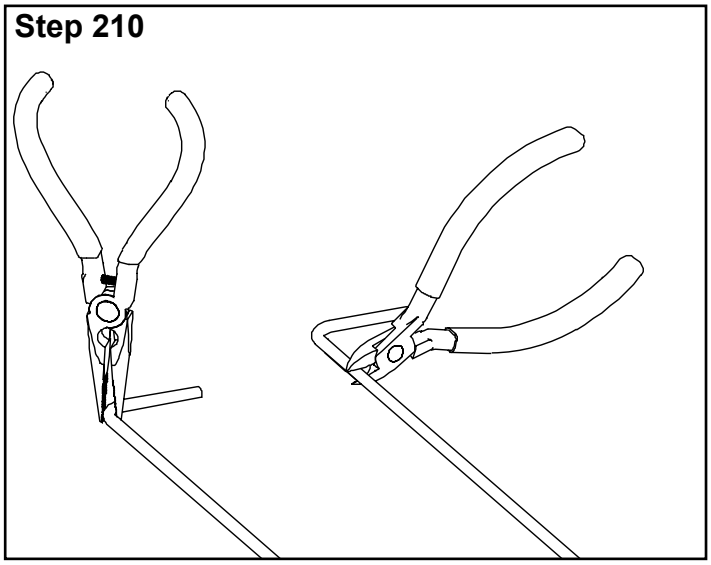

☐ 211. Sand the surface and ends of the pitot tubes using fine sandpaper (400 grit), then clean well using acetone to remove any grease or oil and paint with aluminum paint. Allow these to dry entirely, then install the pitot tubes into the destabilizers by pressing them into place through the holes in the cardstock plates. Secure them with a drop of thin CyA adhesive.

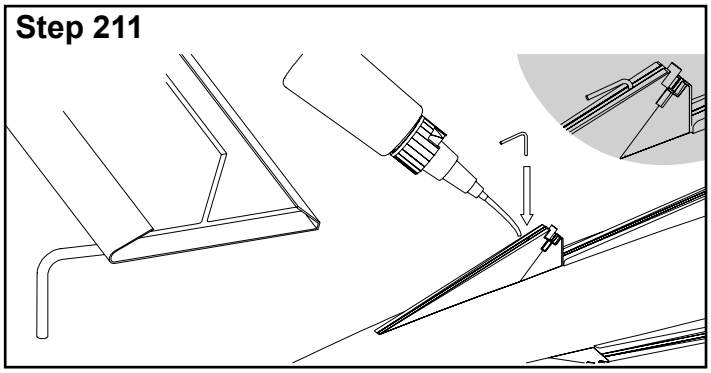

☐ 212. Cut a length of brass wire 2” (51 mm) long to use as the multi-axis pitot static tube spike. Sand it with fine sandpaper (400 grit) and clean with acetone to remove any grease or oils.

Pitot Spike Cut Guide

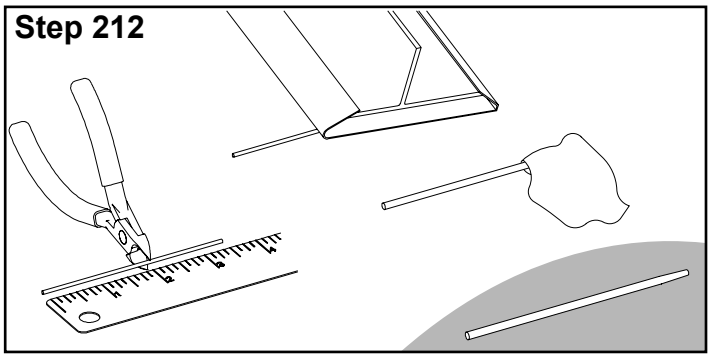

☐ 213. Remove the plastic multi-axis pitot-static detail from the Detail Parts sprue (P/N 70112). Using medium CyA adhesive, glue it onto the 2” long length of wire, 1” (25 mm) from the bottom.

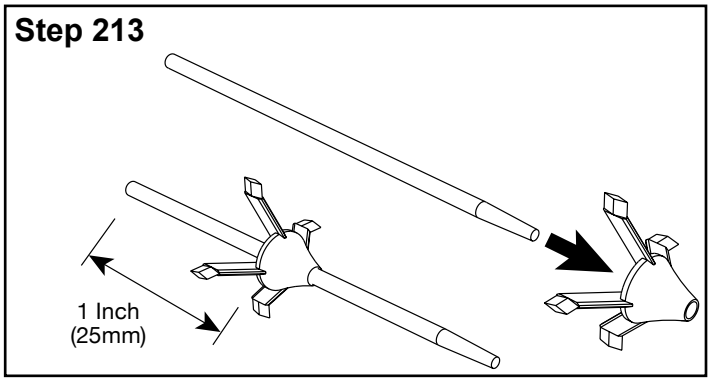

☐ 214. Paint the multi-axis pitot-static tube assembly in aluminum paint and set the assembly aside for display.

Note: this detail is not intended for flight and sits in the 1/16” diameter hole on the nose cone for static display.

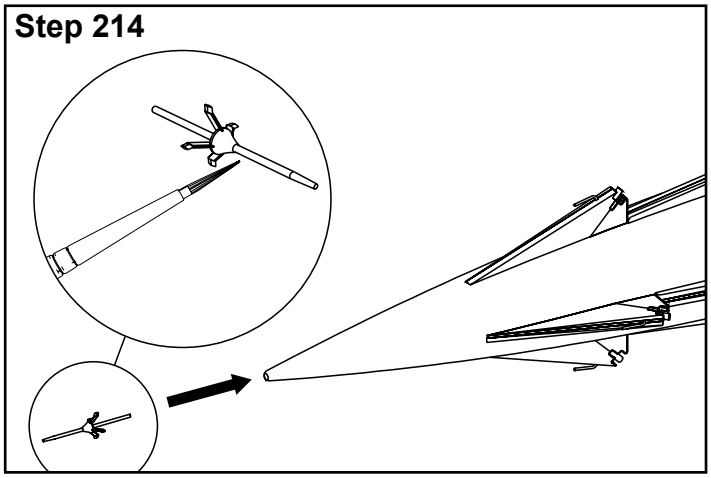

☐ 215. Apply the water-slide decals using the decal placement diagram on Page 61 as a guide. As there are a large number of decals on the Hercules missile, care should be taken to avoid rewetting previously placed decals to avoid them slipping or being damaged. Allow the decals to dry entirely before continuing with finishing.

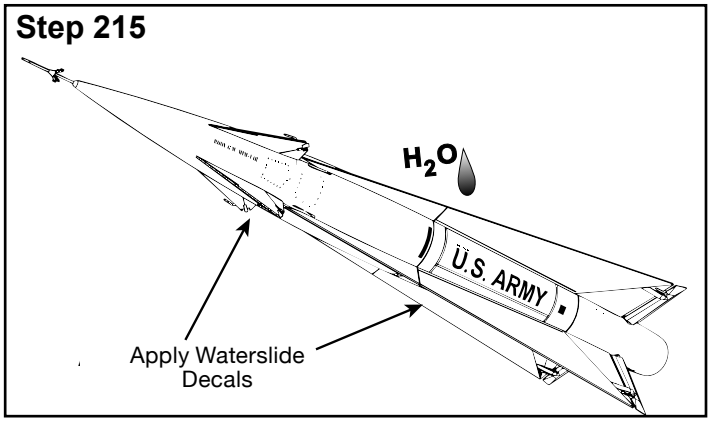

☐ 216. Optional: If desired, additional weathering can now be added to the surface of the rocket using standard scale modeling techniques.

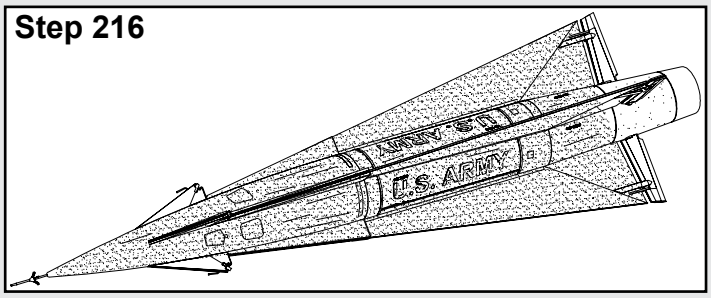

☐ 217. Optional: Apply clear coat to the Hercules booster. An olive drab paint (as is used on some prototypes) should be covered in a flat clear coat while other colors should be painted with a satin or gloss clear coat.

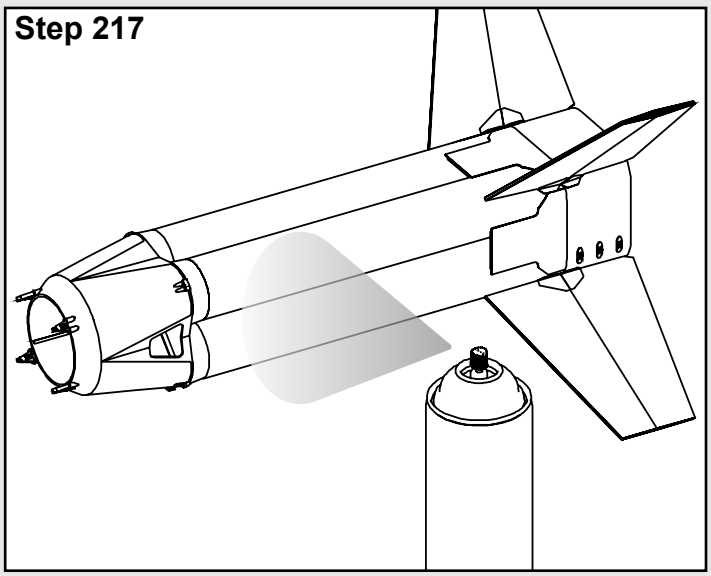

☐ 218. Once all finishing steps are completed and fully dried. Remove the ebay hatch for installation of the electronics. Use a drop of thick CyA adhesive to mount the simple switch at the far aft of the ebay so that its plunger is accessible from the access hole on the side of the Hercules missile.

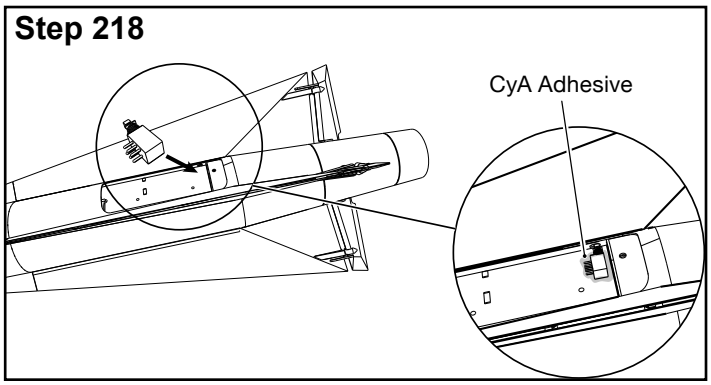

☐ 219. Install the chosen staging electronics as per the manufacturer's recommendations. To ensure that the modeler is provided with all the components they might need, Apogee provides the Electronics Mounting Kit. These parts are also available separately if desired.

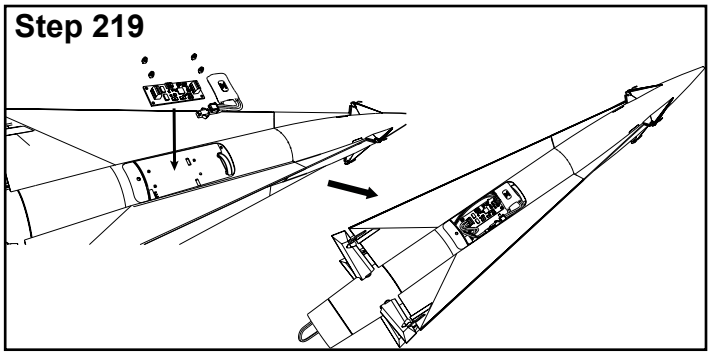

☐ 220. Congratulations! Your Nike-Hercules is complete and ready for flight, or to stun workshop guests!

NIKE HERCULES

Launch Supplies Needed

To launch your rocket, you will need:

• A launch pad with a 1 inch rail, and a launch controller that can handle the selected igniters

• Engines such as those recommended in the motor chart.

Additional motors can be viewed here:

Rocket Preflight (Nike Booster)

When flying the Nike-Hercules with a full cluster of four motors, it is suggested that the two motors in the recovery tubes have an ejection charge that happens before the passive tubes or that the motors in the passive tubes are simply plugged as the passive tubes do not function as a way to trigger the recovery system as efficiently.

☐ I. Install the two recovery motors diagonal from one another in the joined booster tubes (with the recovery system and long couplers). If Estes motors are used, create tape thrust rings.

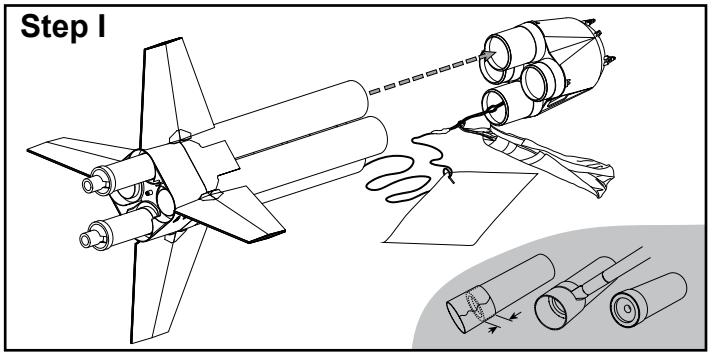

☐ II. Optional: Install the two additional motors in the remaining booster tubes (with the short couplers). If these motors are installed, they should either be plugged or their ejection delays extended beyond the recovery motors. Again, Estes motors will require thrust rings to be added.

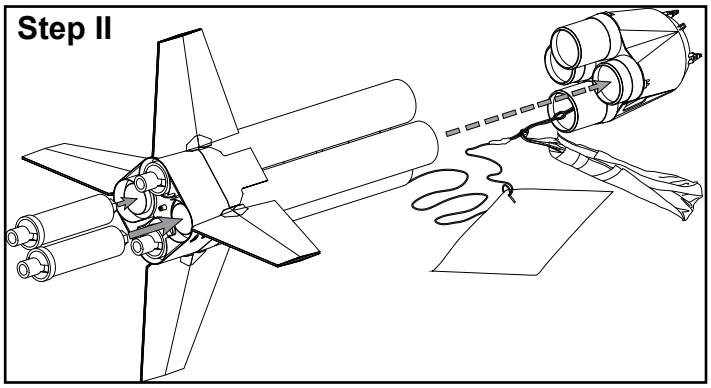

☐ III. Install the motor retainer to hold the motors by placing the retainer with the 1/8” plywood stiffener facing forward between the motors. Tighten the retaining screw against the retainer with a washer under the screw head to spread the force.

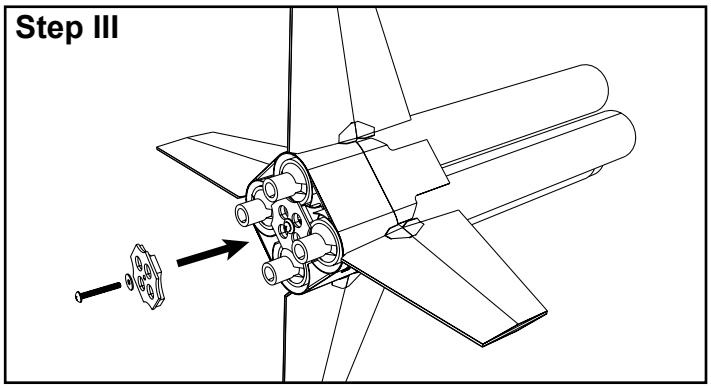

☐ IV. Install the booster recovery system. Z-fold the shock cord and insert into the tube. Then, fold the parachute tightly, wrap with the shroud lines, wrap with the parachute protector, and insert the package into the tube. Install interstage, using a rocking motion as necessary to slide all four couplers all the way into the booster tubes.

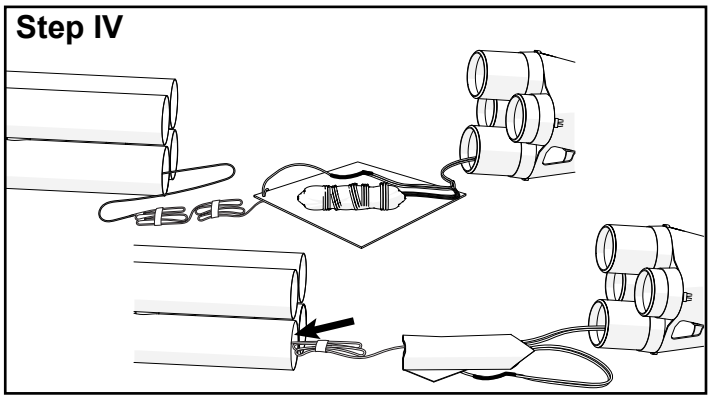

☐ V. Strip each of the igniter wires down 3” from the end and install the igniters into each of the booster motors and secure them into place. For e-matches in black powder motors, a reliable method of retention is to press a small ball of wadding into the nozzle next to the initiator and then to apply tape across the back of the engine. For standard igniters in composite motors, the standard retention (either caps or rubber bands) are generally quite reliable.

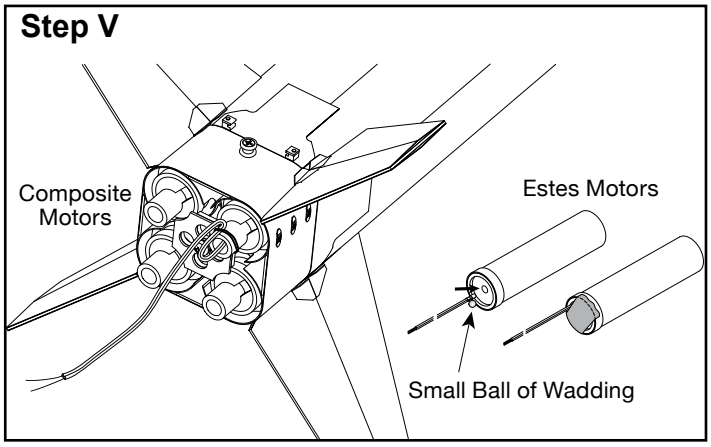

☐ VI. Tape the igniters together near the center of the motors to ensure they do not fall out prior to ignition, then twist the stripped igniters together to provide a simple attachment at the launch pad. The igniters should be connected in parallel to maximize the probability of all the motors lighting.

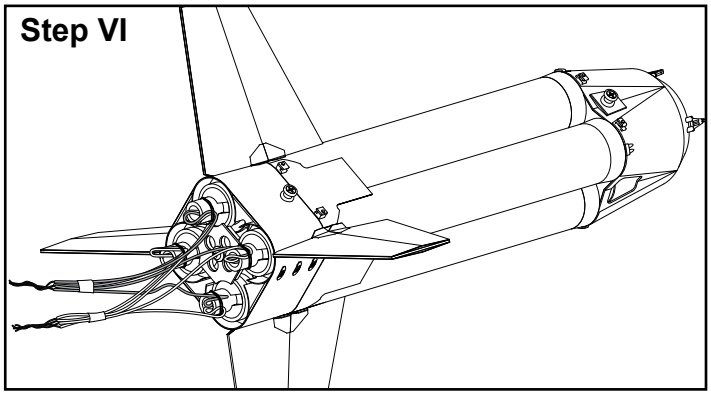

☐ VII. Apply baby powder to the interior of the interstage to minimize friction during separation.

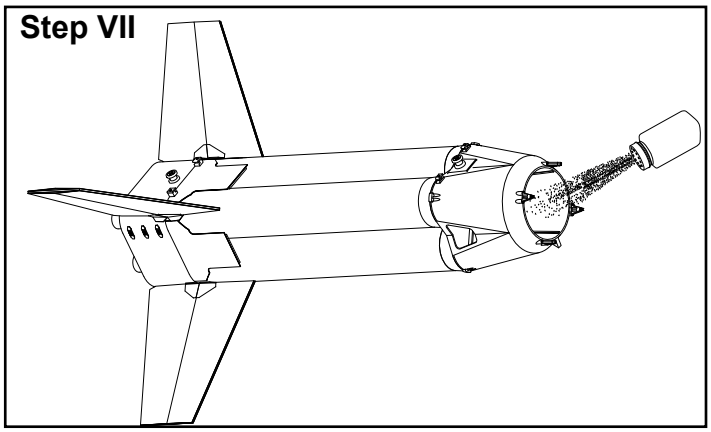

Rocket Preflight (Hercules Missile)

☐ VIII. Remove the multi-axis pitot-static probe from the front of the rocket and set aside. The probe is not durable enough to reliably survive flight and – as such – should be left off.

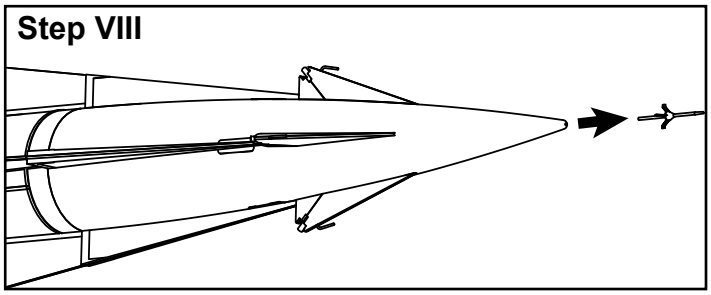

☐ IX. Open the ebay by removing the hatch and check functionality of the staging electronics by powering them up and checking for expected functionality (as per manufacturer's instructions). Power down the electronics.

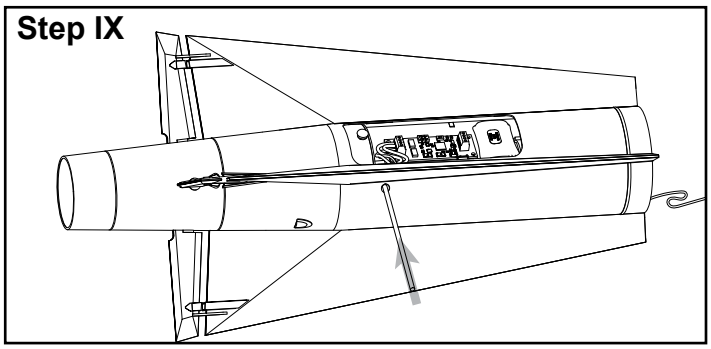

☐ X. Install the sustainer motor and retain using the screw and washer.

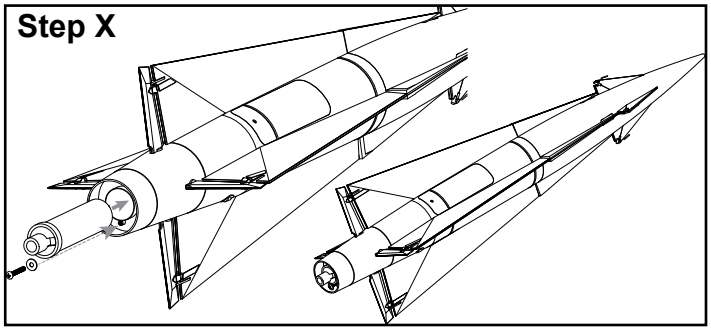

☐ XI. Route the igniter through the guide tube, making sure that there is enough length for the igniter to be pushed all the way up into the sustainer motor. If the igniter is not long enough, extend it using wire (NOT INCLUDED) and take care to stagger the joints so that there is no short between the two sides of the igniter. Plug the igniter passage using clay or poster tack to protect the electronics.

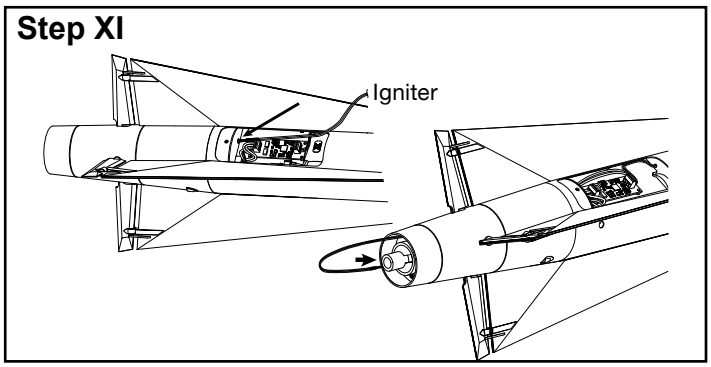

☐ XII. Connect the sustainer motor igniter to the staging channel on the staging electronics.

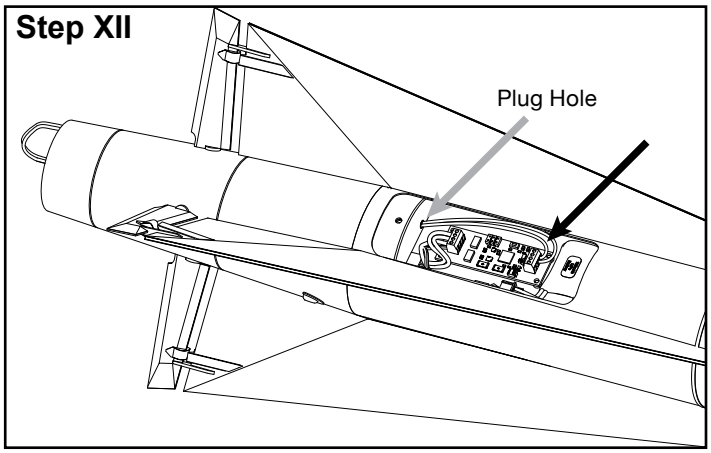

☐ XIII. Optional: If using the electronics for electronic deployment as well as staging, prepare the deployment charge using around 0.5g of FFFF black powder. Trim the ematch wires to 4”-6”

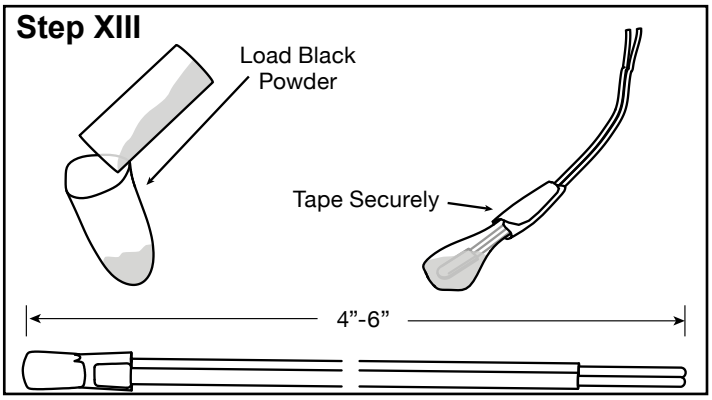

☐ XIV. Optional: Install the deployment charge, connecting it to the deployment channel. And, plug the e-match hole using clay or poster tack.

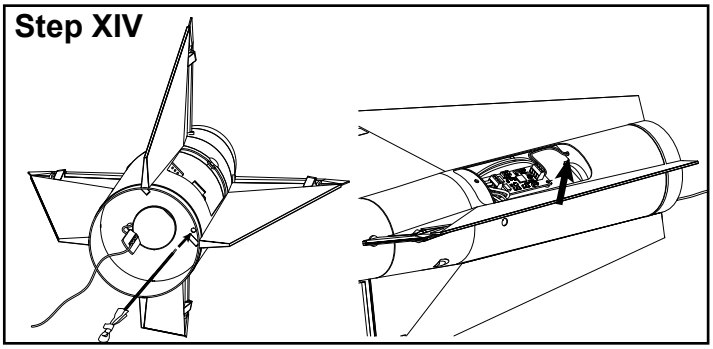

☐ XV. Move the parachute protector as far toward the nose section as possible. Then, Z-fold and tape the length of the shock cord up to the parachute attachment loop.

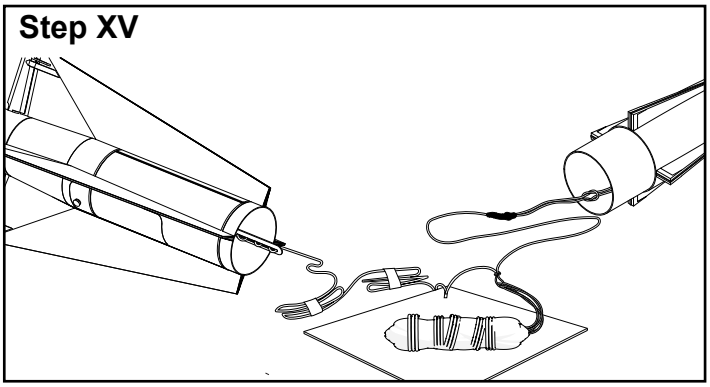

☐ XVI. Fold the parachute and wrap in the parachute protector.

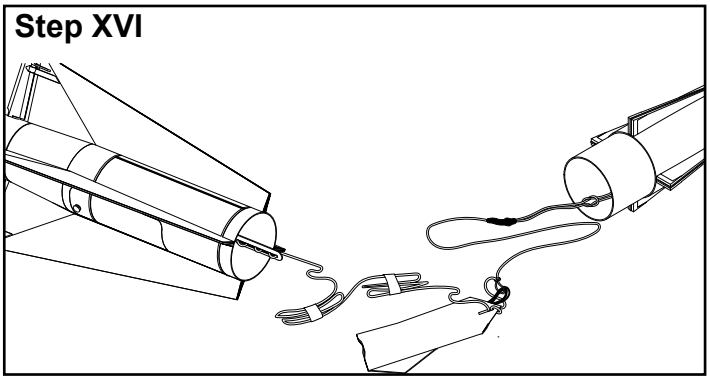

☐ XVII. Slide the forward shock cord, wrapped parachute, and z-folded shock cord into the forward section, and then assemble the Hercules by sliding the forward section into place.

☐ XVIII. Head to the RSO!

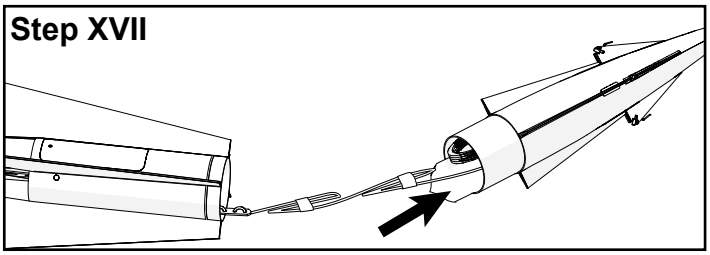

Flight Prep on the Pad

- ☐ XIX. Slide the Nike Booster onto the rail.
- ☐ XX. Install the upper stage igniter into the sustainer (Hercules) motor. Once the igniter is in place, retain it with tape.
- ☐ XXI. Mount the Hercules onto the Nike Booster making sure that the sustainer seats all the way into the inter-stage.
- ☐ XXII. Arm the staging electronics and check for proper function: e.g. battery voltage, continuity, self-test, etc, as per manufacturer's instructions.
- ☐ XXIII. Connect the booster motor wires to the launch control system.
- ☐ XXIV. The Nike-Hercules is now ready for flight!

Continue to follow the countdown and launch procedures.

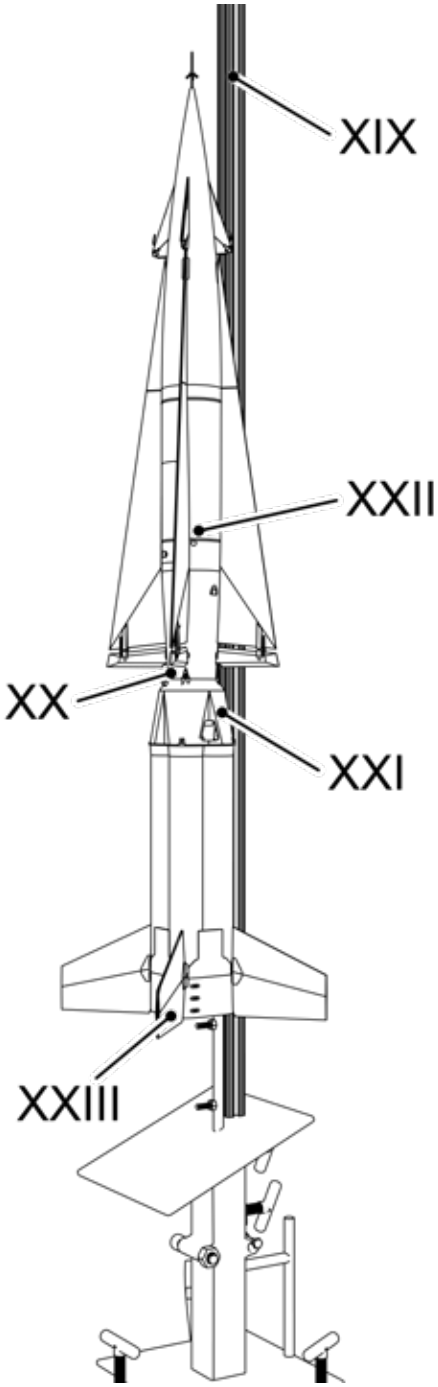

Suggested Motors

Because the Nike-Hercules can be flown on a cluster of either two or four motors and is a two-stage rocket, the suggested motors list is far from comprehensive. Rather, the list includes a selection of motors that are generally available and which have been shown to result in a good flight with a minimum of difficulty. The primary concerns for choosing motors for this rocket fall into two categories: average thrust and ease of lighting.

The booster motors should be chosen so that the cluster will provide a safe thrust/weight ratio (TWR) even if only 75% of the cluster motors light (rounded down to the nearest whole number). For safety, a TWR of at least 5:1 based on the fully loaded rocket, motors included, should be achieved. As such, for a two-motor cluster, the minimum allowable motor thrust is 5x the weight of the loaded rocket while for a four-motor cluster, the minimum allowable motor thrust is 1.7x the weight of the loaded rocket (assuming one of four motors did not light). The average thrust of the sustainer motors is significantly less important as when the motor ignites the rocket will already be moving forward fast enough to be stable, however, it is recommended that the sustainer motor have a thrust that results in a TWR of the sustainer between 2:1 and 10:1. In the case of thrust that exceeds the 10:1 range, any off axis thrust can result in rapid flight deviations due to the low moment of inertia of the rocket. The Hercules missile does best with a more gentle thrust profile.

Due to the (potentially) five motors that must be lit to achieve a fully successful flight in the Nike-Hercules, it is important to ensure that the motors chosen are easy to light. Using a black powder motor in the upper stage is a simple way of ensuring that the upper stage will ignite, but Cesaroni motors are also, generally, an easier to light option. If a standard Aerotech composite motor is to be used (on either stage), an igniter that has been dipped with a small amount of additional pyrogen may be used to improve the chances of full ignition.

Depending upon the motor loadout, the Nike-Hercules can qualify as either a model or high-power rocket – generally as a result of the total propellant mass. If the combined total propellant mass of all the motors in the rocket exceeds 125g, then the rocket will bump up into the high-power category. Propellant weights and total impulse can be found for each motor on the Apogee Components web site. Care should be taken to ensure that flights are made in alignment with local regulatory requirements.
As examples, the chart below shows motor recommended combinations that will be either in the Mid-Power Rocket class (MPR) or the High-Power Rocket (HPR) class.

Nike (Booster) Motors	Hercules (Sustainer) Motor	Class	Altitude (ft.)	Altitude (m)
4x Quest D22-4	Estes E26-4	**MPR**	**1113**	**339**
4x Quest D22-4	Quest F41-5	**MPR**	**1427**	**435**
4x Quest D22-4	Estes F15-6	**MPR**	**1359**	**414**
4x Quest D22-4	Aerotech F20-7	**MPR**	**1700**	**518**
4x Quest D22-4	Aerotech F25-6	**MPR**	**1973**	**602**
2x Aerotech F44W-4	Estes F15-6	**MPR**	**1597**	**487**
2x Aerotech F44W-4	Aerotech F20-7	**MPR**	**1859**	**567**
2x Aerotech F44W-4	Cesaroni F29-8	**MPR**	**1690**	**515**
4x Estes E16-4	Estes F15-6	**HPR**	**1945**	**593**
4x Estes E16-4	Aerotech F20-7	**HPR**	**2189**	**667**
4x Estes E16-4	Cesaroni F32-7	**HPR**	**2001**	**610**
4x Estes E16-4	Cesaroni F29-7	**HPR**	**2027**	**618**
2x Aerotech F67W-4	Estes F15-6	**MPR**	**2078**	**634**
2x Aerotech F67W-4	Aerotech F20-7	**MPR**	**2299**	**701**
2x Aerotech F67W-4	Aerotech F25-7	**MPR**	**2444**	**745**
2x Aerotech F67W-4	Cesaroni F32-8	**MPR**	**2117**	**645**
2x Aerotech F67W-4	Cesaroni F29-8	**MPR**	**2146**	**654**
4x Quest E26-4	Estes F15-6	**HPR**	**1836**	**560**
4x Quest E26-4	Aerotech F20-7	**MPR**	**2078**	**634**
4x Quest E26-4	Aerotech F25-7	**MPR**	**2221**	**677**
4x Quest E26-4	Cesaroni F32-8	**MPR**	**2022**	**616**
4x Quest E26-4	Cesaroni F29-8	**MPR**	**1917**	**584**
4x Aerotech E20-4	Estes F15-6	**MPR**	**2205**	**672**
4x Aerotech E20-4	Aerotech F20-7	**MPR**	**2437**	**743**
4x Aerotech E20-4	Aerotech F25-7	**MPR**	**2577**	**786**
4x Aerotech E20-4	Cesaroni F32-8	**MPR**	**2249**	**686**
4x Aerotech E20-4	Aerotech G40-10	**HPR**	**2986**	**910**
4x Aerotech E20-4	Aerotech F25-7	**HPR**	**3677**	**1121**
4x Aerotech E20-4	Cesaroni F31-8	**HPR**	**3425**	**1044**
4x Aerotech E20-4	Aerotech G40-10	**HPR**	**4063**	**1239**
2x Aerotech F74-4	Aerotech F25-7	**MPR**	**2920**	**890**

MPR = Mid-Power Rocket (no certification required to launch) **HPR** = High Power Rocket (certification required to launch)

Countdown and Launch Procedures

The Nike-Hercules is a large, complicated model. In fact, with many motor combinations, it qualifies as a high-power rocket, rather than a model rocket. As such, flights of the Nike-Hercules should be handled with the utmost respect. Even with the smallest motors in the booster and sustainer, this model can easily fly over 1500' and, as such, it requires a large flying field and due to the dynamic properties of the sustainer (large fin forces and a low moment of inertia), it has the potential to weathercock violently in large gusts at low speeds. So, the rocket should ideally be flown in calm to moderate winds only. If such care is taken, however, the Nike-Hercules has proven itself to be a highly reliable model that provides exceptional flights time and time again.

1. Remove the safety key from the launch controller (if it has been stored there).

2. Prepare the rocket on the rail (as described before in the flight prep section).

3. Attach the clips to the igniter wires. The clips must not touch either each other or the metal blast deflector. Otherwise, a misfire is likely.

4. Stand back from the rocket at a distance determined by safety regulations.

5. Insert the safety key to arm the launch system.

6. Give a loud countdown! 5… 4… 3… 2… 1… LAUNCH

7. Press and hold the button until the engines ignite. Once the rocket is away, remove the safety key.

Misfire Procedure

A misfire is when an engine does not light after the launch button is pressed. This is sometimes a result of the igniter burning but failing to light the engine. At other times, the igniter will not burn at all (this is often indicative of a short between the clips). To deal with a misfire safely, remove the safety key from the launch controller and wait a full minute (60 seconds) prior to approaching the pad. Check that the igniter wires or clips were not touching and causing a short. If they were, the short can be corrected and a launch attempted again. If the engine simply failed to light, remove the old igniter and install a new one. Make sure that the igniter is installed all the way into the engine and that it is in contact with the propellant. Always follow the NAR (National Association of Rocketry) Model Rocket Safety Code when launching model rockets.