ROCKET BEEPER
RB02

USER'S MANUAL

2024.10.17

Lucid Technologies
http://www.lucidtechnologies.info/
Email: info@lucidtechnologies.info

Copyright © 2023 by Lucid Technologies
All rights reserved

The information in this manual has been carefully checked and is believed to be accurate. However, Lucid Technologies makes no warranty for the use of its products and assumes no responsibility for any errors which may appear in this document. Lucid Technologies reserves the right to make changes in the products contained in this manual in order to improve design or performance and to supply the best possible product. Lucid Technologies assumes no liability arising out of the application or use of any product or circuit described herein; neither does it convey any license under its patent rights, nor the rights of others.

Contents

Specifications & block diagram
Description
Battery requirements
Using the RB02
    Attaching the RB02
    Securing the battery
    RB02 operation
Problems & Suggestions
Warranty
Appendix A - Battery charger

Specifications

- Mass
  - Approximately 9.7 grams, without battery, 16 grams with battery
- Dimensions
  - Diameter 24.5 mm
  - Length 51.6 mm
  - Compatible with BT-55 or larger body tubes
- Power
  - 3.1 to 4.2 volt lithium battery
  - JST PH2 connector
- Audio output
  - Approximately 3550 Hertz at 12 volt supply
  - Beep rate 1 ±30% Hertz
  - Sound pressure level 108 dB at 10 cm

Description

The RB02 has several advantages over other acoustic rocket finders. As shown in the block diagram of Figure 1, the RB02 has a DC-to-DC converter that boosts the nominal 3.7 volts from a typical single cell lithium battery to 12 volts. This means that the beeper will always operate at its optimum voltage and produce a loud tone. The microprocessor controls the DC-DC conversion, monitors battery voltage and light levels, and times the operation of the RB02. The beeper has a built-in oscillator that produces a series of beeps at approximately 1 Hz - half a second on, half a second off. When this document says the RB02 is beeping, that means it is producing a series of beeps. A series of short beeps is easier for the human ear to locate than a constant shrill tone. The RB02 uses several techniques to maintain operation as long as possible while not discharging the lithium battery beyond the point that it can no longer be recharged.

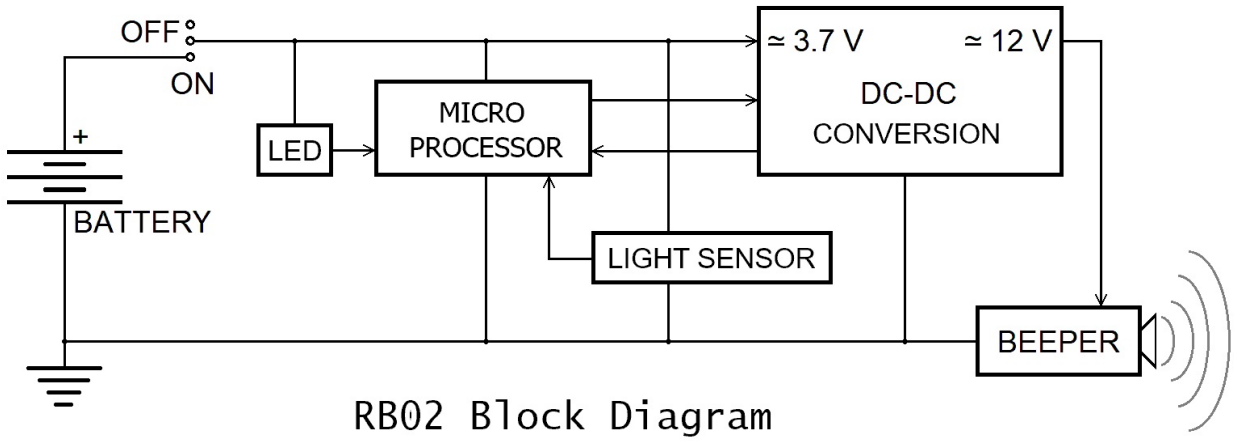

Figure 1

Battery requirements

Batteries used with the RB01 are NOT compatible with the RB02. The polarity of the battery connector was changed to match batteries sold by Apogee Components. Spare batteries and chargers are available from Apogee Components and Lucid Technologies. A 100 to 150 mAh battery will power the RB02 for several hours.

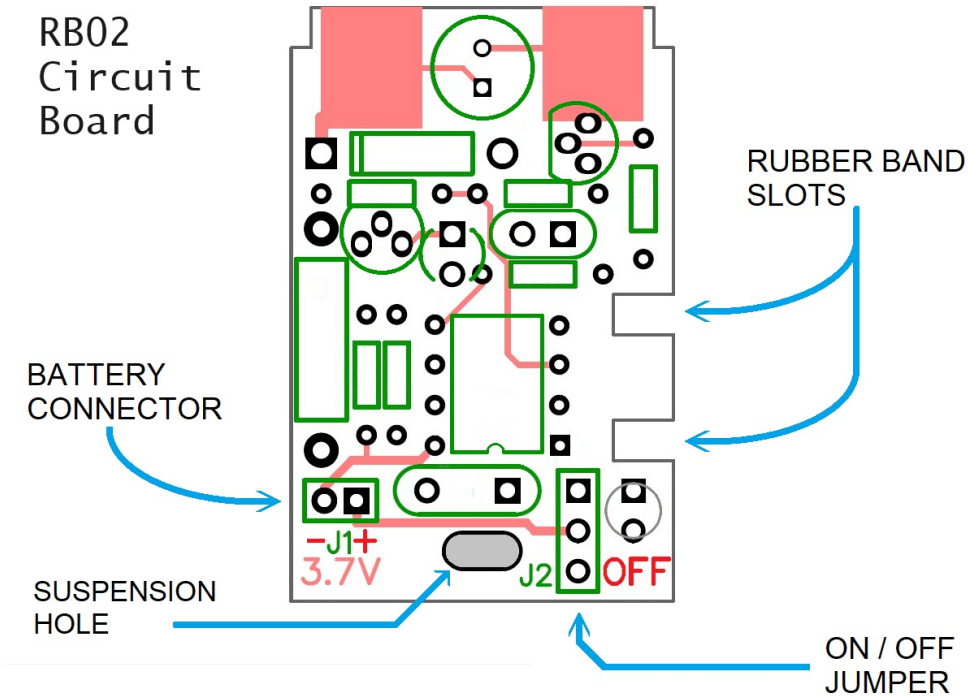

Figure 2. RB02 circuit board top view.

Using the RB02

Attaching the RB02. The RB02 can be attached to your rocket via the "suspension" hole in the circuit board. A flexible cord (such as kevlar string) passed through this hole will keep the RB02's beeper pointed at the ground during recovery.

Securing the battery. The battery can be held against the bottom of the RB02 circuit board by a rubber band wrapped around the circuit board. Both ends of a short rubber band go in slots on the side of the circuit board, see Figure 2. The battery can be more securely attached with the following methods. In addition to the rubber band, use double-sided foam tape on the bottom of the circuit board to hold the battery in place. In addition to double-sided foam tape, you could use a short piece of large diameter transparent heat-shrink over the RB02 circuit board and battery. Shrink it to secure the battery in place then cut an access to the ON/OFF jumper. Be sure the heat-shrink is transparent so that the light sensor will still work correctly. If the heat-shrink is large enough extend it over the black cylindrical beeper module; do not cover the hole where the sound comes out. This will not only secure the battery but help protect the entire RB02 from damage that can occur during ejection or a crash.

RB02 operation. When you are ready to launch your rocket, move the jumper on J2 from the OFF position to the ON position. Similarly, when you have recovered your rocket and want to turn off the RB02 remove the jumper from J2. Stow the jumper in the OFF position so you don't lose it.

CAUTION - Do not turn on the RB02 when it is in direct sunlight. The high light sensor voltage can cause the RB02 to detect a low battery condition and shutdown, as mentioned in step 4 below. This is caused by voltage leakage in the microprocessor's analog multiplexer and sample-and-hold. Recent software updates have compensated for this problem.

The list below explains the actions of the RB02 after it is turned ON. Figure 5 shows these in flow chart format.

1. The LED will blink twice. RB02s with updated software, as mentioned in the CAUTION, will blink three times.
2. The RB02 will beep for two seconds,
3. The LED will blink twice.
4. The microprocessor will check the battery voltage to confirm it is greater than the minimum operating voltage of 3.1 volts. If the battery is ≤ 3.1 volts, the LED will rapidly flash 16 times, then the RB02 will shut down. You will need to recharge the battery.
5. If the battery voltage is > 3.1 volts the RB02 will quietly wait one minute. This time allows you to put the RB02 in the rocket, close up the nose cone and get the rocket on the launch pad.
6. After waiting for one minute, the RB02 will wait for a additional six minutes if it is in the dark. At any time during those six minutes, if the RB02 is ejected from the rocket and senses daylight it will begin to beep. (Note that unpainted hollow plastic nose cones may allow enough light into the

rocket for the RB02 to sense daylight.) At the end of the seventh minute (1+6) the RB02 will begin to beep even if it is still in the rocket on the launch pad.
7. The RB02 will beep continuously as long as the battery voltage remains > 3.4 volts. If it takes a long time to recover the rocket and the battery voltage drops to less than 3.4 volts, the RB02 will shift to low power mode.
8. In low power mode, the RB02 will alternately beep for 4 seconds then be quiet and blink for 8 seconds. Low power mode will continue until the battery voltage drops below the minimum operating voltage of 3.1 volts.
9. When the battery voltage drops below 3.1 volts, the LED will rapidly flash 16 times, then the RB02 will shut down. Discharging a single cell lithium battery to less than 3.1 volts may cause it to fail permanently.

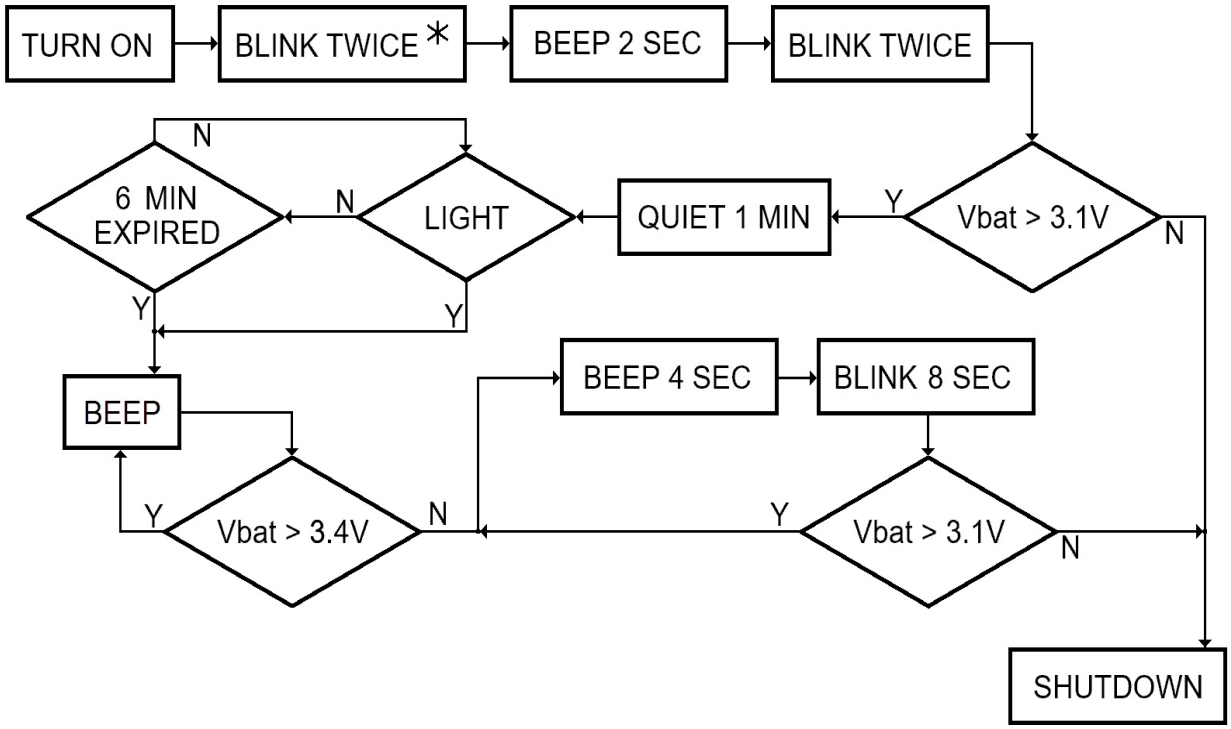

Figure 3. RB02 firmware flow chart. * Three times for updated software.

Problems and suggestions

If you have any problems with your RB02, or have suggestions to improve it, please contact: info@lucidtechnologies.info.

Warranty

Lucid Technologies warranties the RB02 for defects in parts and labor for 30 days after purchase or until the first use of the RB02 in a model rocket, whichever occurs first. You must test your RB02 before field use. A model rocket launch is an inherently violent event for the contents of the rocket - which are subject to high acceleration, excessive temperatures, impacts at ejection and the not infrequent crash.

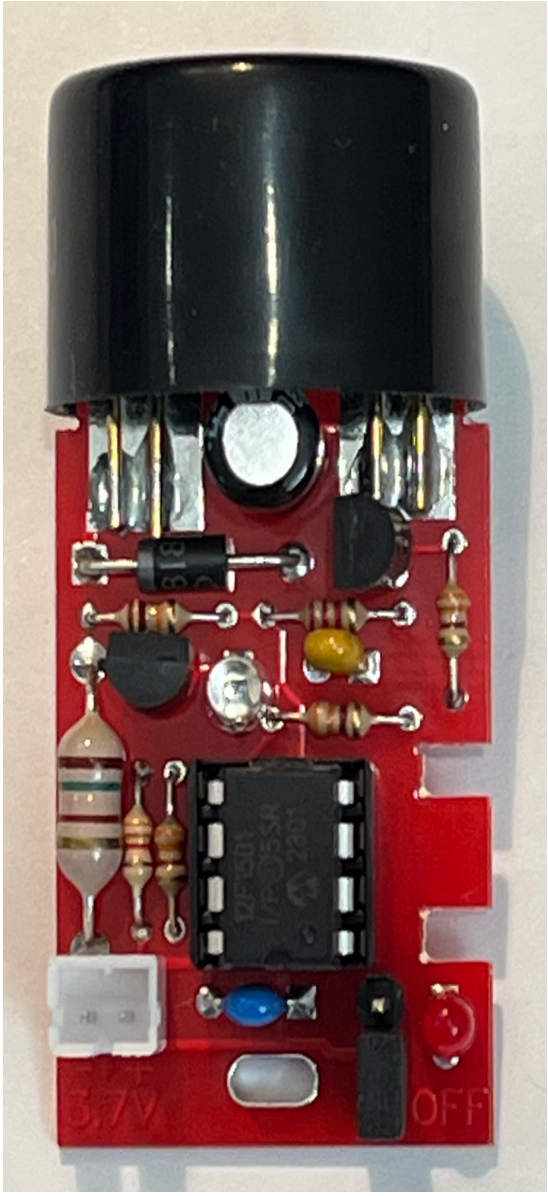

Figure 4. RB02 top view

.

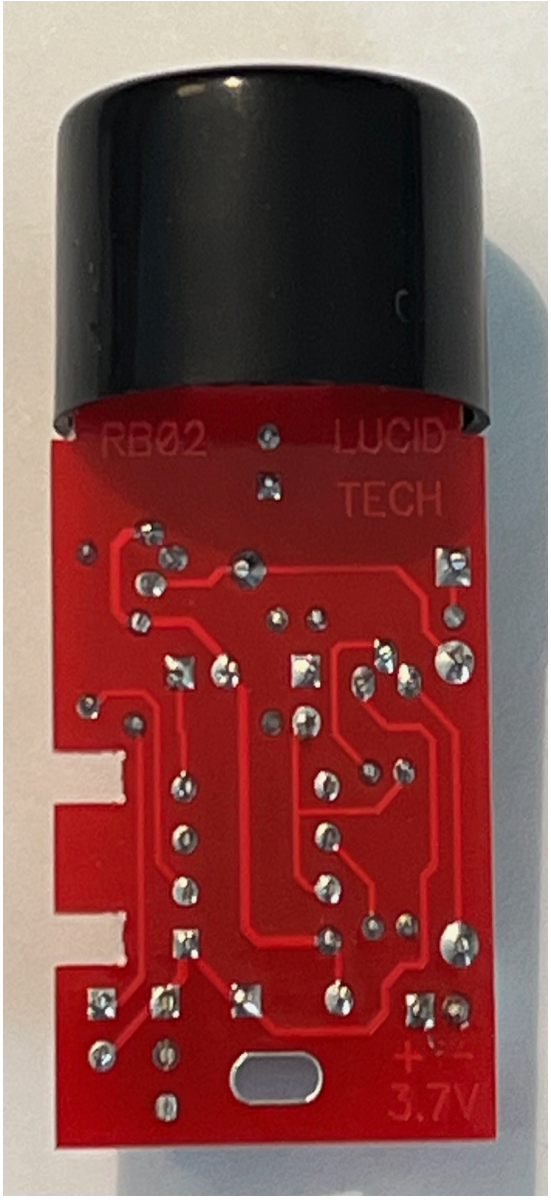

Figure 5. RB02 bottom view.

Appendix A
Battery Charger Module
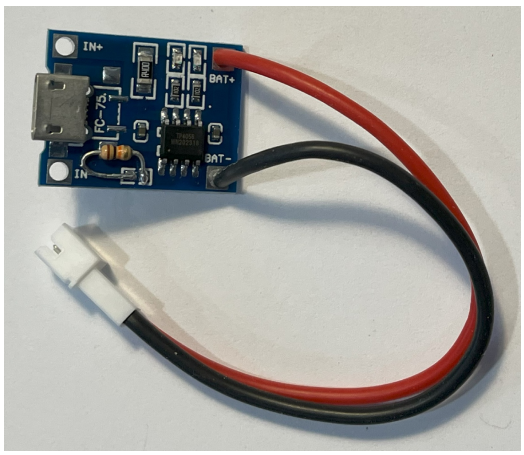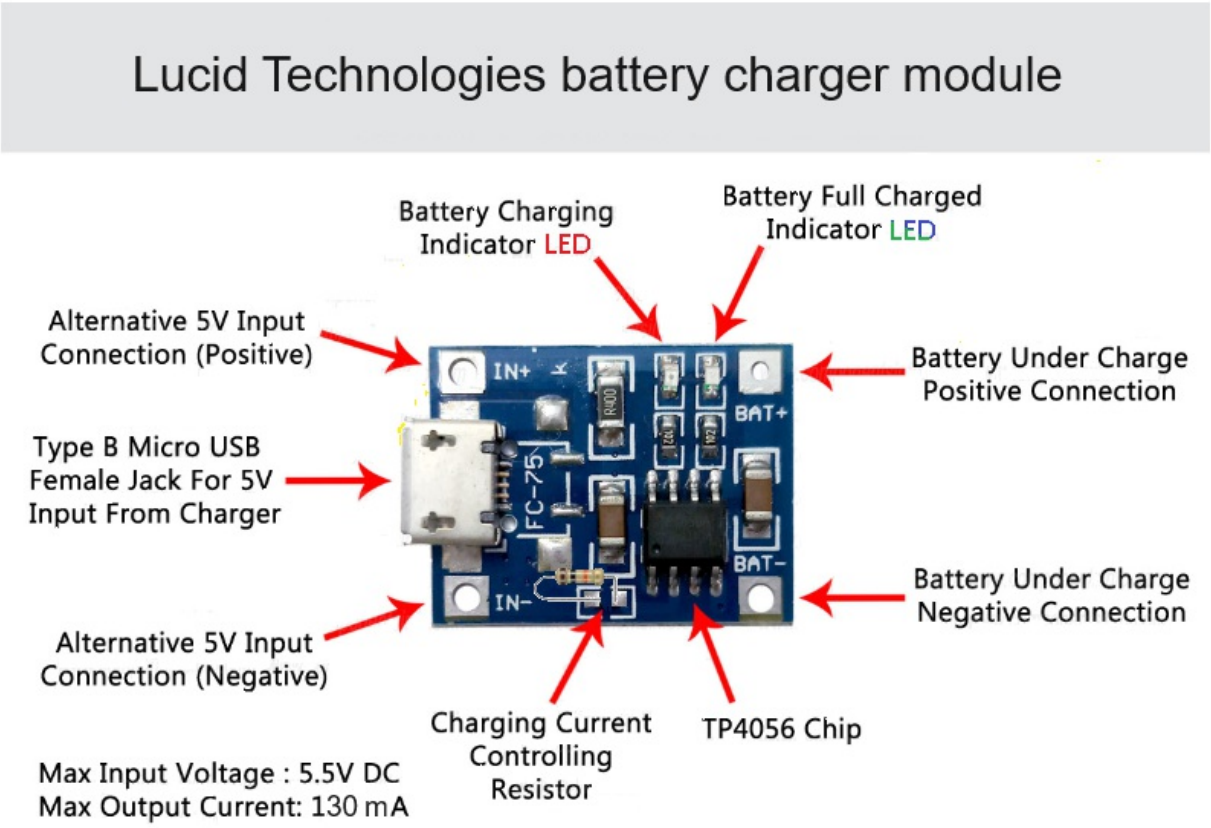
The battery charger sold by Lucid Technologies is a modified commercial single cell lithium charger module. Lucid Technologies adds a connector cable compatible with batteries for the RB02, and changes the max charge current to approximately 130 milliamps. The charger uses a 5 volt input from a micro-USB connector. The Full LED may be either green or blue.