#09245 **Made In USA**

Needed Tools and Materials

- ☐ Compatible Ebay (to mount electronics to)
- ☐ Drill and Screwdriver (for mounting Transmitter to ebay)
- ☐ Compatible Battery (for powering Airborne Transmitter)

Optional Tools / Finishing Supplies

- ☐ On/Off Switch (To connect power transmitter)

SIMPLE GPS TRACKER

MID-RANGE TRACKING SYSTEM

VER 4.0

Simple GPS Tracker Parts List

Item Name	Qty
GPS Hand Held Receiver	1
Airborne Transmitter	1
Mounting Spacers	4
#2 Wood Screws	4
Simple GPS Tracker Instructions	1

*Battery NOT included

6 56779 09245 8

Manufactured in the USA by:
Apogee Components Inc.
Colorado Springs, Colorado, USA
Visit us online at:
www.ApogeeRockets.com

GPS Tracker Instructions P/N 31139 *Updated 11/14/2018

Table of Contents

Introduction 2
Mounting Airborne Transmitter 2
Operation 2
Remote Sync Mode 3
Operational Modes: Distance & Compass 3
Calibration Procedure 4
Changing Radio Frequency 5
Setup Remote Radio 5
Changing Operating Frequency 5
Mounting Template 5
Programming Receiver "KEY 6
Programming Receiver "BASE FREQUENCY 6
Push Button Switch Functions 7
Matching a Airborne Transmitter to the Hand Held Receiver 7
Remote Transmitter LED operation 7
Manufacturer Care Recommendations 7
Specification Receiver 8
Specification Transmitter 8
Warranty 8
Liability 8
FCC Regulatory Information 8

Introduction

Your new GPS rocket tracking system will make it much easier to find your rocket after flight! The Simple GPS Tracker uses a small airborne transmitter in the rocket to send the rocket's location to the hand held receiver where the distance and direction of the rocket landing spot is displayed. Unlike most tracking systems, the Simple Tracker does not require the use of a computer, cell phone, extra antenna or cell phone app to help you locate your rocket. This makes the Simple Tracker a very viable system for easily locating your rocket while still offering high accuracy and being simple to use. The tracking system has been designed as a mid-range system capable of tracking your rocket 6-8 miles away, or 20-30 miles with a Yagi antenna (not included). It may seem that the tracker is not that accurate when it is first powered on, even when the transmitter and receiver are right next to each other. This is because to get really good "fix" data, the hand held receiver requires some level of motion. As the signals change from the satellites due to movement, the receiver is better able to get an accurate location. This tracking system will typically lead you to within 10-20' of your rocket!

Mounting Airborne Transmitter

☐ 1. Find an appropriate location on your ebay sled to mount the airborne transmitter (***Mounting Template*** on **Page 5**). This kit comes complete with 4 mounting spacers and 4 #2 wood screws for mounting the transmitter. Once mounted, the circuit will have to be connected to a battery and (optionally) a power switch (not included) to enable it to be turned on and off. The red and black wires can be used to connect to your battery and a switch if desired.*Always use good wiring practices when connecting the electrical supply to the transmitter. Make sure to keep all wires away from the transmitting antenna and make them as short as possible. If the rocket will experience very high accelerations, make sure to secure the wires to prevent them from becoming disconnected during flight.*

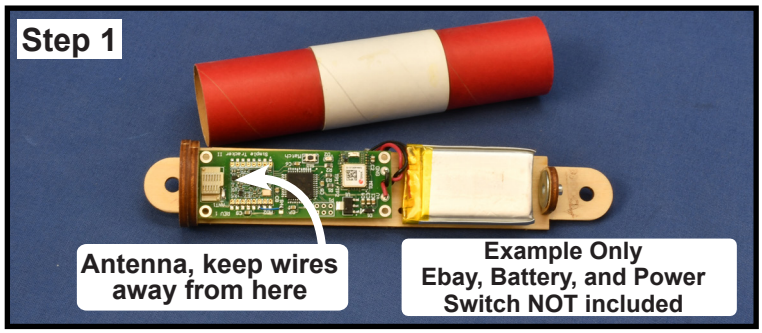

Operation

☐ 2. Once power is applied to the transmitter, it is automatically in the "RUN" state. No additional input is required.

☐ Only press the "Match" button during the first 5 seconds of power-up to enter radio match mode (not typically needed unless you're changing the base operating frequency - so don't press it). *See the **Changing Radio Frequency** section (**Page 5**) of this manual for instructions on how to accomplish this.*

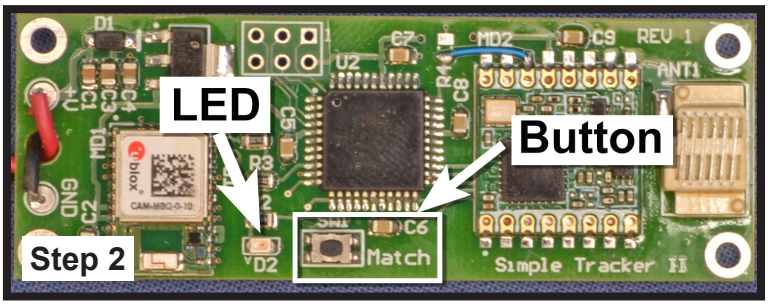

☐ 3.When the airborne transmitter is powered on and in the RUN state the LED will remain on for 5 seconds then flicker intermittently while it looks for satellites. Use the hand-held receiver (instructions below) to verify the number of satellites. After that, the LED will then blink with 2 flashes during data transmission

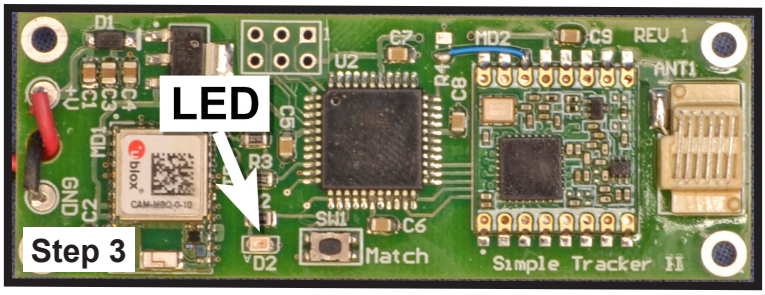

☐ 4. Turn on the hand held receiver. The receiver will display a startup screen showing the software version. After a couple of seconds the receiver will display the local GPS status screen. This screen will show the number of satellites seen by the receiver. It may take several minutes for the receiver to get a good GPS lock, so be patient. Once the receiver sees 5 satellites, the display will switch and show the transmitter's status information. It will now look for the transmitter, which is **Remote Sync Mode**. *The receiver must see 5 satellites before tracking can proceed*

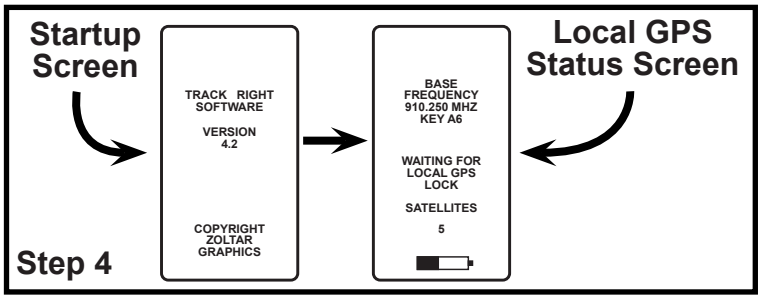

Remote Sync Mode

☐ 5. When the hand held receiver is in the **Remote Sync Mode**, an audible beeper will be heard every time the receiver collects a good data packet from the airborne transmitter. This will let you know that both the transmitter and the receiver are operating correctly and on the same base frequency.

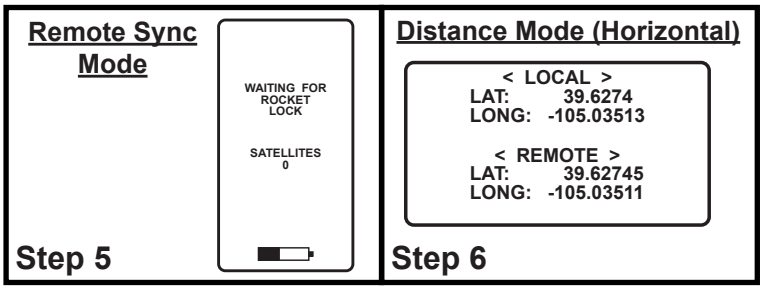

Operational Modes: Distance and Compass

☐ 6. Once both the hand held receiver and the airborne transmitter have obtained 5 satellites in their field of view, the display screen will switch to the **Distance Mode** (rotate receiver horizontally to view) and display the latitude and longitude information for both the receiver and the transmitter. The "Local" is the hand held receiver and the "remote" is the airborne transmitter.

☐ 7.The hand held receiver can also be operated in **Compass Mode** (which is more useful when walking to locate your rocket). This is where the direction and distance between the two units is displayed. To switch between these two operating modes, simply turn the hand-held unit face down and then flip it back face up as shown. This movement will cause the hand held unit to switch the display mode each time the flip is executed.

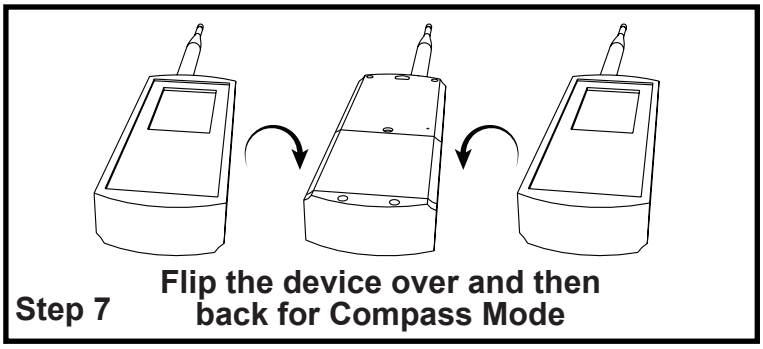

☐ 8. In **Compass Mode**, you'll notice the "fix indicators", which are the small boxes below the compass, one to each side of the screen. The indicator on the left side of the display is the “local” fix indicator (hand held receiver) while the one on the right side of the display is the airborne transmitter (inside the rocket). Both boxes must be solid as shown. If the rocket fix indicator is not solid, move to a location where data reception from the rocket can be obtained to get a good fix. If local fix indicator is not solid, move out doors or to a location that allows a good satellite fix.

On the screen, "D" is the distance to the rocket along the ground. "A" is the current altitude of the rocket above the receiver (note: this altitude info is not stored to get a peak altitude of the rocket). "DEG" is the compass direction from the rocket is from the receiver.

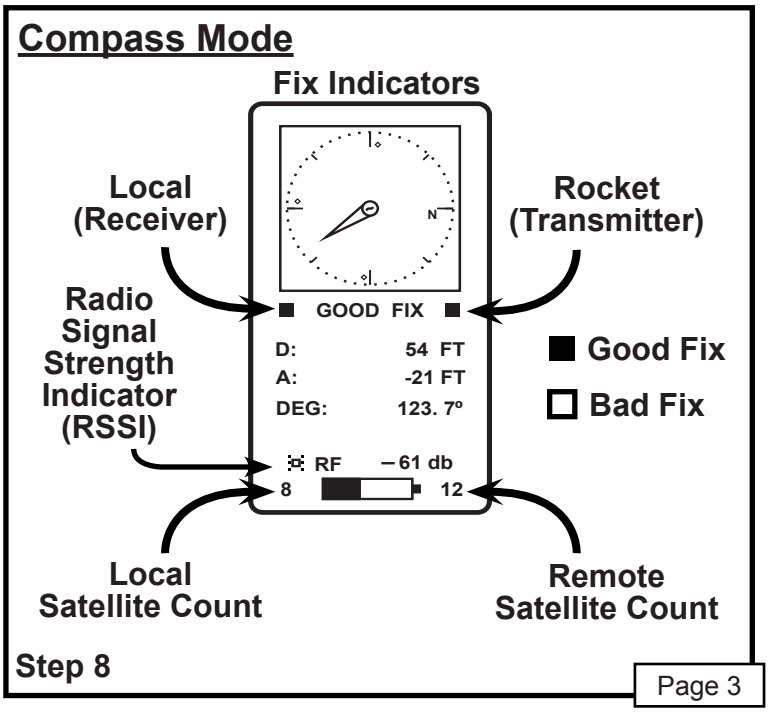

Calibration Procedure

In order for the system to accurately track your rocket's location, it is important that the compass in the hand held receiver be accurately calibrated. Be sure to perform the calibration outdoors, preferably at the site where you intend to fly the rocket. Move away from any large metal objects like cars, buildings, etc. You will also want to use a good quality compass (see your smart phone app) as a reference to align the north direction with your receiver's compass calibration.

You should check the calibration procedure each launch day by verifying the compass is indicating north when pointed north. This will ensure accuracy in locating your rocket.

There are six different calibration directions that will have to be performed to make sure the compass chip has fully read the magnetic fields.

The reason this is required is that the compass has an x, y and z magnetic field sensor and each sensor must find the minimum and maximum magnetic field. This is a simple way to make sure this happens. It is a shortcut to spinning the receiver in a complete sphere several times, although that will work also.

NOTE: There is a newer procedure for calibrating that is simpler than described below. What is below still works, but see the video on the Apogee website at: https://www.apogeerockets.com/Electronics-Payloads/Rocket-Locators/Simple-GPS-Tracker

Please first read through the following steps completely to become acquainted with the process before beginning the calibration procedure.

☐ 9. To begin, pick the antenna end of the hand held receiver and face that end north. (Use an actual compass or cell phone compass for an accurate comparison)

☐ 10. Activate the **Calibration Procedure** when the hand held receiver is in one of the two operational mode screens (**Distance** or **Compass Mode**). Press the **Push Button** in the receiver with a paper clip to activate (More Push Button details on **Page 7**).

☐ 11. Once the switch is pressed, the display will show that the receiver is calibrating. Calibration starts immediately after button is pressed.

☐ 12. Once the fast beeping starts, wobble the hand held receiver up-and-down and side-to-side while slowly rotating it on its axis by 360 degrees. This ensures that every possible magnetic field in the direction with the antenna pointed north will be acquired. Do this for 15 seconds until the beeping stops. Then flip the receiver over and wobble and twist the receiver in the number "2" direction. Repeat this procedure in all six directions shown in the graphic. Once you've gone through the six directions, return the receiver to position #1 where the antenna is pointed North. Your receiver must be flat and facing magnetic north when the calibration process ends to get a good calibration.

NOTE: *The controller will accept calibration data for 105 seconds, so performing the calibration process on each of the six directions will leave 15 seconds to get the con*

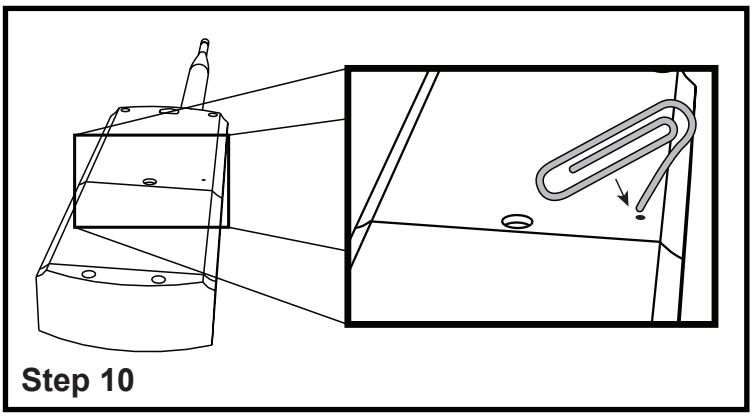

Step 10

Step 11

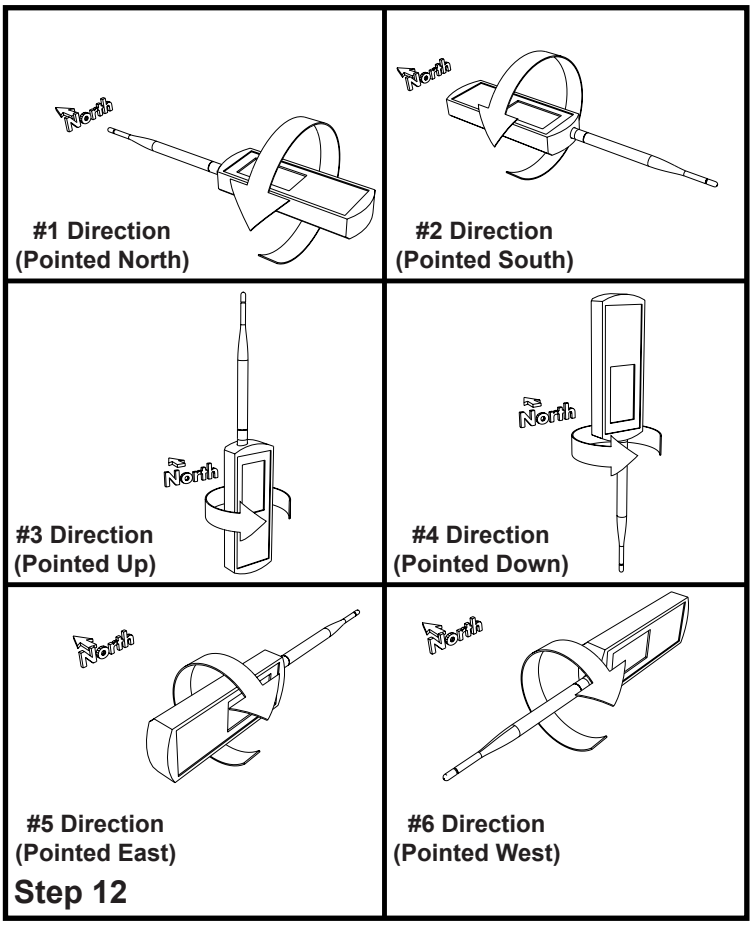

Step 12

troller aligned with magnetic north before the calibration completes and the final 10 beeps come to an end. Once the compass has been calibrated in all six directions and assigned a north direction, the unit will switch back to tracking mode automatically.

☐ 13. Once the GPS has a lock the receiver is ready for flight.

Changing Radio Frequency

There might be two reasons you might want to change frequencies: First, if you bought a new transmitter for another rocket and wanted everything to match. The new one would have to be set to the existing RX/TX pair. Second if two people want to fly at the same time and are unlucky enough to have the same base frequency setting, one person should change frequencies so you don't accidentally track the wrong rocket.

The Simple Tracking System can be set to operate in 16 different base frequencies in the 900MHz amateur radio band. During manufacturing, the hand held receiver and airborne transmitter are programmed to be matched and set to one of the 16 different frequencies randomly. During power up of the receiver, the operation frequency will be shown in the startup procedure screens.

To change the operational frequency of the receiver and transmitter, perform the following steps:

Setup Remote Radio

☐ 1. Make sure the hand held receiver is powered off.

☐ 2. Power the airborne transmitter **on**, and press the "MATCH" button (see image on page 2).

Changing Operating Frequency

☐ 1. Make sure power switch on the hand held receiver is turned off.

☐ 2. Remove the four mounting screws holding the back cover of the receiver in place.

☐ 3. Turn switch #6 to the "on" position to enable frequency programming.

☐ 4. Use the **Frequency Setting Chart** to select the new frequency and set switches 1-4 accordingly.

☐ 5. Turn **on** the power switch to the hand held receiver.

☐ 6. The display will show the progress of the frequency programming.

☐ 7. When programming is complete, the receiver will beep. Then turn the power **off** to both the receiver and the transmitter.

☐ 8. Turn switch #6 back to the **off** position to enable normal operation.

☐ 9. Slide the switch **on** the receiver back to the run position.

Freqency Setting Chart

Frequency MHz	S4	S3	S2	S1
908	OFF	OFF	OFF	OFF
909	OFF	OFF	OFF	ON
910	OFF	OFF	ON	OFF
911	OFF	OFF	ON	ON
912	OFF	ON	OFF	OFF
913	OFF	ON	OFF	ON
914	OFF	ON	ON	OFF
915	OFF	ON	ON	ON
916	ON	OFF	OFF	OFF
917	ON	OFF	OFF	ON
918	ON	OFF	ON	OFF
919	ON	OFF	ON	ON
920	ON	ON	OFF	OFF
921	ON	ON	OFF	ON
922	ON	ON	ON	OFF
923	ON	ON	ON	ON

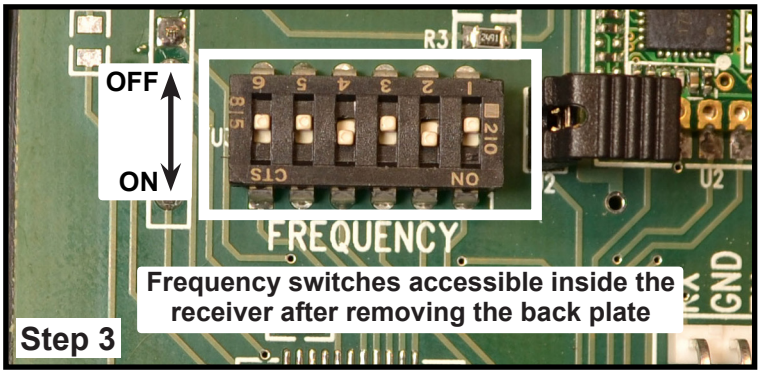

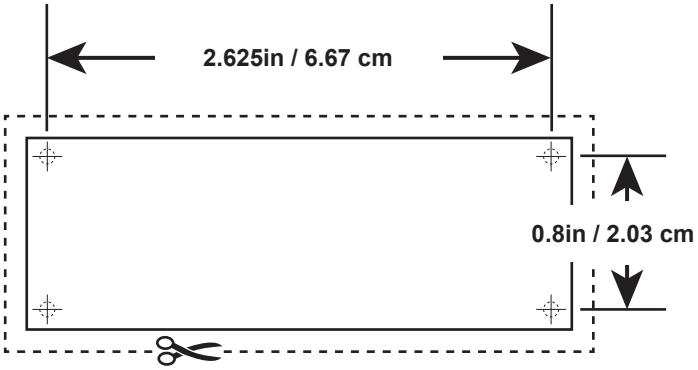

Mounting Template (Mentioned on Page 1)

☐ 10. Reinstall the back cover and screws.

Note: Setting the operational base frequency will only occur when switch #6 is in the on position. Changing the other switches while switch #6 is turned off will not result in changing the frequency but will make the receiver display the wrong frequency at start up. Do not change frequency switches unless you are truly programming the system as described above.

Both the KEY and the BASE FREQUENCY are combined together by the controller to expand your choices. By programming these two setting procedures you expand to 16x16 choices for channels (256 combinations).

Programming Receiver "KEY"

☐ 1. With power turned off to the hand held receiver, remove the four screws holding the back cover on.

☐ 2. Set the FREQUENCY program switches (6 & 5) as shown in the graphic to program the operational "KEY". You may pick any combination for switch locations 1-4 to set a unique "KEY".

☐ 3. Once the switches are set, turn on the power switch. The display will stay in the startup screen and once the "KEY" programming is complete, 3 audible beeps will sound.

☐ 4. After the three audible beeps finish, turn power off on the receiver.

Programming Receiver "BASE FREQUENCY"

☐ 5. With power turned off to the hand held receiver, set the switches as shown in the graphic to program the operational "BASE FREQUENCY". You may pick any combination for switch locations 1-4 to set a "BASE FREQUENCY".

☐ 6. Once the switches are set, turn power on for the receiver.

☐ 7. The receiver display will now show the progress of the frequency programming. Once complete, the receiver will instruct you to turn power back off.

☐ 8. This completes the programming of the "KEY" and "BASE FREQUENCY" for the receiver.

☐ 9. Once the KEY and BASE FREQUENCY on the receiver have been set, place switches (5 & 6) back into the normal operation mode configuration.

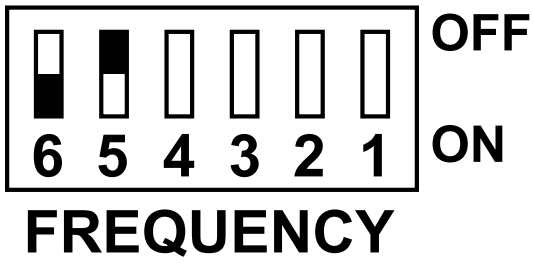

PROGRAM KEY SWITCH SETUP
S6 – ON
S5 – OFF
S1-S4 – KEY

Step 2

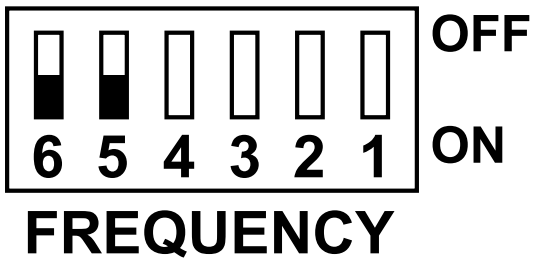

PROGRAM BASE FREQUENCY SWITCH SETUP
S6 – ON
S5 – ON
S1-S4 – BASE FREQUENCY

Step 5

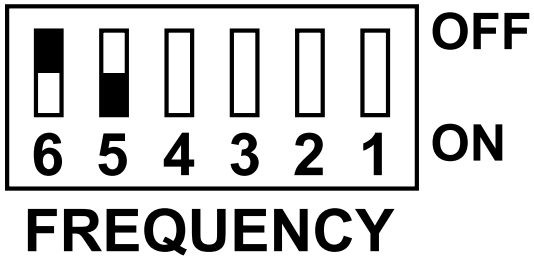

NORMAL OPERATION
S6 – OFF
S5 – ON
S1-S4 – BASE FREQUENCY

Step 9

Push Button Switch Functions

The Simple Tracker incorporates a push button switch that is accessible with a paper clip from the back side of the hand held receiver. This switch performs different functions depending on which display screen is active when the button is pressed. The function table shows the action for a given screen. The paper clip insert graphic is on **Page 4, Step 10.**

- ☐ 1. Pressing the Push Button when the hand held receiver is in the **Local GPS Status Screen** will force the unit to begin programming the transmitter to match the receiver's frequency and KEY settings (Transmitter must have switch set to "PROG"). The programming radio screen will be displayed and once the process is complete, the receiver must be powered off.
- ☐ 2. Pressing the push button when the receiver is in the **Remote Sync Mode** will cause the hand held to switch into **Compass Mode** (**Step 8, Page 3**). In this mode the local GPS latitude and longitude will be valid and the tracking arrow on the operational compass screen will point north. To exit this mode, power must be cycled off to the unit.
- ☐ 3. Pressing the push button when the hand held receiver is in an **Operational Mode (Compass or Distance)** will cause the unit to go into the **Calibration Procedure** (**Page 4**). The six point calibration routine will run and once complete, the hand held will return to the Operational Mode. Cancel the Calibration Procedure if it is inadvertently entered by turning the power to the hand held unit off before the calibration is complete.

Push Button function table

Display Screen	Push Button Function
Start Up Screen	None
Local GPS Status Screen	Changing Operating Frequency
Remote Sync Mode	Skip and enter Compass mode
Operational: Compass Mode	Calibrate Procedure
Operational: Distance Mode	Calibrate Procedure

Matching a Airborne Transmitter to the Hand Held Receiver

- ☐ 1. To match any airborne transmitter to the hand held receiver, make sure both units are powered off.
- ☐ 2. Slide the RUN/PROG switch on the transmitter board to the PROG position.
- ☐ 3. Apply power to the transmitter. The LED should flash one time and then stay off.
- ☐ 4. Turn power on to the hand held receiver and wait until the device shows the waiting for local GPS status screen.
- ☐ 5. At this time, insert a paper clip into the back of the receiver and depress the push button.
- ☐ 6. The receiver will enter the radio program mode and program the transmitter to match the receiver. You should see three flashes from the LED on the transmitter.
- ☐ 7. Once complete turn power back off for both units and slide the RUN/PROG switch on the transmitter back to the run position.
- ☐ 8. Turn both units back on and continue operation.

Remote Transmitter LED operation

- ☐ RUN MODE – On for 60 seconds at power up with flicker off. Then 2 flashes during data transmission.
- ☐ PROG MODE – Short flash at power up. Then 3 flashes during programming.

Manufacturer Care Recommendations

- The RF connector on the hand held receiver, like all RF connectors, has fine threads that can be damaged by dropping the unit or other abuse. When not tracking your rocket, remove the antenna and place the protective cap on the RF connector.
- Place the protective RF connector cap on the receiver when calibrating the compass. Antenna is not required for compass calibration
- Avoid dropping your receiver.
- Avoid storing you receiver in hot sunny areas like the dash of a vehicle.
- Clean your receiver with a lightly damp soft cloth.
- Avoid sharp or hard objects coming in contact with display screen.
- To avoid scratches, clean display screen by breathing on it to produce moisture and then rub with soft cotton cloth only.

Specification Receiver

Operating Frequency	902-928	MHz
Base Frequency Channels	256	
Sensitivity	-130	dbm
Bandwidth	125	kHz
Range	6-8	Miles, Standard Antenna
Range*	20-30	Miles, *Yagi Antenna
Compass Type	9DOF	Tilt Compensated
Compass Accuracy	1	Degrees
Screen Update Rate	1.5	Second
Display	64x128 pixels	Graphic
Batteries	4 x AA	
Size	7 x 2.5 x 1	Inches
Operation Temperature	10-50	ºC
Antenna Connector	RSMA	Female

***Yagi antenna is not included**

Specification Transmitter

Operating Frequency	902-928	MHz
Output Power	17	dbm, Spread Spectrum
Modulation Width	125	kHz
Transmit Rate	3-6	Seconds, Random
Transmit Duration	200	mS
Supply Voltage	3.7-16	VDC
Supply Current	50	mA
Supply Current, Transmitting	180	mA
Supply Connection	Wire	6" Red and Black #24AWG
Antenna	Helix	Built In
Size	1 x 2.8	Inches
Weight	15	Grams

WARRANTY

All Fins & Fire products are warrantied to be free from manufacturing defects for a period of one (1) year from the date of manufacture. This warranty does not cover damage due to misuse, abuse, alteration, or operation outside of the recommended operating conditions included with the product. This warranty is offered in lieu of any other warranty expressed or implied by other suppliers, distributors or marketing firms. Contact Fins & Fire directly for all warranty claims.

LIABILITY

Due care has been employed in the design and construction of this product so as to minimize the dangers inherent in its use. As the installation, setup, preparation, maintenance, and use of this product is beyond the control of the manufacturer, the purchaser and user accept sole responsibility for the safe and proper use of this product. The principals, employees, and vendors of the manufacturer shall not be held liable for any damage or claims resulting from the use of this product. If the purchaser and user are not confident in their ability to use the product is a safe manner it should be returned to the point of purchase immediately. Any use of this product signifies acceptance of the above terms and conditions by the purchaser and user.

FCC REGULATORY INFORMATION

This device complies with Part 15 of the FCC rules. Operation is subject to the following two conditions: (1) This device may not cause harmful interference, and (2) this device must accept any interference received, including interference that may cause undesirable operation.

This device is intended to be used only for educational and experimental purposes in amateur rockets which are classified as aircraft by the Federal Aircraft Administration (CFR 14 101.25), and which must by FAA and NFPA regulations be operated at least 1500’ away from any populated building. Although unlikely, this device may cause interference with consumer devices that run on the unlicensed 902-928MHz frequency band, and therefore must not be used in residential, commercial or industrial areas.

Copyright 2023, Fin’s and Fire Rocketry. All rights reserved. Manual Version 4.0