Skill Level 1 – Easy to Construct and Fly!

The Apprentice rocket from Apogee Components is a great way to introduce modelers to rocketry. It comes with a plastic fin unit that greatly simplifies assembly of the rocket, and virtually guarantees a straight and safe launch.

While it is easy to build, the rocket is still small and light-weight, allowing it to zoom to incredible heights. It will never bore you, because it can be used with a variety of rocket motors, so you can pick how much performance you want.

The other nice thing is that this is a durable rocket. It comes with a heavy-duty body tube, and stout and sturdy fins. It was designed to take the punishment that new rocketeers might give it!

Apprentice

Kit #5039

Apogee Apprentice Parts List

P/N	Description	Qty
15580	Plastic Fin Unit	1
19398	PNC-24C	1
19399	PNC-24 C/D Shoulder	1
10094	AT-24/9” - Apprentice	1
10068	AT 18/2.75”	1
13031	CR 18/24 (Green)	2
13029	CR 13/18 (Blue)	1
13051	1/8” Launch Lug 1.0	1
24043	Regular Crimped Engine Hook	1
29505	Kevlar Shock Cord 100# X 30 inch	2.5
29500	Cotton Parachute String	6ft
23011	Parachute Rings	6
29120	Apogee 10” Plastic Parachute	1
41035	Apprentice Decal	1
31078	Apprentice Instruction Sheet A 11X17	1
31079	Apprentice Instruction Sheet B 8.5X11	1

Other Tools and Materials Needed

Scissors
Hobby Knife
Masking Tape
Carpenter’s Wood Glue (or White Glue)
CyA Adhesive (medium viscosity) or Plastic Glue
Aluminum “Angle” to draw lines on the tube
Ruler
Paint Supplies (Spray Paint, brushes, etc.)

This paper shock cord anchor is used in step 9 on page 3.

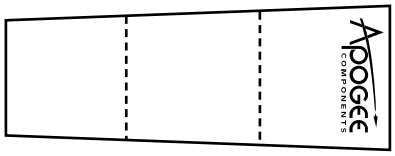

The Apprentice kit is just another fine product from:

APOGEE COMPONENTS
3355 Fillmore Ridge Heights
Colorado Springs, CO 80907 USA
web site: www.ApogeeRockets.com

Apprentice Rocket Assembly

☐ 1. Glue the nose cone shoulder into the base of the nose cone using plastic glue or super glue (use extreme care when using super glue). Set aside to dry.

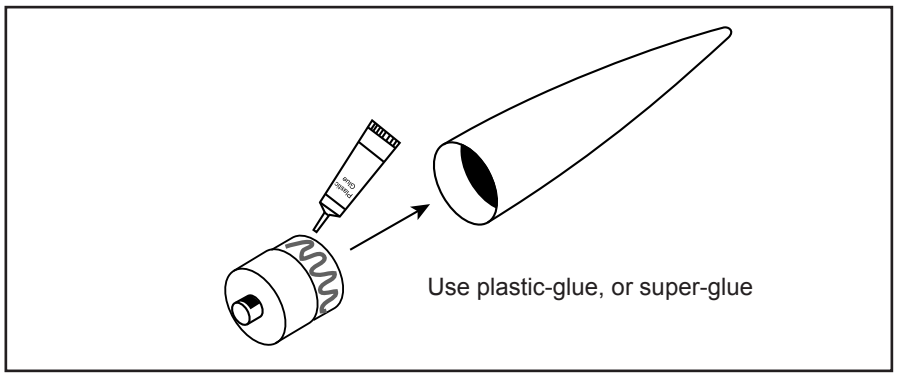

☐ 2. Mark the motor mount tube 2-1/4” from the rear with a 1/8” (3mm) line. Cut a slot along this line with a hobby knife and insert the forward tang of the engine hook into the slot. Wrap several layers of masking tape around the middle of the tube to hold the clip in place.

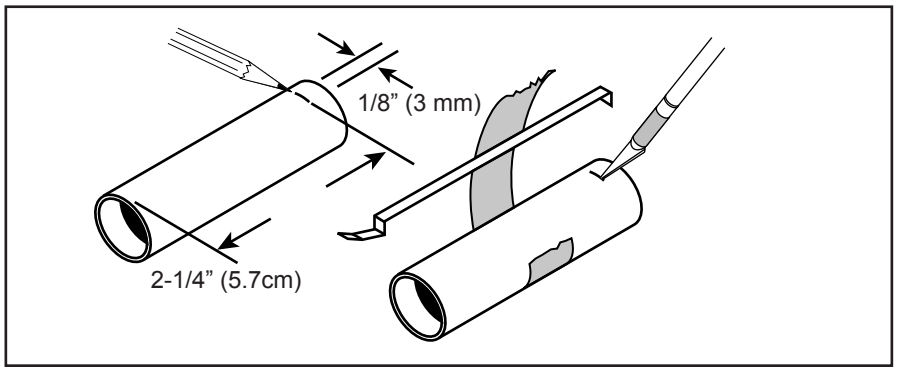

☐ 3. Apply a light bead of wood glue inside the front end of the motor mount tube and glue the blue centering ring inside the tube. It should rest against the front tang of the motor clip on the inside of the tube.

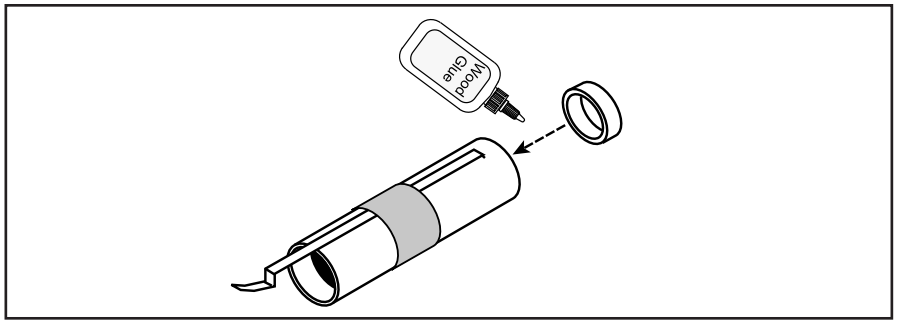

☐ 4. Take one of the green motor mount centering rings and cut out a section about 3/16” (5 mm) wide - enough to clear the width of the metal engine hook. Next, run a bead of glue around the rear outside of the motor mount tube (except where the motor clip lies). Glue the split centering ring so that the rear end of the ring is even with the rear end of the motor mount tube and the split in the ring clears the engine hook.

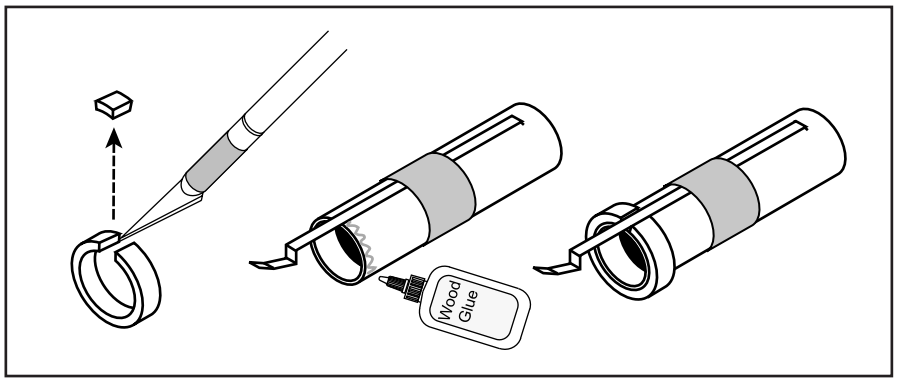

☐ 5. Apply a thin bead of plastic glue (or super glue - again, use extreme care if using super glue) inside the rear end of the plastic fin unit and slide the motor mount assembly into it. The end of the motor mount should be flush with the end of the fin unit.

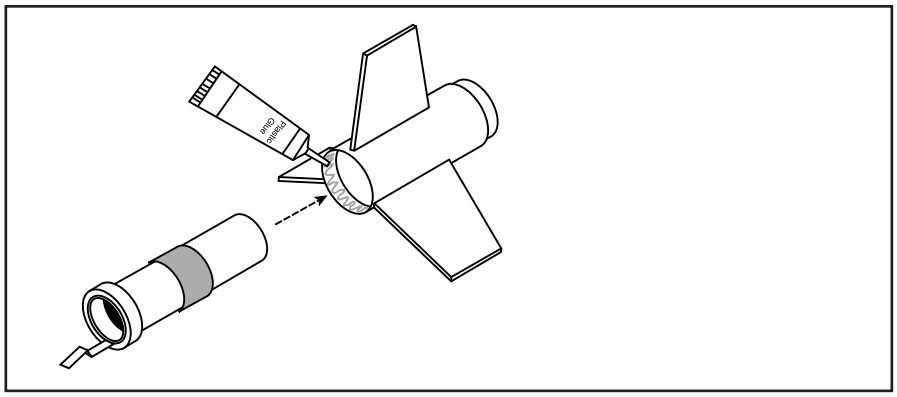

☐ 6. Apply a bead of wood glue around the front of the motor mount tube that extends out of the front of the plastic fin unit. Slide the remaining green centering ring over the tube so that it rests against the front shoulder of the plastic fin unit.

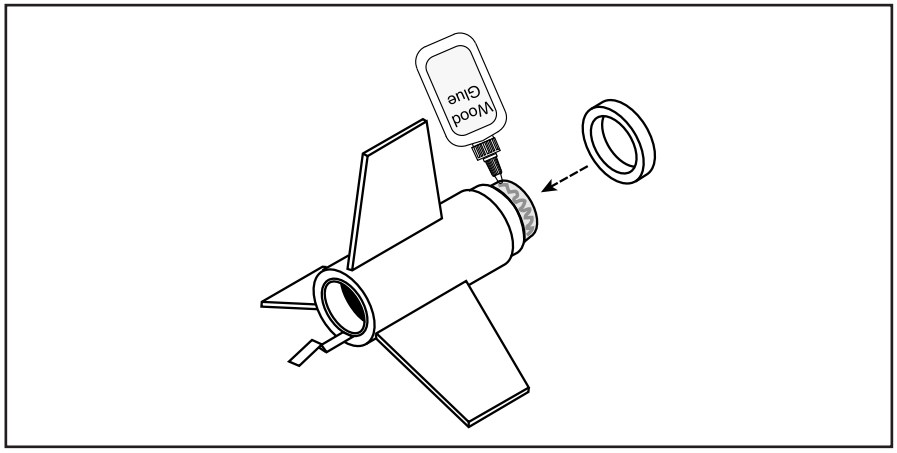

☐ 7. Draw a pencil line down the length of the long body tube using a door jam or aluminum angle. Mark the tube 1-1/2” (3.8 cm) from one end. Apply glue along one side of the launch lug and attach it to the body tube, aligning the back end with the mark just made. Make sure the launch lug is parallel with the body tube as shown. Let the glue dry. Then apply a fillet of glue to both sides of the launch lug for extra strength. Allow this to dry too before proceeding.

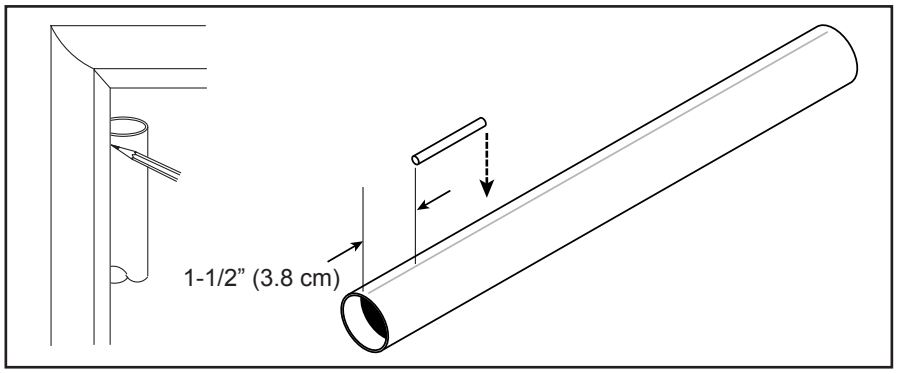

☐ 8. Apply wood glue inside the rear end of the body tube (the end closest to the launch lug). Slide the plastic fin unit into the body tube until it stops against the shoulder of the fin unit. Be sure the launch lug is centered between two of the fins.

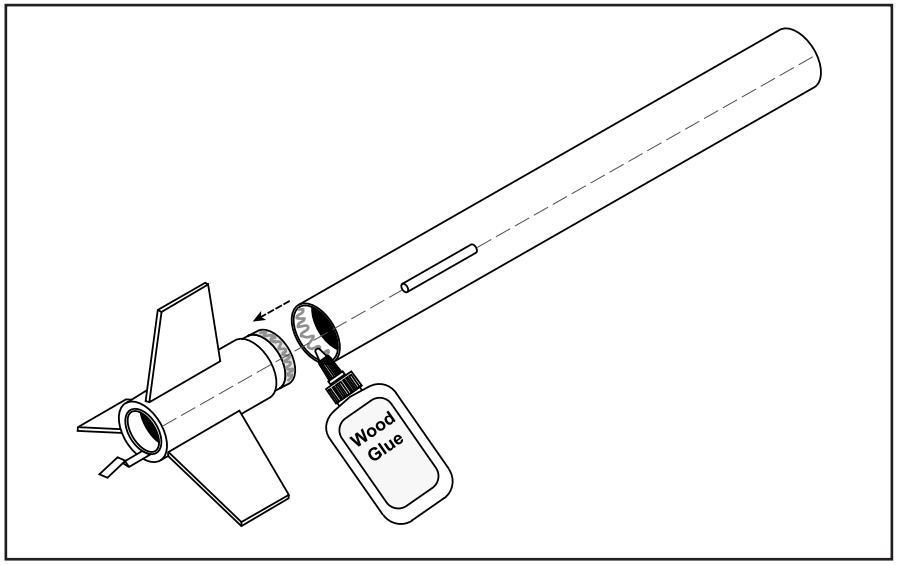

☐ 9. Cut out the paper shock cord anchor from page 1. Smear wood glue over one surface. Lay the yellow Kevlar® shock cord at a diagonal along the paper shock cord anchor. Fold as shown in the illustration. While the glue is still wet, curl the edges upward so that it will conform to the inside of the body tube. Allow the glue time to dry.

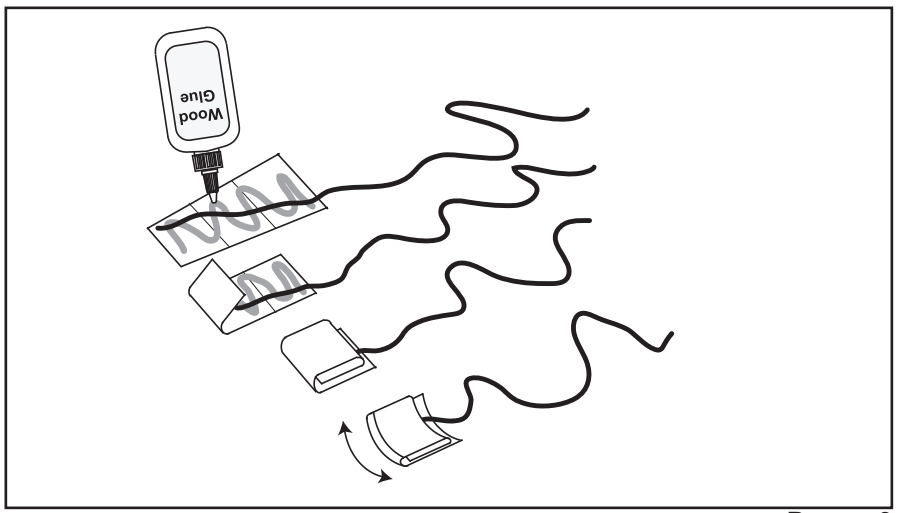

☐ 10. Apply wood glue to the back side of the shock cord mount, and position it as deep inside the front of the body tube as possible. It needs to be at least 1-1/4” deep to allow the nos cone to be put onto the tube. Allow the glue time to fully dry.

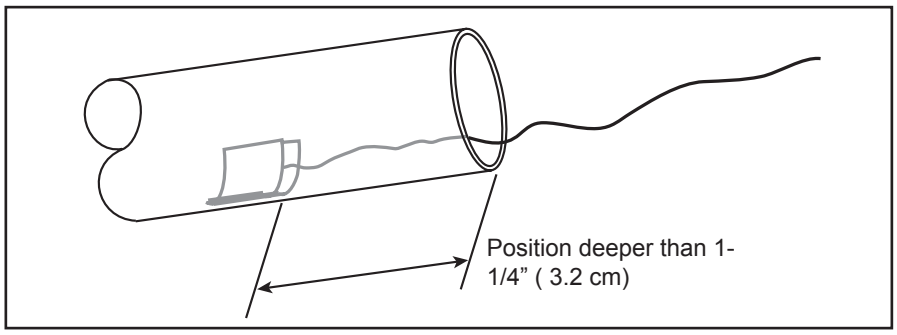

☐ 11. Tie the loose end of the yellow shock cord to the eyelet on the base of the nose cone shoulder. Apply a drop of wood glue to the knot to secure it in place.

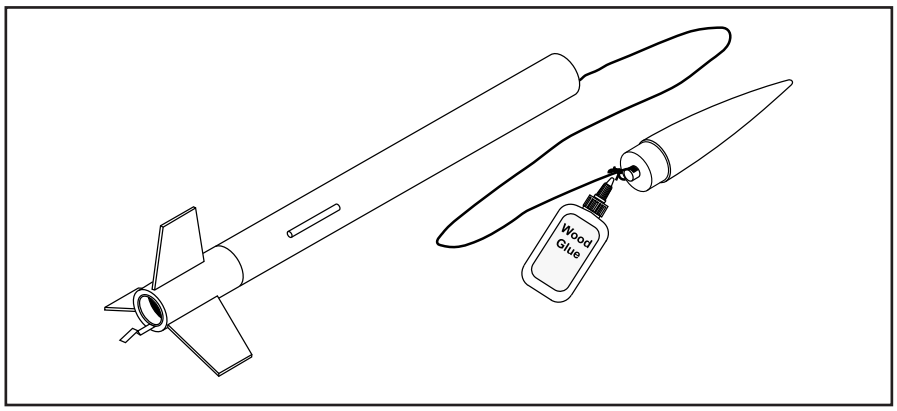

☐ 12. Cut the parachute canopy from the plastic sheet. Attach the six self-adhesive rings to the corner points printed on the canopy. Carefully poke a hole through the plastic in the middle of each of the rings. Wind the parachute lines as shown so you can cut the shroud line string into three equal lengths. Tie the three strings to the corners holes just made. Tip: apply a drop of wood glue to each knot to hold it permanently in place. Allow the glue to dry before folding the parachute for flight.

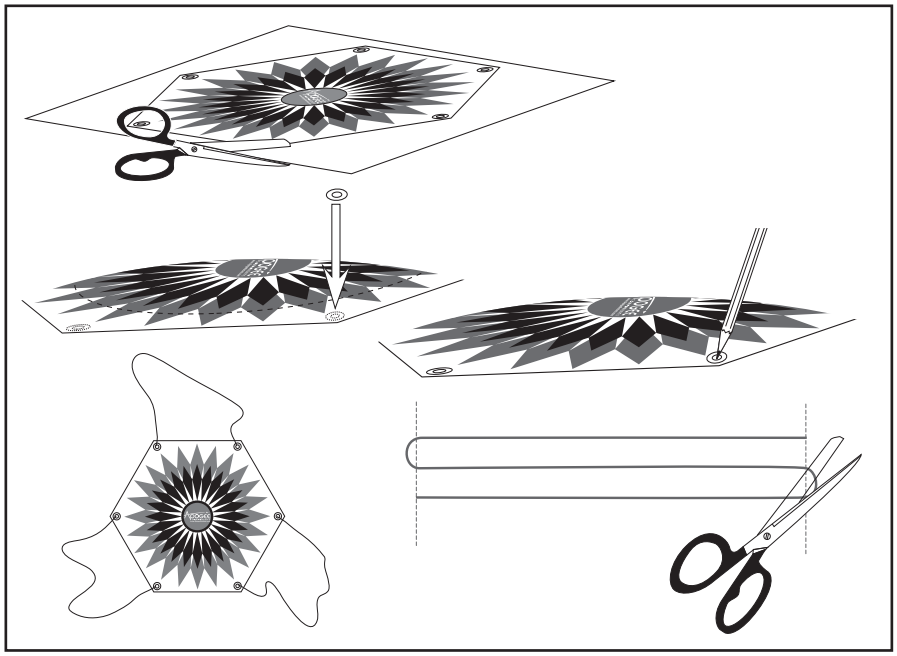

☐ 13. Holding the parachute at the center of its top, pull the lines together to even up the ends. Thread the three looped lines through the loop at the base of the nose cone. Take the top of the parachute and pull it through all three string loops at the same time and then pull to tighten the knot. This securely attaches the parachute to the rocket.

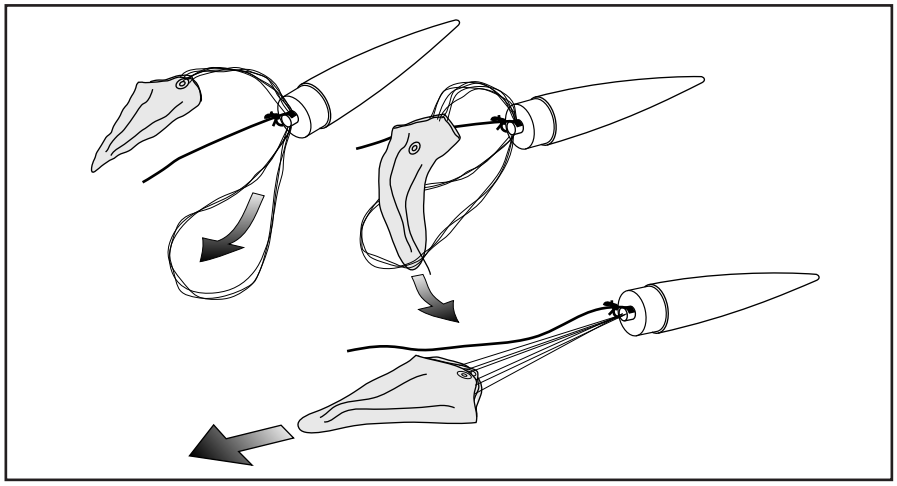

☐ 14.The assembly of the Apprentice rocket is now complete. You can paint your rocket if you desire and attach the decal for more decoration. To paint, roll a piece of paper and insert it into the aft end of the body tube so you can hold the model while painting it. For best results, paint the model with primer before using the final paint color, which is black. Follow the directions on the paint can, and always paint outdoors with the wind against your back. Let the paint harden at least 24 hours before proceeding.

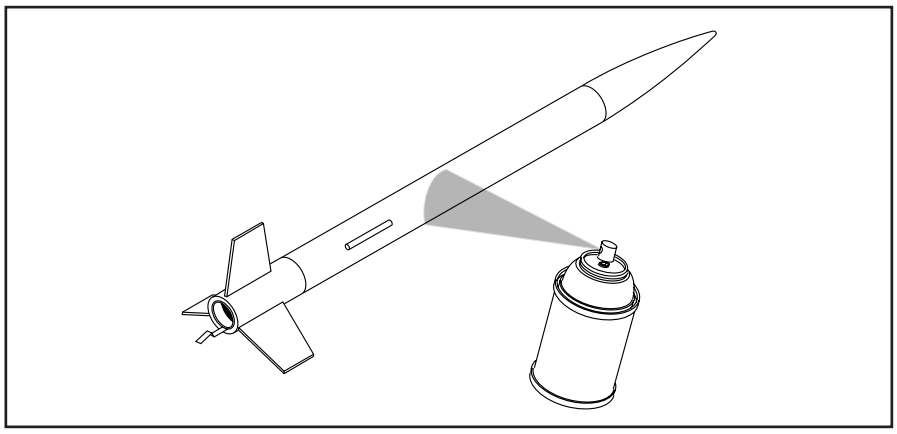

☐ 15. After the paint has dried, you can decorate and personalize your Apprentice rocket with the decal stickers provided.

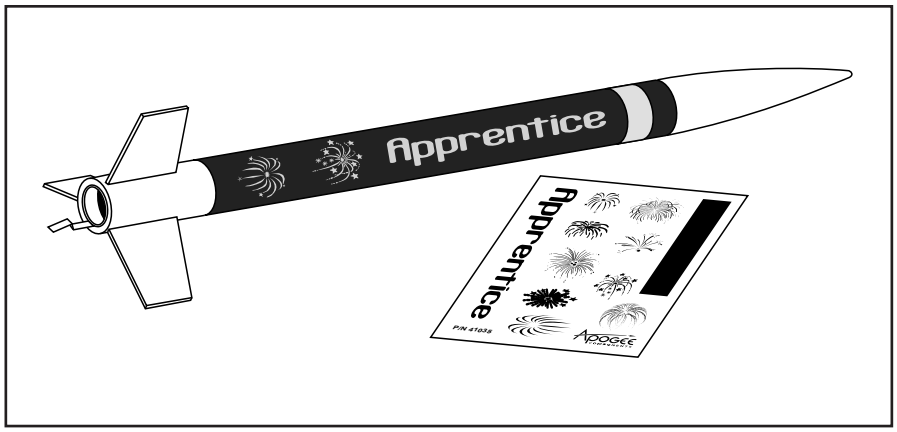

The BEST way to fold your parachute for flight!

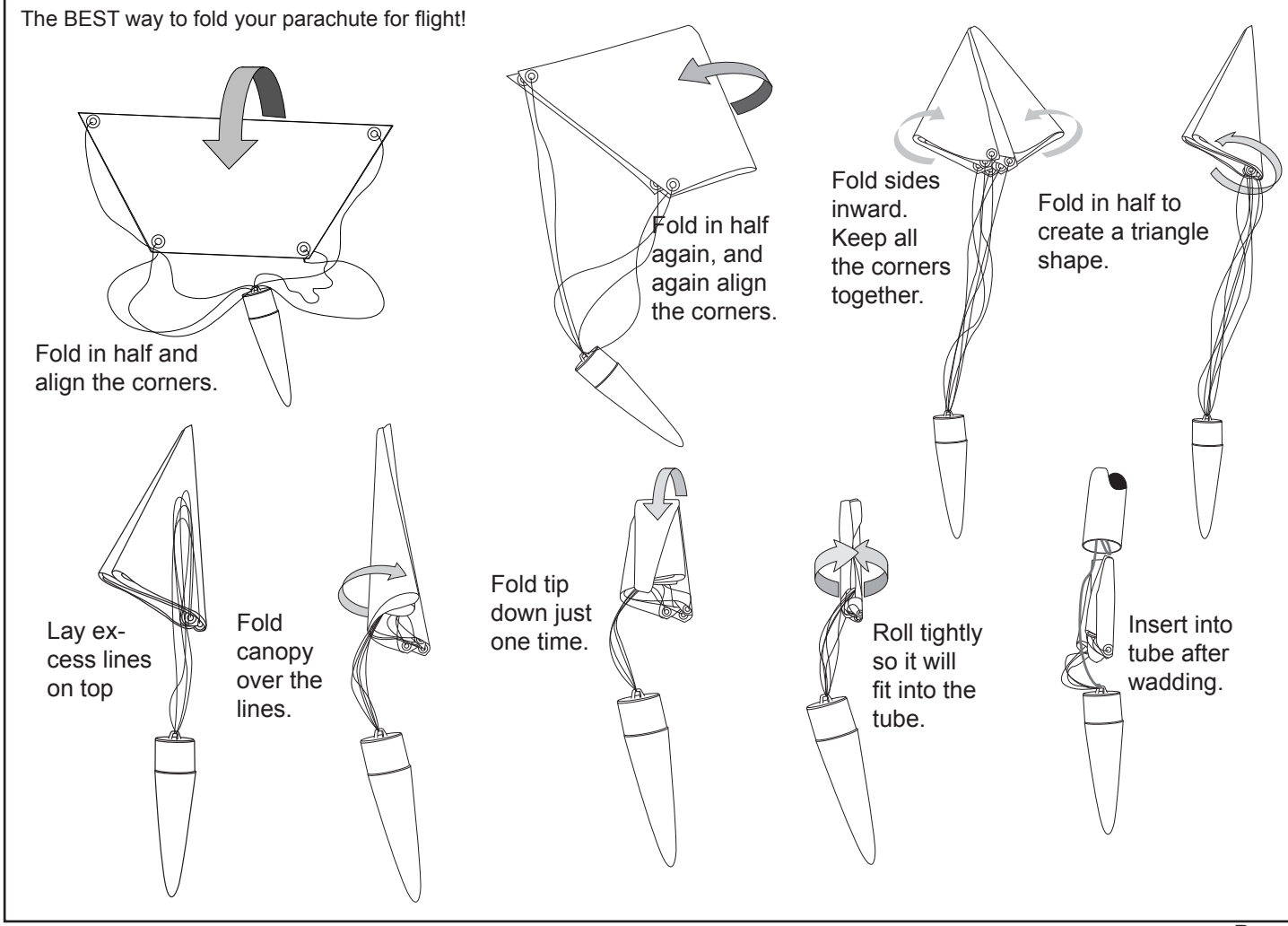

Launching the Apprentice Rocket Kit

The motor matrix shown here was developed using the RockSim software (www.RockSim.com). Initial conditions: slightly breezy (3-7mph wind), straight up launch angle. You can use RockSim to find other motor combinations that will work well in the Apprentice rocket kit. Download the RockSim file for this kit and a free trial-version of RockSim at: www.ApogeeRockets.com/Apprentice.asp

Launch Supplies Needed

To launch your rocket you will need the following supplies:

- ◆ A model rocket launching system.
- ◆ Flame resistant recovery wadding.
- ◆ Recommended 18mm diameter Rocket Engines — see the motor selection chart.

Rocket Preflight

A. Loosely crumple and insert 3 sheets of recovery wadding into the body tube.

B. Carefully fold the parachute using the instructions on page 5 and insert it into the tube with the shock cord.

C. Insert the motor into the motor tube until the motor hook holds it in place.

D. Insert and secure the engine igniter as directed on the package the engines came with.

Countdown and Launch Procedure

Fly your rocket on a large field that isn't near any power lines, trees, or low flying aircraft. The larger the field, the greater your chances of recovering your rocket. The launch area around the pad must be free of dry weeds and brown grass. Launch only during calm weather with very little or no wind and good visibility. Always use a launch pad that includes a blast deflector.

10. Remove the safety key from the launch controller
9. Slide the launch lug over the launch rod to place the rocket on the pad. The rocket should slide freely over the rod.
8. Attach the micro-clips to the igniter. The clips must not touch each other or the metal blast deflector.
7. Stand back from your rocket as far as the launch wire allows (at least 5 meters - 15 feet).
6. Insert the safety key to arm the launch system. The light (or buzzer) on the controller should come on.

Give a loud countdown 5 ... 4 ... 3 ... 2 ... 1 ... LAUNCH!

Push and hold the button until the engine ignites. Then remove the safety key and place the safety cap on the launch rod.

Misfire Procedure

Occasionally the igniter will burn, but the motor will fail to ignite. If this happens, the cause is that the pyrogen on the igniter was not in contact with the engines propellant. When an ignition failure occurs, remove the safety key from the launch controller and wait 60 seconds before approaching the rocket. Remove the old igniter from the engine and install a new one. Make sure that the igniter is insert fully into the engine and touches the propellant. Secure the igniter as directed on the engine package and repeat the countdown and launch procedure.

Always follow the NAR* Model Rocket Safety Code when launching model rockets.

*National Association of Rocketry
**Kevlar® is a brand name of E.I. DuPont for their selection of aramid fibers. Only DuPont makes Kevlar®

Motor Selection Chart: How High Will The Apprentice Fly?
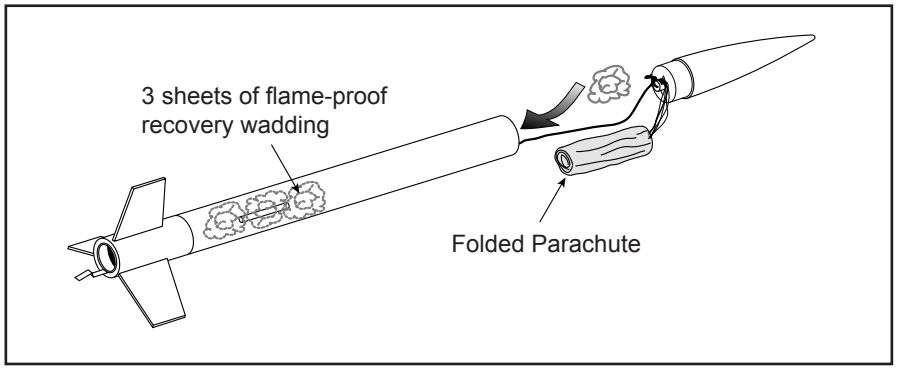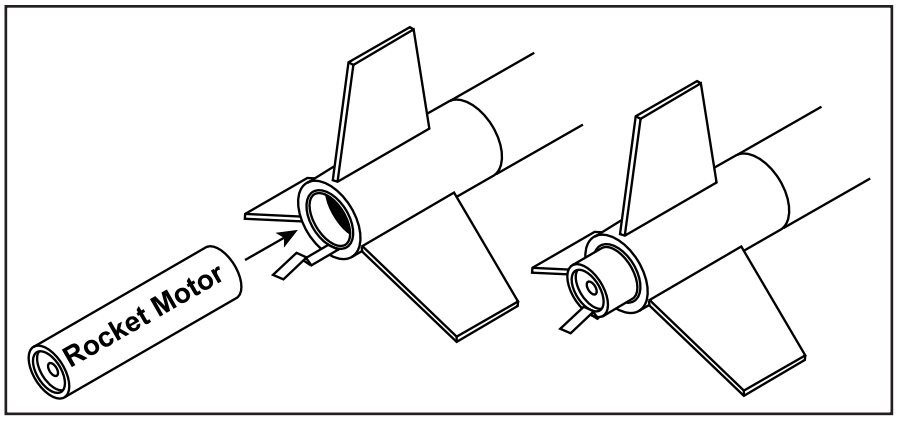
Motor Type	Produced by:	Estimated Altitude (feet)	Estimated Altitude (meters)
A8-3	Estes	242.5 ft	73.9 m
A6-4	Quest	215.6 ft	65.7 m
B4-4	Estes	621.4 ft	189.4 m
B6-4	Estes or Quest	660.0 ft	201.1 m
C6-5	Estes or Quest	1532.6 ft	467.1 m
D10-7	Aerotech	2887.6 ft	880.1 m