Kit #05030
Skill Level 4

Made In USA

Snarky Parts List

Item #	Item Name	Qty
10091	Engine Mount Tube (AT24-3.75)	1
10160	Airframe Tube (AT-56/18)	2
13031	Centering Ring (CR18-24)	1
13035	Centering Ring (CR24-29)	2
15025	Ring Set CR24-56	1
13056	Launch Lug (1/4" X 3")	1
24041	Regular Engine Hook	1
24042	E-Size Engine Hook	1
15534	Balsa Tail fins (sheet A)	1
15535	Balsa Wings (sheet B)	1
15538	Scoop Alignment Fixture (die-cut card)	2
19470	Plastic Nose Cone PNC-56A	1
29123	32" Parachute Pack	1
29520	300# Test Kevlar® Shock Cordv x 8ft	1
31060	Snarky Instruction Sheet A	1
31061	Snarky Instruction Sheet B	1
31062	Snarky Instruction Sheet C	1
37018	Snarky Scoop Cutting Guides Sheet	1
37019	Snarky Tube Marking Guide Sheet	1
41025	Snarky Printed Decal Sheet	1

Skill Level 4

Slightly Challenging

The Snarky is designed to look like an Air Force target drone - with attitude! That means its purpose is to mimic the flight of enemy airplanes, so that the Air Force can practice intercepting it. But this isn't a scale model. We designed it just for kicks, and to show you how much fun you really can have with rocketry.

The air-scoop on the bottom of the model is just one thing that makes this rocket kit unusual. It actually helps stabilize the rocket; you'll find that it flies straight as an arrow on every single launch.

Besides the air scoop, the fins are asymmetric. That means they aren't equally spaced around the rocket like they are on other kits. The combination of the scoop and the asymmetric fins plus the large size of this kit is what makes it stand out among all the other rockets at the flying range.

Needed Tools and Materials

- ☐ Hobby Knife with Sharp Blades
- ☐ Ruler
- ☐ Wood Glue (recommended) or White Glue
- ☐ Sand Paper 200 grit, 400grit and Sanding Block
- ☐ Masking Tape
- ☐ Pencil
- ☐ Scissors
- ☐ Paper Towel
- ☐ Wood Dowel

Optional Tools / Finishing Supplies

- ☐ 24mm Spent Engine casing to insert engine block
- ☐ Aluminum "angle" to draw lines on the tube
- ☐ Paint Supplies: (Spray Paint, Brushes, etc)
- ☐ Plastic Sheet (to cover the work surface)
- ☐ Safety Glasses (For general protection while building)
- ☐ Super Glue (CyA Adhesive medium viscosity)
- ☐ Wood Sealer/Sanding Sealer

DYNA STAR
Mid-Power Rockets
Manufactured in the USA by:
Apogee Components Inc.
Colorado Springs, Colorado, USA
Visit us online at:
www.ApogeeRockets.com

Sheet A P/N 31060 Last Updated 4/19/2019

Assembly Steps

☐ 1. Using 400 grit sandpaper, fine sand both of the balsa sheets before removing the fins. Carefully remove all the pieces from the balsa sheet by freeing the edges with a sharp hobby knife.

☐ 2. Group the like fins together, and gently sand the edges as shown in the illustration.

☐ 3. The main wing and the vertical tail fin of the Snarky are made by joining the balsa pieces together as shown. Place the pieces on a sheet of plastic when gluing them together so they don't stick to your work table as they dry. Use wood glue, and perform this step to make the left and right side wings, then build the vertical tail.

☐ 4. You can apply sanding sealer to the surfaces of all the balsa tail pieces and wings. Coat both sides at the same time to minimize the chances of warping. Do not allow the sanding sealer to get on the root edge of the parts. This could prevent the pieces from bonding well to the body tube when glued on later. Set them aside to dry completely. When they're dry, sand the sealer smooth until you get a desirable surface finish. You may need to repeat this step several times depending on the level of quality you wish to achieve.

☐ 5**. Install your preferred engine hook:**
Regular "D" Engine Hook: Mark the body tube 1/2" (13mm) and then 2-1/4" (57mm) from one end as shown.
E Engine Hook: Mark the body tube 1/2" (13mm) and then 3-1/4" (83mm) from one end as shown.

☐ 6. Using a hobby knife, make a 1/8" (3mm) long cut in the body tube at the (2-1/4" or 3-1/4") line you drew in the previous step.

☐ 7. Insert the correct engine hook into the slit. Place wood glue on the end of a wooden dowel or Q-Tip and smear glue around the inside of the motor mount tube just ahead of the engine hook. Slide the small green engine block ring inside the motor tube, and press it through the glue and up against the tip of the engine hook.

☐ 8. Take one of the large cardstock centering rings and one of the green centering rings and slide them both over the forward end of the motor mount tube as shown. Apply a bead of wood glue around the engine mount tube (at the 1/2" 13 mm mark you made in **Step 5**) and then add another bead of glue at about 1/2" behind the first. Slide both rings into place as shown.

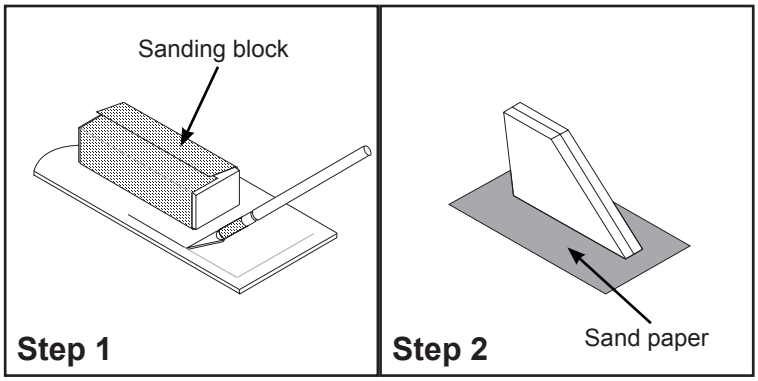

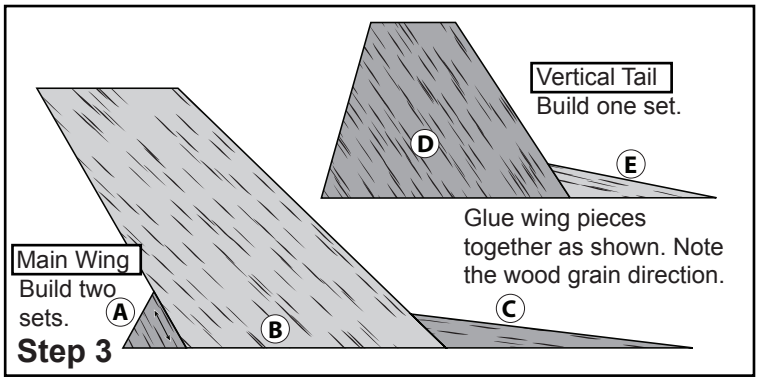

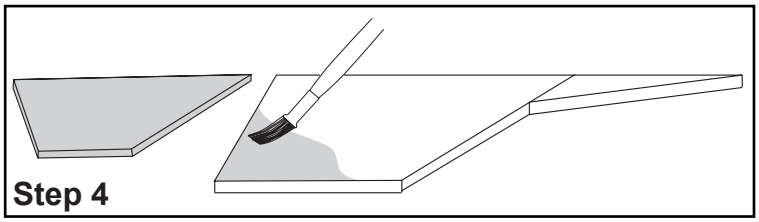

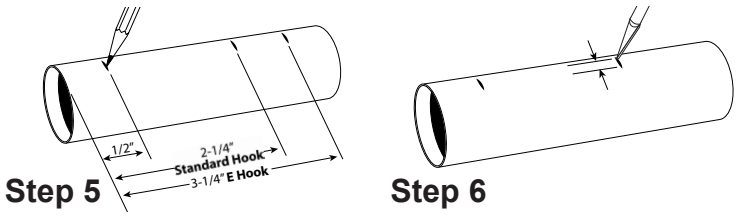

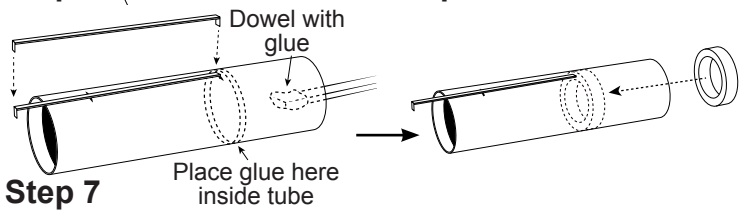

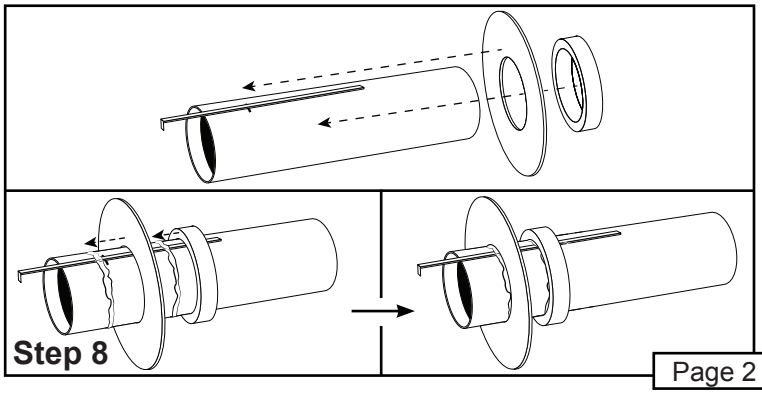

☐ 9. Grab the other green centering ring and cut a small notch on the inside with a hobby knife.

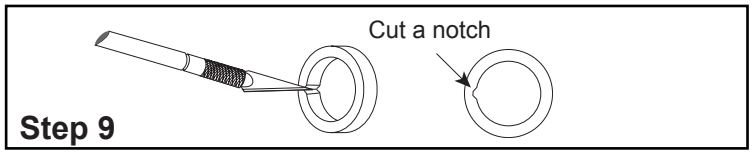

☐ 10. Mark a pencil line on the front of the engine mount tube 1/2" (12mm) from the end; In the E engine hook case, market directly in front of the engine hook slot. Tie the yellow Kevlar® shock cord around the front end of the engine mount tube. Slide the green ring over the shock cord and onto the tube. The shock cord should fit into the notch on the inside of the ring. Pull the cord tight up against the ring. Glue the ring in place, so that the edge lines up with the pencil mark as shown.

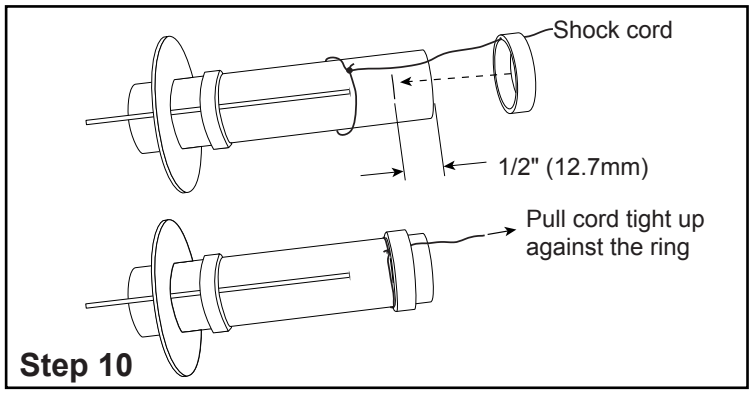

☐ 11. Cut a notch in the inside of the remaining card-stock centering ring with your hobby knife. Slide this ring over the shock cord, and glue it against the front green ring on the engine mount tube. The shock cord should nest inside the notch so the ring fits easily over the tube.

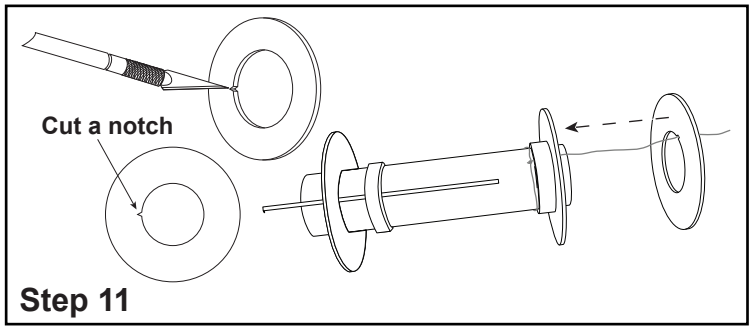

☐ 12. After the glue on the engine mount is dry, put a fillet of glue on each side of both of the centering rings. These rings take a lot of stress at engine ejection, and you must make sure to have a good glue bond. When the glue is dry, test fit the assembly into the large body tube. Sand the edges if the fit is tight.

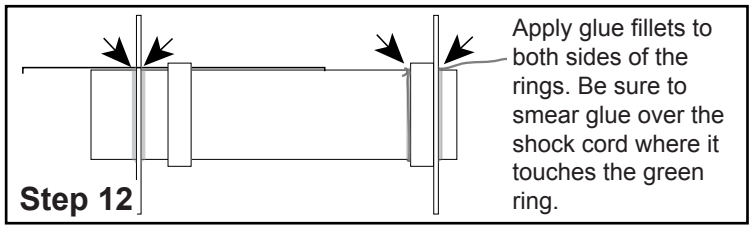

☐ 13. Reverse the direction of the shock cord so that it comes out of the aft end of the engine mount tube as shown. Apply wood glue about 3" inside one of the body tubes using a scrap piece of wood or a dowel. Immediately insert the engine mount assembly into the body tube, and push with one FAST and SMOOTH motion until the aft end of the engine mount tube sticks out about 1/2" (13 mm) as shown. Apply additional wood glue to the exposed centering ring/body tube. Wipe away excess glue with your finger. You can now feed the zzshock cord back through the body tube.

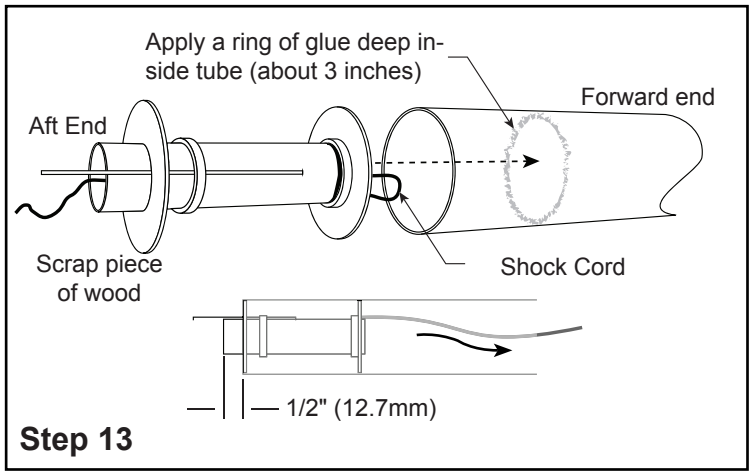

☐ 14. Cut out the **Main Tube Marking Guide**. Wrap the guide around the aft end of the large white body tube from the previous step and tape the ends of the marking guide together. On the body tube mark a small line at each of the arrow points and label as indicated on the marking guide and then remove.

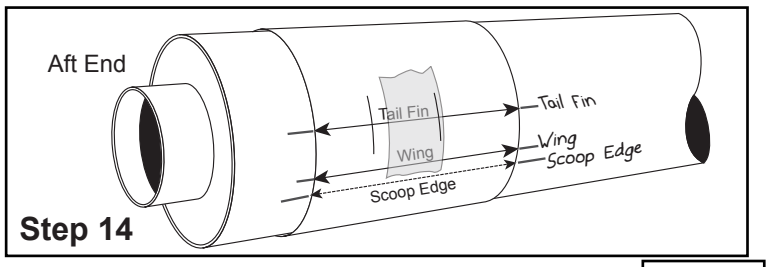

☐ 15. Using a metal angle tool (a door frame will work, but it is not recommended on large diameter tubes), draw a pencil line down the outside of the body tube at each pencil mark.

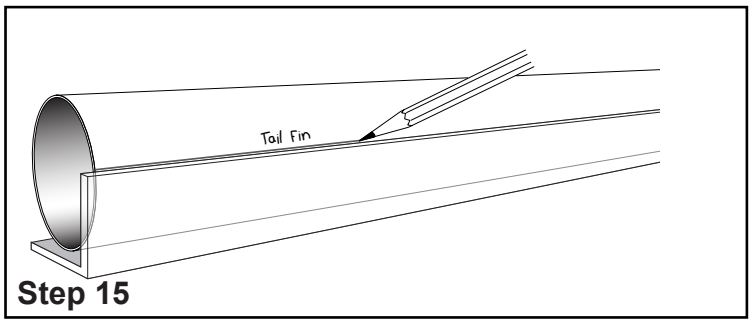

☐ 16. Cut out the **Scoop Tube Marking Guide**. Grab the remaining unmarked body tube, wrap the guide around the tube, and mark at each arrow point. Then draw a line down the entire length of the tube using the aluminum angle tool. Don't forget to write on the tube what each line is used for.

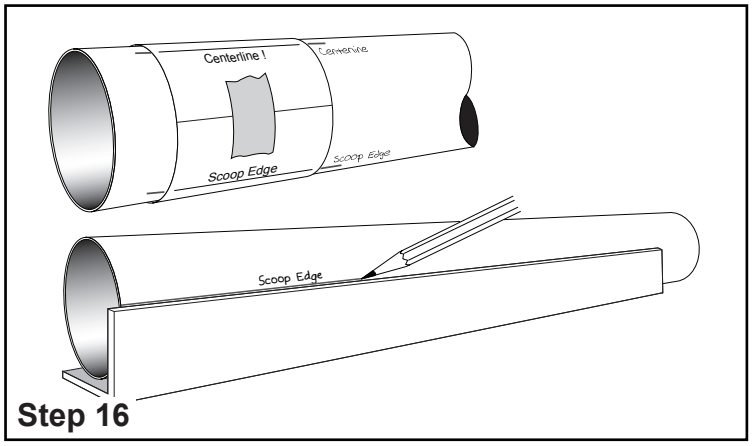

☐ 17. Using a hobby knife and the straight edge on your ruler, carefully cut out the **Scoop Cutting Guides** from the pattern sheet.

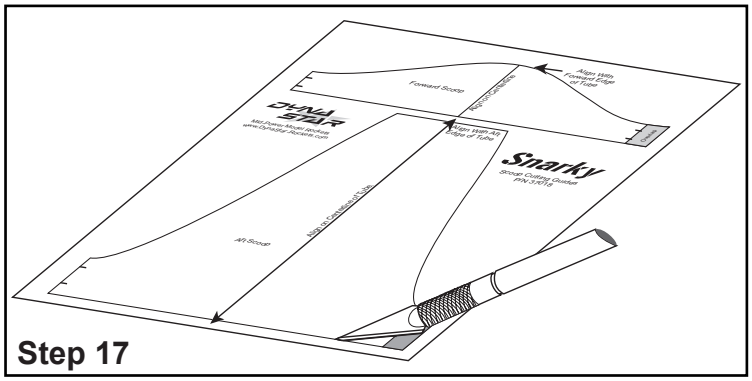

☐ 18. Wrap the **Aft Scoop Cutting Guide** around one end of the same tube. Make sure the centerline on the guide is aligned with the "centerline" on the tube. Slide it until the flat edge of the cutting guide is flush with the end of the tube. When it is positioned correctly, tape it down so it can't slide around. Taking your pencil, trace around the edge of the curved part of the guide as shown. You may now remove the paper guide.

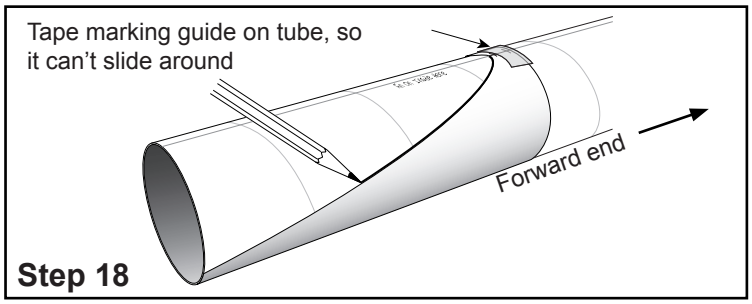

☐ 19. On the opposite end of the tube, use the **Forward Scoop Cutting Guide** and follow the same procedure as in the previous step. Position the guide, tape it into place, and mark the forward edge of the tube.

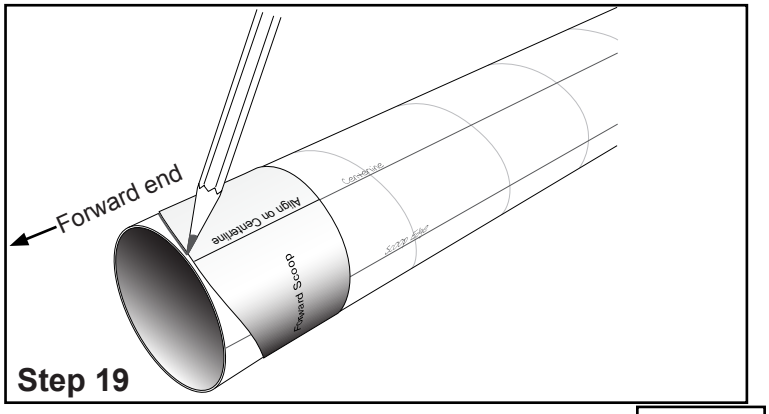

☐ 20. Using a very sharp hobby knife, carefully cut along both sides of the scoop tube as shown. Work slowly! Do NOT try to cut through the tube in a single pass. Make several light cuts first to be sure that your blade does not stray from the line.

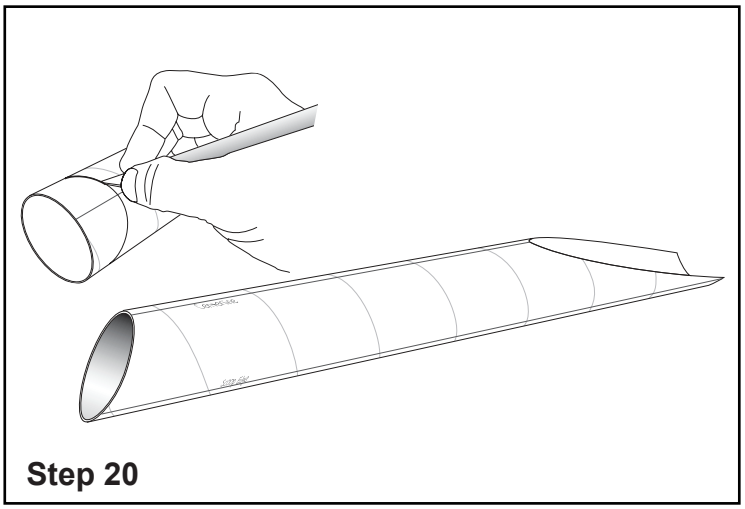

☐ 21. Clean up the edges of the tube by sanding them with 200 grit sandpaper as shown. The edges look better when they are smooth and flat.

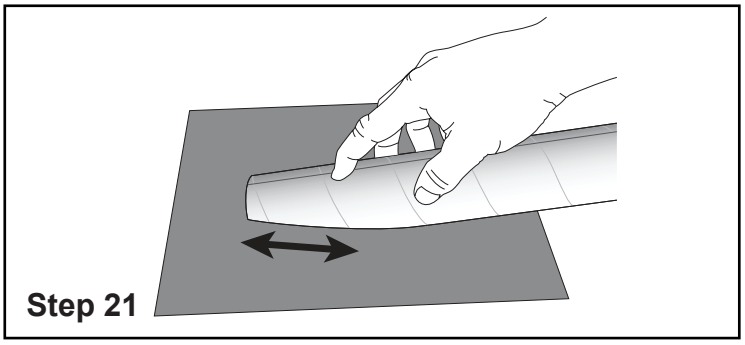

☐ 22. NOTE: This is the most difficult step of the entire assembly sequence. Take your time. Lay the tube back into the aluminum angle. Score gently on the lines marked “Scoop Edge” with a very sharp hobby knife. Score the lines on both sides of the tube before cutting all the way through the wall. Otherwise, it is difficult to cut a straight edge; the tube will wiggle very much, making cutting difficult.

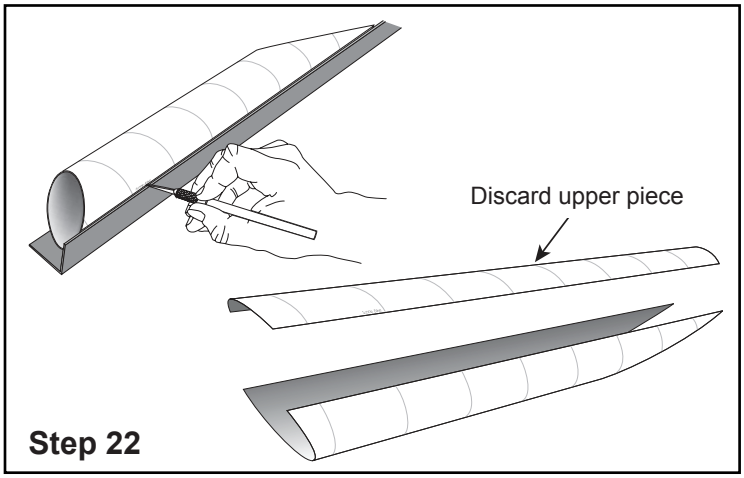

☐ 23. Smooth out and clean up the edges of the tube using a sanding block and 200 grit sandpaper. Be careful at the pointy end of the tube, as it can be bent easily if you are too rough with the sanding block.

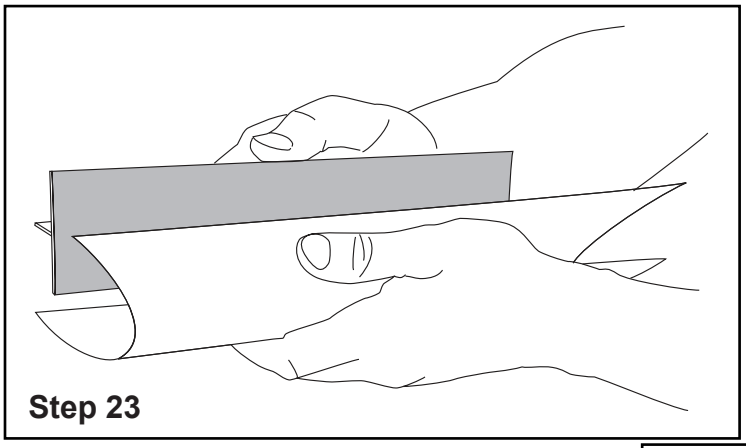

☐ 24. Slide the **Scoop Alignment Fixtures** (cardboard pieces) over the main body tube. Position them about 1/3 of the way from each end on the tube as shown.

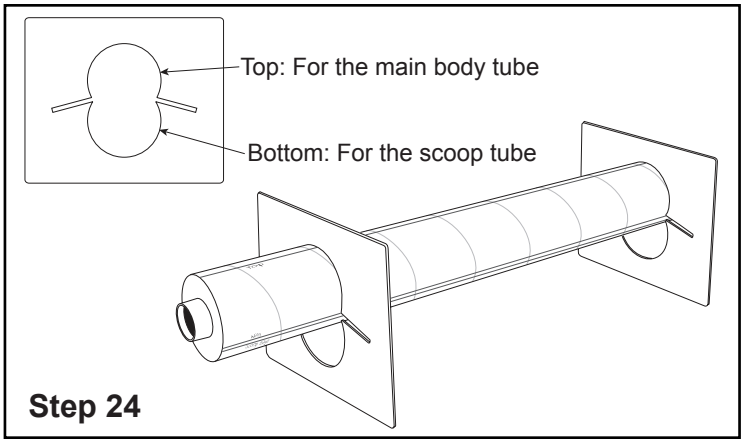

☐ 25. Slide the scoop tube into the alignment fixtures. The aft end of the scoop tube is positioned flush with the end of the main tube. Now rotate the main tube so the lines on the tube labeled “Scoop Edge” touch the actual edges of the scoop tube.

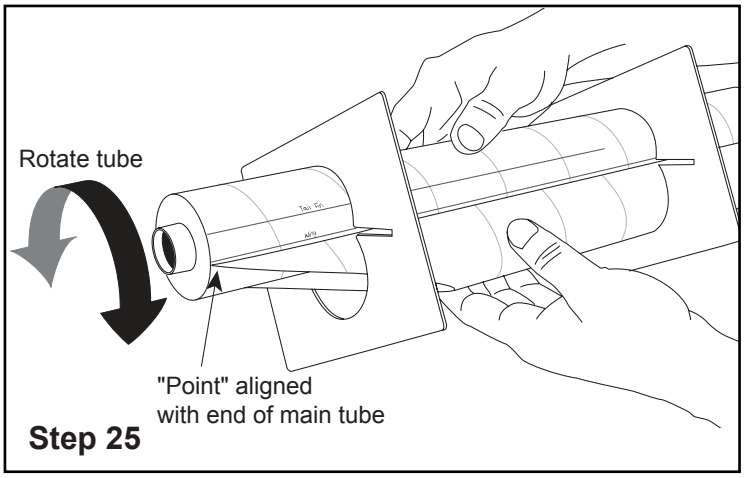

☐ 26. Carefully lay a very thin bead of wood glue along the joint where the scoop tube meets the main tube. You may have to slide the alignment fixtures as you apply the glue. Make sure the alignment fixtures are not accidentally glued to the model. Allow the glue to dry before proceeding to the next step.

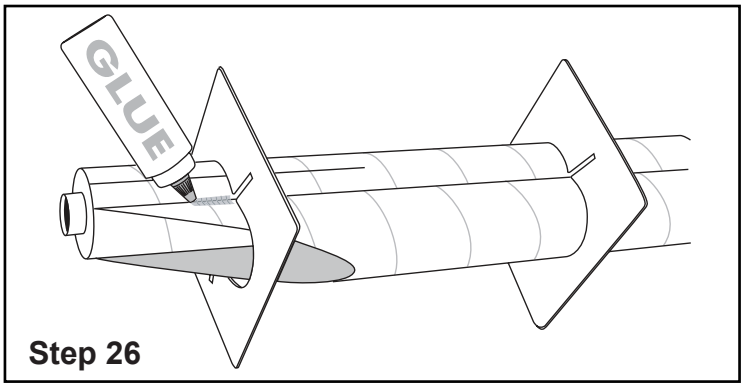

☐ 27. Apply a very thin layer of glue to the root edge of one of the large wings. Allow the glue to dry slightly for three minutes, and then slip it into the slots of the alignment fixture as shown. The aft edge of the wing is positioned 5" (12.7 cm) from the aft end of the tube. Press the root edge of the wing tightly against the tube, and hold it in position until the glue sets. Repeat this step for the other wing. When the glue is dry, remove the alignment fixtures.

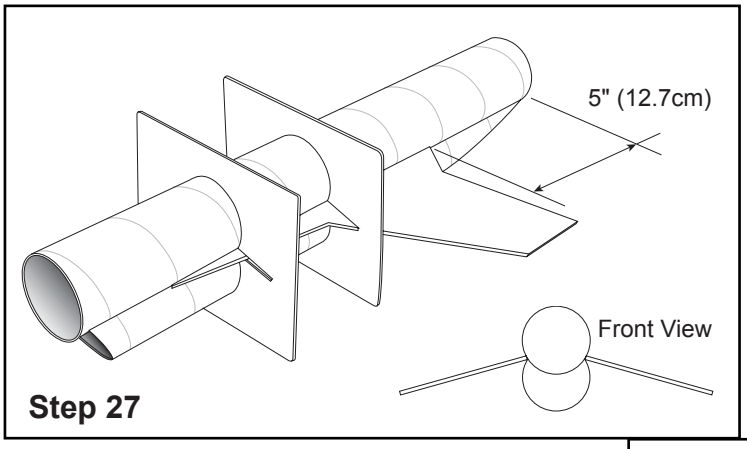

☐ 28. Apply a thin layer of glue to the root edge of the vertical tail fin. Allow the glue to dry slightly for approximately 3 minutes, and then attach it to the line marked vertical tail on the top of the main tube. The fin is attached so that it is flush with the end of the tube. Make sure the fin is straight along the tube. Allow the fin to dry before proceeding with the horizontal tail fins. Repeat this basic procedure two more times as you attach the horizontal tail fins.

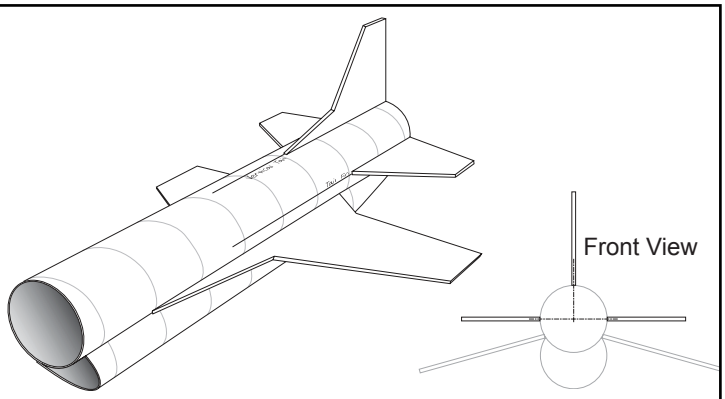

Step 28

☐ 29. Test fit the bottom fin inside the scoop tube. The corner is positioned just inside the scoop tube's curved edge. Sand the edge slightly if it is too tight. When it just slips in, glue it in place using carpenter's wood glue.

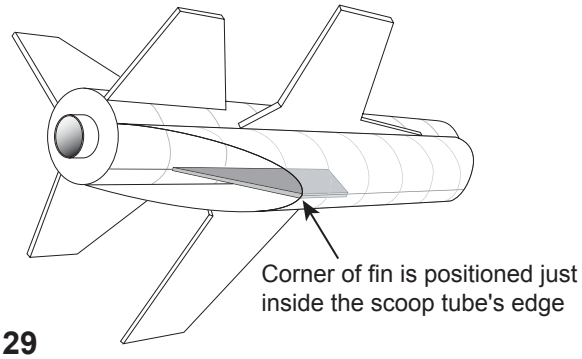

Step 29

☐ 30. Apply a bead of wood glue to both sides of each fin-body tube joint. Pull your finger along the joint to smooth out and remove the excess glue. Lay the tube horizontally while the glue dries.

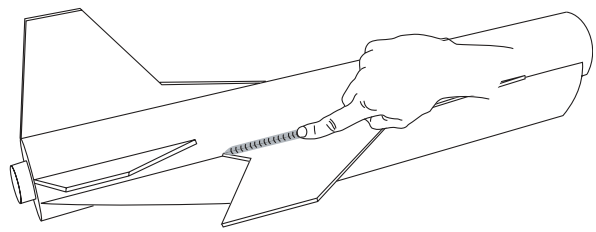

Step 30

☐ 31. Using wood glue, attach the launch lug to the tube, inside the scoop tube; position it 6" (15.2 cm) from the aft end of the tube. Allow the glue to dry.

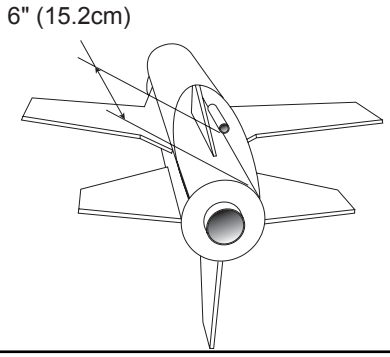

Step 31

☐ 32. Test fit the nose cone onto the front end of the rocket. You may need to apply two or three layers of masking tape to make the fit snug. When applying the masking tape, leave a slight gap between the edge of the nose portion and the edge of the tape.

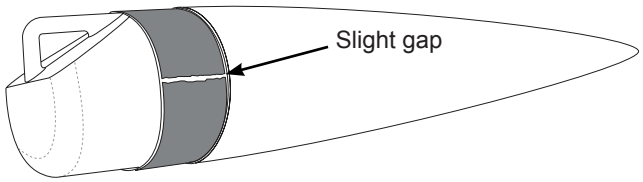

Step 32

☐ 33. Tie the loose end of the shock cord to the loop on the base of the nose cone using two overhand knots. Apply a little bit of wood glue onto the knot to keep it from coming untied.

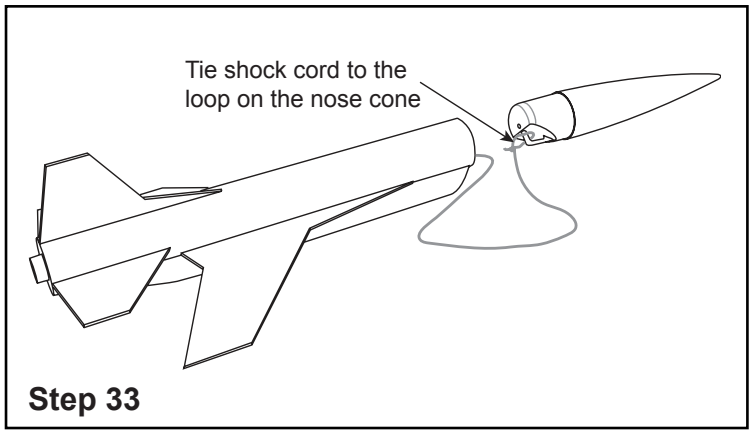

Step 33

Parachute Assembly

☐ 34. Carefully cut out the parachute canopy along the dashed lines. Place one reinforcement ring on each of the marked corners. Take a sharp pencil or hobby knife and poke a hole through the plastic in the center of each ring.

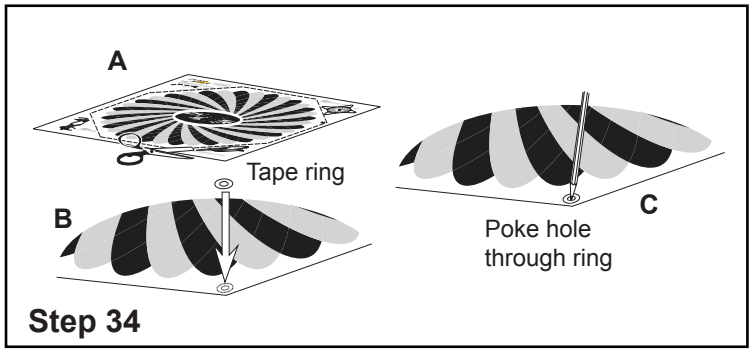

Step 34

☐ 35. Fold the shroud line in half, and cut at the fold to make equal lengths; cut each piece in half again to make a total of four lines of equal length.

☐ 36. Pull each parachute line end through a parachute reinforcement ring and tie using two overhand knots. Repeat for all the corners as shown.

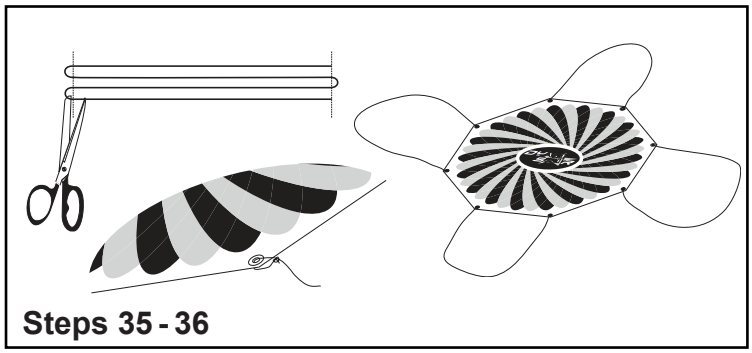
Steps 35 - 36

☐ 37. Holding the parachute at the center of its top, pull the lines together to even up the ends. Thread the 4 looped lines through the loop at the base of the nose cone. Take the top of the parachute and pull it through all 4 string loops at the same time and then pull to tighten the knot. This securely attaches the parachute to the rocket.

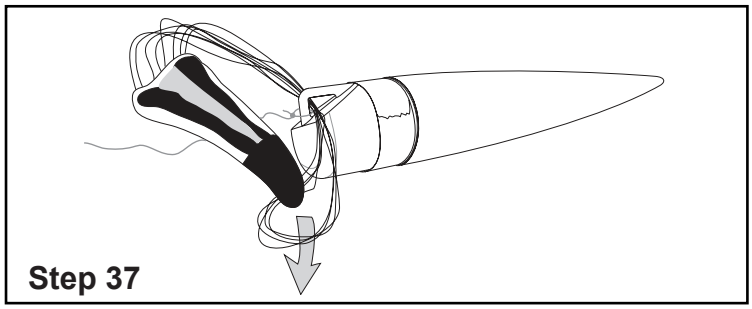
Step 37

Painting the Snarky

☐ 38. Roll a piece of paper and insert it into the aft end of the body tube so you can hold the model while painting it. For best results, paint the model with primer before using the final paint colors. Follow the directions on the paint can, and always paint outdoors with the wind against your back. Start by painting the entire rocket white. When the paint has dried for 24 hours, mask off and paint the nose cone tip and the underside of the scoop tube red (use image in Step 39, Page 9 for reference).

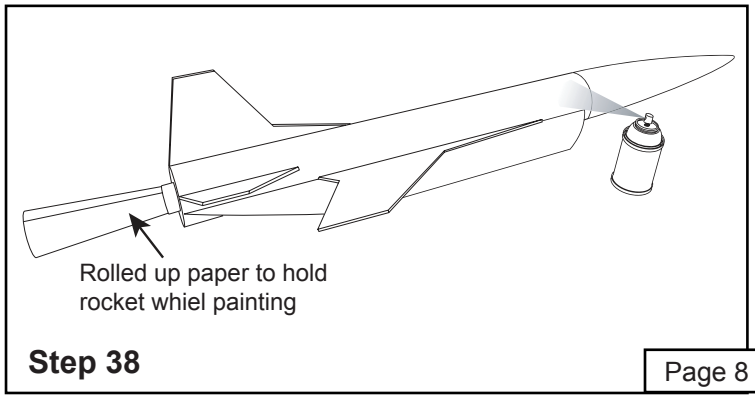

Step 38

☐ 39. Before applying the decals, let the paint harden at least 24 hours. Cut around the perimeter of the decal with a pair of scissors. Peel off the paper backing, and affix the decal in place on the model. Use the picture on this page for decal placement.

☐ 40. Congratulations! Your Snarky Aerial Target Drone rocket kit is now complete.

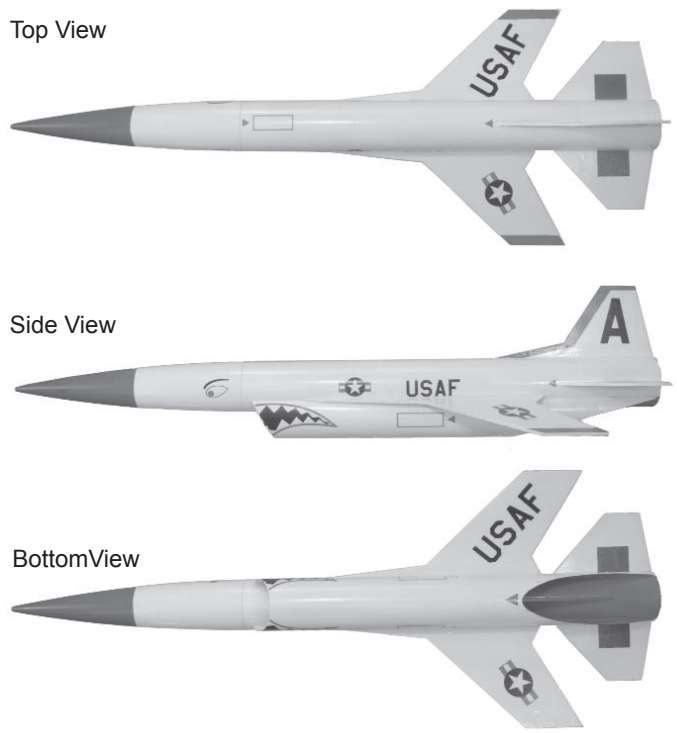

Step 39

Launch Supplies Needed

To launch your rocket you will need the following supplies:

- A model rocket launching system.
- Flame resistant recovery wadding.
- Recommended 24mm Diameter Rocket Engines, see the motor matrix below.

Motor	Manufacturer	Est. Altitude	
		Ft	m
C11-3	Estes	181	55.2
D12-5	Estes	395	120.5
E6-4	Apogee	1090	332.4
E9-4	Estes	796	242.7
E15-4	Aerotech	994	303.1
E30-4	Aerotech	929	288.7
F24-7	Aerotech	1228	374

Rocket Preflight

☐ A. Loosely crumple and insert 8 sheets of recovery wadding into the body tube.

☐ B. Carefully fold the parachute and insert it into the tube with the shock cord. Then install the payload section into place.

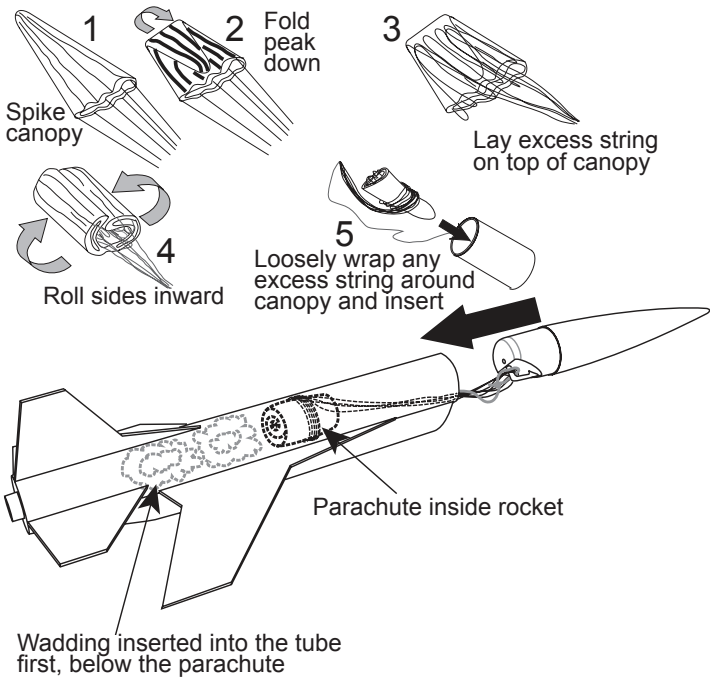

Steps A - B

☐ C. Fully insert the motor into the motor mount tube hooking it into place with the engine hook.

☐ D. Insert and secure the engine igniter as directed on the package the engines came with.

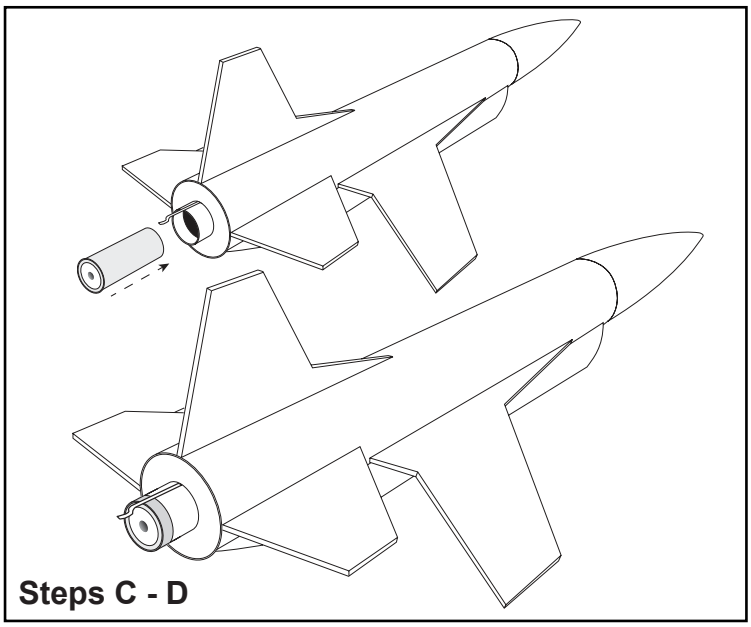

Countdown and Launch Procedure

Fly your rocket on a large field that isn't near any power lines, trees, or low flying aircraft. The larger the field, the greater your chances of recovering your rocket. The launch area around the pad must be free of dry weeds and brown grass. Launch only during calm weather with very little or no wind and good visibility. Always use a launch pad that includes a blast deflector.

10. Remove the safety key from the launch controller
9. Slide the launch lugs over the launch rod to place the rocket on the pad. The rocket should slide freely over the rod.
8. Attach the micro-clips to the igniter. The clips must not touch the other or the metal blast deflector.
7. Stand back from your rocket as far as the launch wire allows (at least 5 meters - 15 feet).
6. Insert the safety key to arm the launch system. The light (or buzzer) on the controller should come on.

Give a loud countdown 5 ... 4 ... 3 ... 2 ... 1 ... LAUNCH!

Push and hold the button until the engine ignites. Then remove the safety key and place the safety cap on the launch rod.

Occasionally the igniter will burn, but the motor will fail to ignite. If this happens, the cause is that the pyrogen on the igniter was not in contact with the engines propellant. When an ignition failure occurs, remove the safety key from the launch controller and wait 60 seconds before approaching the rocket. Remove the old igniter from the engine and install a new one. Make sure that the igniter is inserted fully into the engine and touches the propellant. Secure the igniter as directed on the engine package and repeat the countdown and launch procedure. Always follow the NATIONAL ASSOCIATION OF ROCKETRY Model Rocket Safety Code when launching model rockets.

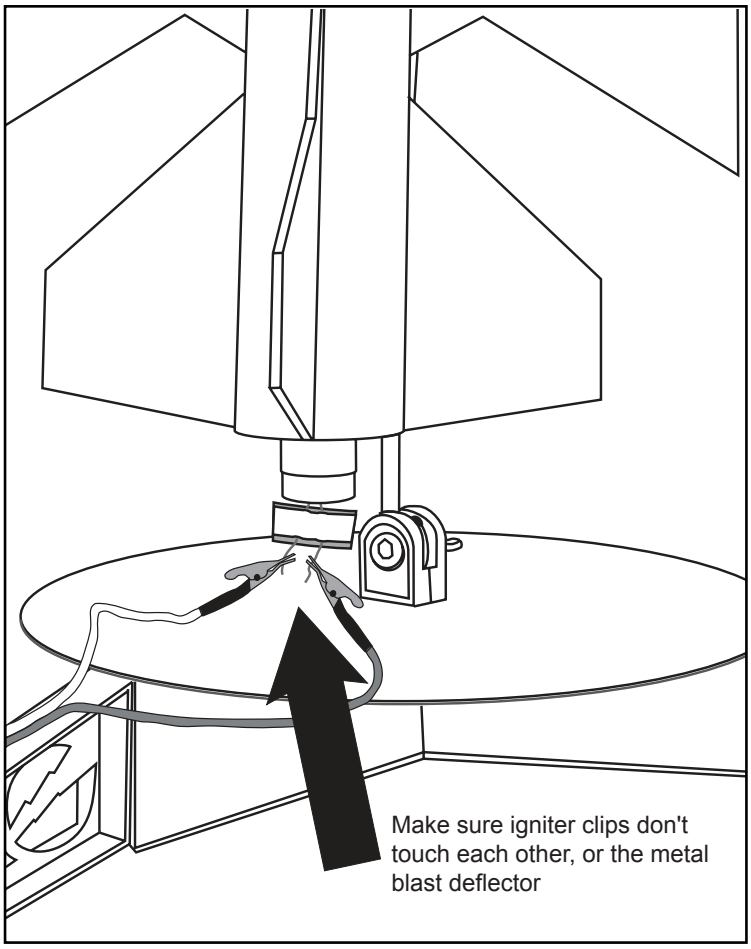

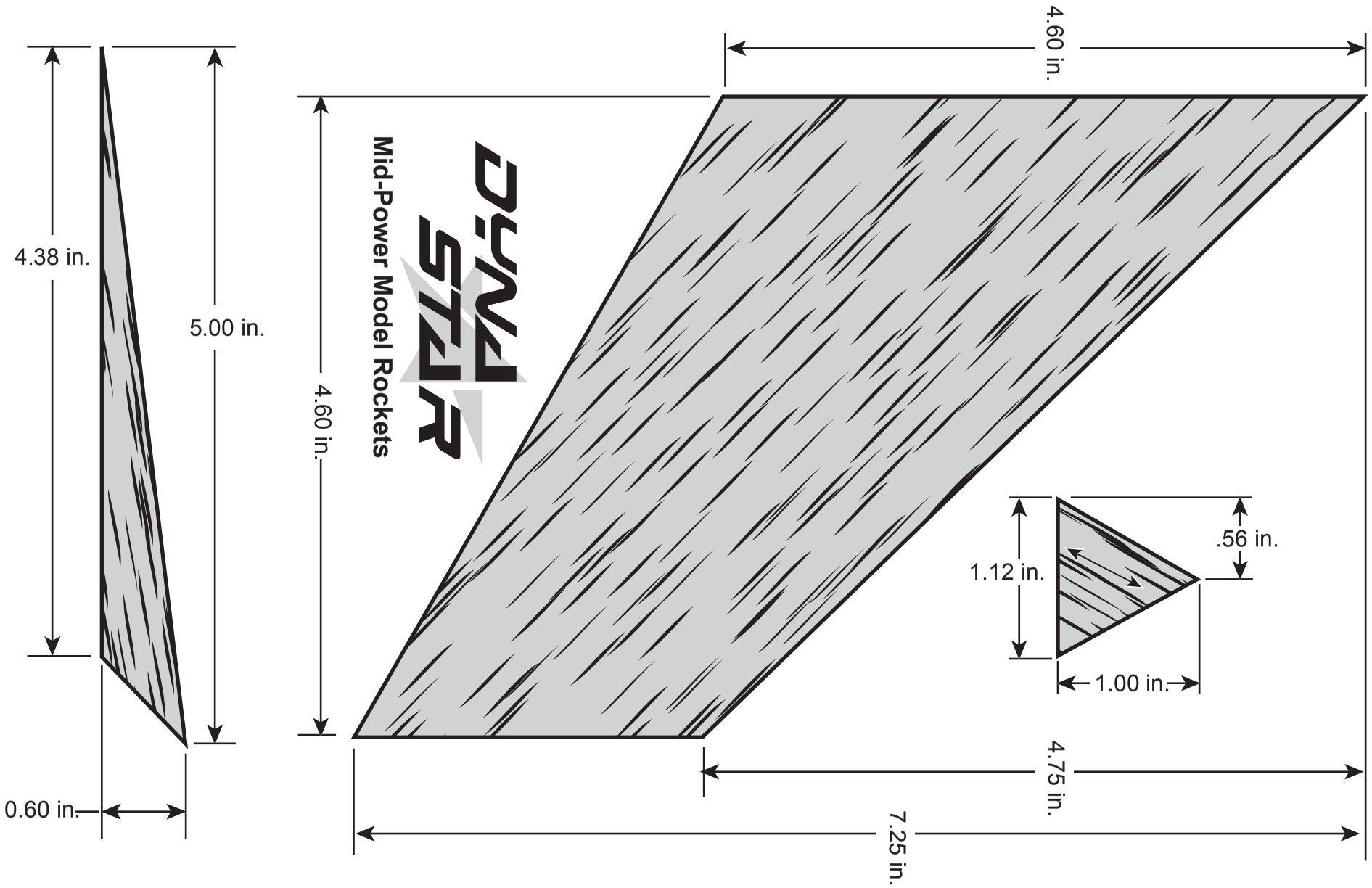

Snarky Aerial Target Drone Wing Templates

Use these templates to make replacements, in case you break one off. Use 1/8" (3mm) thick balsa wood.

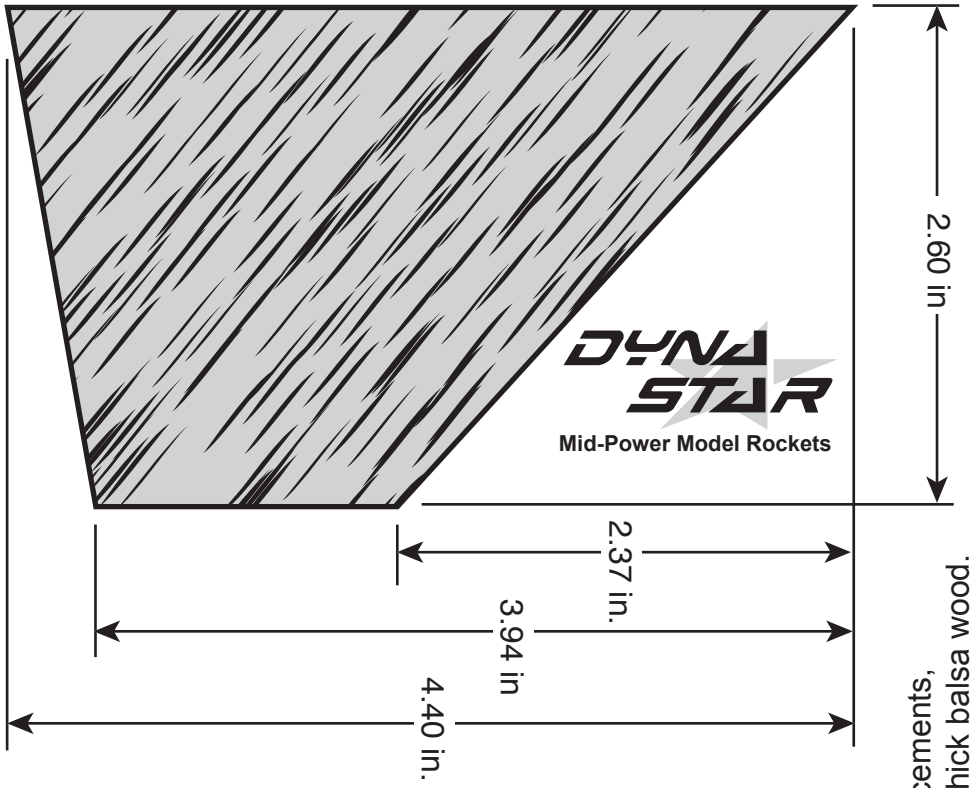

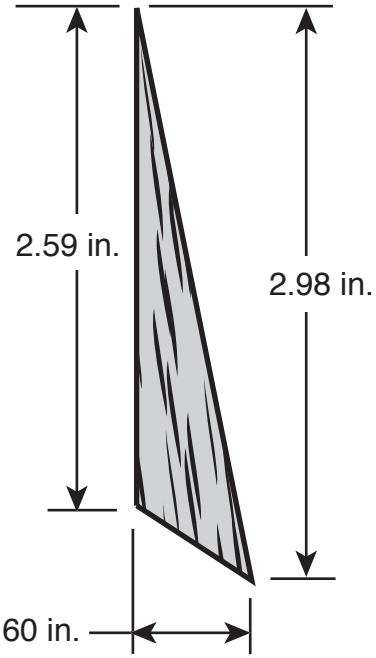

Snarky Aerial Target Drone Fin Templates
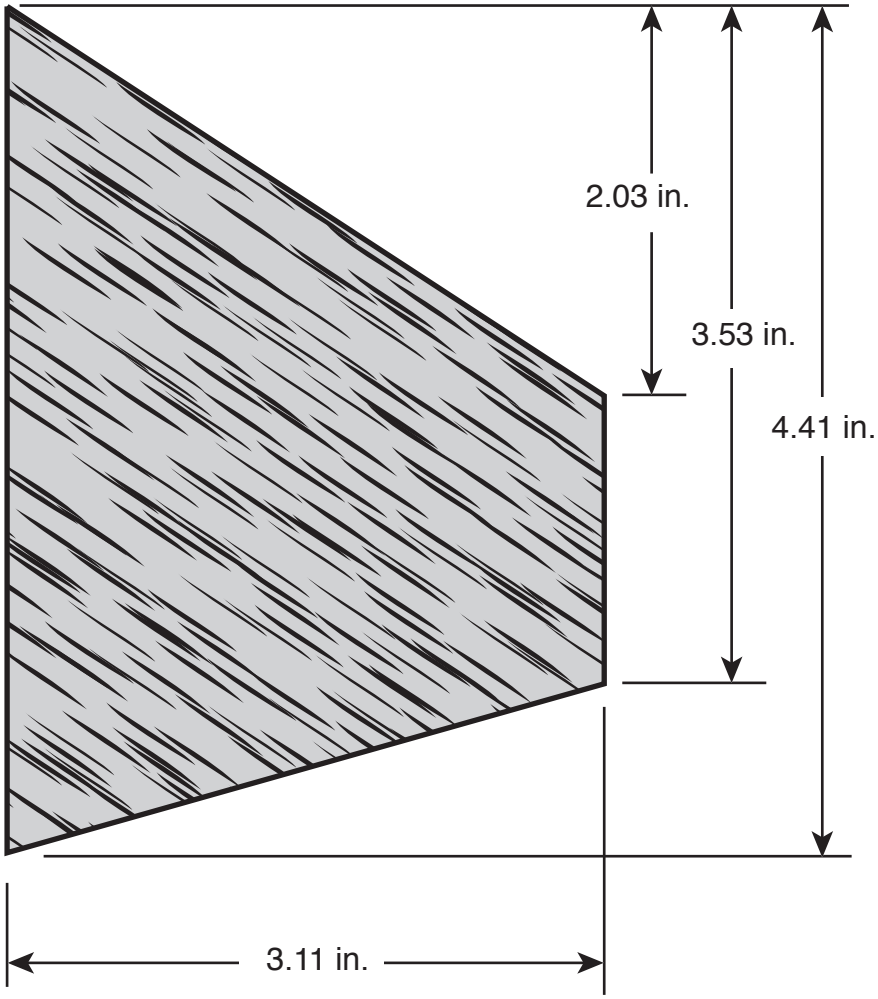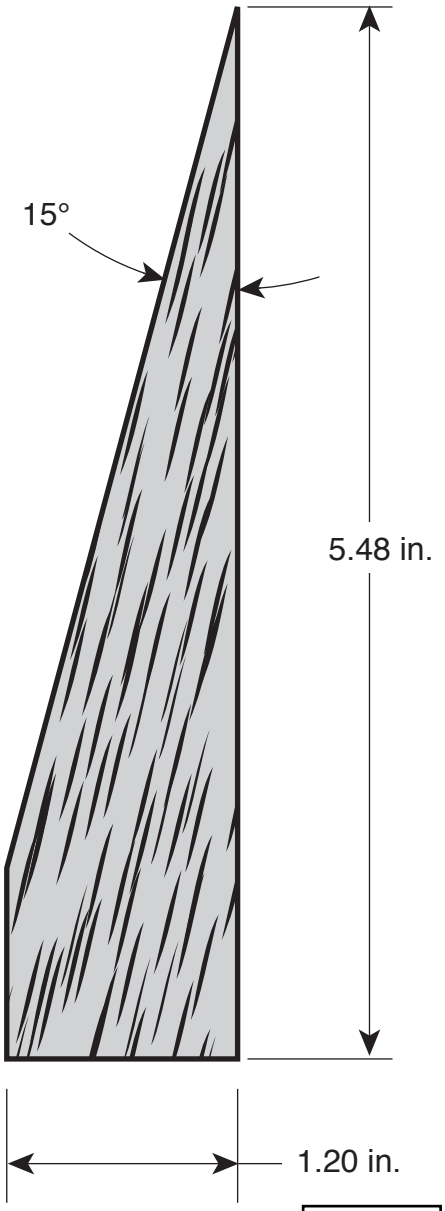
Use these templates to make replacements, in case you break one off. Use 1/8" (3mm) thick balsa wood.