The Development of Lightweight Airframe Components From Drafting Vellum and Mylar Film

–By–

Andrew D. Tomasch

NAR 39741

Submitted to the Research and Development Competition at NARAM 40

August 1998

The Development of Lightweight Airframe Components From Drafting Vellum and Mylar Film

Summary

Lightweight components have been developed for high-performance spacemodels flown in duration competition. These components (tubing, transitions, conical nose cones, and conical shrouds) are constructed from drafting film (vellum or mylar) and mylar tape. They exhibit excellent strength at substantially reduced weight when compared with traditional cardboard, balsa, or plastic components. The initial development was undertaken to produce lightweight FAI class S3 A (2.5 N-s parachute duration) and S6 A (2.5 N-s streamer duration) models without the use of fiberglass and at competitive weights. This effort has been successful, producing models comparable in weight to those with fiberglass airframes, and with excellent strength. Subsequently, these components have been incorporated into NAR duration models (streamer, parachute, and egg loft) in impulse classes ranging from 1/4 A to D, all with complete success. Numerous places won in NAR competition over the last five years have proven the value of these construction techniques. To date, no component has failed structurally during flight. This method of construction has the additional advantages of moderate cost, readily available materials, and simple, rapid assembly. The original goal of competing in the US spacemodeling team trials using vellum models for S3 A and S6 A was achieved in 1997, with a best placing of sixth in S3 A. These construction techniques are well proven and provide an excellent competitive advantage for low-impulse duration events. The most important overall finding is that traditional model rocket construction materials produce models which are grossly over built with respect to the loads encountered in flight, and that a factor of two weight saving is possible for small models. The weight saved provides increased duration due to both the reduced airframe weight suspended from the recovery device, and the increased recovery device area possible for a given total weight at liftoff.

Introduction

Lightweight models for the FAI classes S3 A (2.5 N-s parachute duration) and S6 A (2.5 N-s streamer duration) were first developed in 1991, to meet the need for simple competitive models which could be built quickly for use in the upcoming US team trials. A detailed account of this early development work has been published[1] and is submitted *for judging* in Appendix A, along with the following sections which are included to supplement and update the contents of this original publication.

Materials and Methods

Three basic materials have been employed in the construction of lightweight airframe components:

1. Drafting Vellum.
2. Mylar Drafting Film. This can be clear, fogged on one side or fogged on both sides. I prefer at least one fogged side, since ink better adheres to the fogged surface.
3. Scotch Magic Transparent mylar tape.

Table I reports thickness and mass densities (per unit area) for these materials. All masses were measured on a digital scale with a 200 gram full scale and 0.01 gram least count. Thickness were obtained with a precision dial caliper accurate to 0.0003". The last reported decimal place has been rounded.

TABLE I: MATERIAL PROPERTIES

Material	Thickness (Inches)	Mass Density (g/cm^2)
16 lb. Vellum	0.003	0.006
Mylar Graphics Film	0.004	0.012
Scotch Magic Tape	0.002	0.008

These basic materials can be used to fashion a variety of lightweight airframe components: tubing, conical transitions, conical nose cones, and long conical shrouds for egg lofters. The egg-lofter shrouds can be fully structural, taking all flight loads without additional internal structure for classes up to C (10 N-s), and can also be used for supplemental streamlining in larger impulse classes such as D egg loft duration. The construction methods are simple and straightforward. A brief summary of the construction techniques is given below.

Tubing: A rectangular blank is produced with any desired graphics (e.g. NAR number) pre-printed, using a digital plotter and india ink, or an ink-jet printer. The blank includes additional width for the seam overlap, typically 3/16". Scotch Magic Transparent Tape is applied along one edge so that half of its width extends beyond the blank. The tape is trimmed flush with each end of the blank, and the blank is rolled into a tube around a piece of commercial tubing of the desired diameter (e.g. 13 mm Blackshaft for 13 mm tubes). For 30 mm FAI S3 and S6 tubing, a suitable 30 mm form must be made or obtained. The seam, which runs parallel to the tube axis with the tape on the exterior of the tube, serves as a stiffening rib, adding further strength.

Conical Transitions, Nose Cones, and Shrouds: Blanks are laid out using published[2] formulas for conical transitions. The blanks are then rolled into finished conical parts, but without the use of a form. Nose cones have a conical balsa tip which has been shaped in an electric pencil sharpener.

For most applications, vellum has proven to be structurally adequate. For some high stress applications (e.g. C egg loft shrouds) mylar is substituted where for extra strength, provided the factor of two additional mass per unit area is not a significant penalty within the context of the overall weight budget. To date, no component, vellum or mylar, has failed under flight loads.

Weight Savings

Table II compares the linear mass density for vellum and mylar based tubing with that for various types of commercial tubing. These data are useful for making detailed "weight budget" estimates prior to construction.

TABLE II: LINEAR MASS DENSITY FOR TUBING

Tubing	Linear Mass Density (g/cm)
Totally Tubular 18 mm Dia. White Paper	0.186
Apogee 18 mm Dia. Phenolic	0.177
Estes 18 mm Kraft Paper	0.171
Mylar 18 mm Dia.	0.087
Vellum 18 mm Dia.	0.048
Apoggee Blackshaft Phenolic 13 mm Dia.	0.130
Totally Tubular 13 mm Dia. White Paper	0.124
Mylar 13 mm Dia.	0.070
Vellum 13 mm Dia.	0.040
Totally Tubular 10.5 mm Dia. White Paper	0.114
Vellum 10.5 mm Dia.	0.033

Taking the 13 mm diameter as an example, mylar tubing is only 54% as massive as phenolic, and vellum is only 31% as massive for a given length of tubing. When compared to white paper tubing mylar is 56% as massive, and vellum 32%. These represent excellent weight savings, which are a particular advantage for low-impulse duration classes. As an example, consider the weight savings achieved by substituting an 8" long 10.5 mm diameter vellum tube for the equivalent length of white paper tubing in a 1/4 A PD model. The difference in mass is (8")(2.54 cm/in)(0.114-0.033(g/cm))= 1.65 grams. This can be compared with an overall mass of 1.61 grams for the 1/4 A PD model shown in Photo 7. Substitution of white paper tubing for vellum tubing would approximately ***double*** the overall mass of the model.

Finish

A major advantage of this construction is that graphics can be applied to the component blank prior to rolling the part to final shape and joining the seam. To date, a digital plotter driving a rapidograph pen charged with India ink, and an ink-jet printer

have both been used to print the blanks, with the required NAR number also drawn on the blank. The blanks were laid out using AUTOCAD mechanical design software, although any computer drawing program could be used. India ink is particularly well suited for this application, since it is highly water resistant, is difficult to smear, and can have clear aircraft dope applied over it, without bleeding, for additional water resistance. If an ink-jet printer is employed, a fixative must be applied immediately after printing the blank, since the ink-jet ink smears easily. Excellent success has been obtained using Krylon brand spray matte finish. A light application over the fresh ink sets quickly and eliminates smearing. It also provides sufficient finish to vellum parts, which then require no further doping for water resistance. The mylar drawing film is essentially waterproof and requires no additional finish other than that required to fix the graphics. The use of a "paint" type computer program should allow color graphic decorations to be ink-jet printed on the blanks with minimal additional weight. Laser printed blanks should also be possible.

Cost

The prices for vellum and mylar film as of July 1, 1998 are:

Vellum: \$9.66 + Tax for 100 8 1/2 × 11" sheets of 16 lb drafting vellum.

Mylar Film: \$33.68 + Tax for 100 8 1/2 × 11" sheets of mylar graphics film (fogged both sides).

These prices were quoted by Dunn Blueprint[3] of Ann Arbor MI. The 100 sheet quantity represents a lower price per sheet than that obtained for single-sheet purchases at local graphics stores, and is a sufficient supply for many years. Scotch Magic Transparent Tape ranges in price from \$1.50 to \$4.00 a roll depending on quantity and width. Single sheets of mylar film can be obtained from graphics supply stores for \$0.50 a sheet, and smaller pads of vellum can be purchased for under \$10.00, so experimentation is possible for a nominal initial outlay. These construction techniques have proven to be very cost effective, particularly with careful layout work to maximize the number of parts obtained from a single sheet of material.

Examples

To Illustrate the many possible applications for these components, the following examples of models for NAR and FAI competition are included. With the exception of the 10.5 mm diameter 1/4 A PD model, all have been extensively flight tested. Please consult the attached photo booklet for the corresponding photographs. Because the nose cone or capsule weight often dominates the overall weight of the model, the weight *without* nose cone is reported, with the overall weight including nose cone included in parentheses. Weights do *not* include recovery system or rigging (e.g. shock cords). Photographs were taken with a Pentax K-1000 SLR camera using a stock Pentax 50 mm f2.0 lens, on Fuji ASA 100 speed color print film, in natural daylight.

Photo 1: FAI S6 A (Streamer Duration). Vellum paper tubing, aft conical transition and nose cone. This is *Paper Tiger III*, shown in Figure 1, and is nearly identical to *Paper Tiger I*, as described in Appendix A. These models were used to compete in the 1997 US team trials. *Paper Tiger II*, presented in Appendix A, was ultimately judged too extreme, and was not flown. Note that the photographed version differs slightly from the drawing, with a shorter tail cone and the fins bonded to the blackshaft tail tube. *Paper Tiger III* represents the current state of development for this design. Recently placed second in A SD (SpringThing '98). Weight: 3.79 (4.53) grams.

Photo 2: FAI S3 A (Parachute Duration). Modified *Paper Tiger III*. Body tube is extended 5 cm for additional 'chute capacity. Un-hollowed balsa nose cone is too heavy, and was not hollowed due to lack of time. A photograph of this model also appears in Appendix B, showing the piston/tower combination used for launch. This design was used to place 6th at the 1997 US team trials. Recent NAR placings include: second place A PD (Falling Leaf '97), and first place 1/2 A PD (SpringThing '98). Weight: 4.42 (8.84) grams.

Photo 3: NAR 13 mm Parachute/Streamer Duration. As described in detail in Appendix A. Excellent performance on 1/4 A - A 13 mm engines. Numerous contest wins, including first place in A PD (MSC '97). Weight: 2.00 (3.03) grams.

Photo 4: NAR B Streamer Duration. Similar to 13 mm model, but for 18 mm engines. Mylar airframe tube, with blackshaft tail tube and 0.015" G-10 fiberglass

fins bonded with CA. Two recent first place finishes in B SD (MSC '98) and C SD (MSC '97). Weight 5.96 (7.52) grams

Photo 5: NAR C Egg Loft Duration. For use with a C6-5 and a piston/tower launcher. Blackshaft 18 mm tail tube with 0.015" thick G-10 fiberglass fins, bonded with CA. Shroud is 0.004" thick mylar film, NAR number is printed with an ink-jet printer. Has placed 3rd in C ELD (MSC '98). Weight: 8.00 (19.20) grams.

Photo 6: D Dual Egg Loft Duration: For use with a D12 engine, piston launched from a tower. Core tube from 24 mm Blackshaft tubing, shroud from 0.004" mylar film, 0.015 G-10 fins, bonded with CA. Has flown successfully with a vellum shroud. No placings to date, model was lost on a power line for non-recovery of the egg when last flown in D ELD. This model will fly at NARAM 40. Weight: 15.88 (32.80) grams.

Photo 7: NAR 1/4 A PD. New for NARAM 40. Basically similar to the 13 mm model, but with Totally Tubular 10.5 mm white paper tubing for the tail cone assembly. Weight: 1.39 (1.61) grams.

Conclusions

Light weight vellum and mylar components are now well proven in competition and are a standard part of my contest construction. They offer substantial weight reduction, which is a particular advantage for the low-impulse duration classes which dominate the contest schedule. The techniques for producing these parts are simple, and the cost moderate. When combined with mass production techniques[4], these components can be used to construct large numbers of lightweight models in a short time, with minimal effort. This is a further hidden advantage to this approach, allowing highly specialized models to be produced for each event flown at each meet. Finally, other flyers[5] have employed these construction methods in competition, successfully winning the A Streamer Duration event at NARAM 33, and further demonstrating the potential for gaining a competitive advantage with these construction methods.

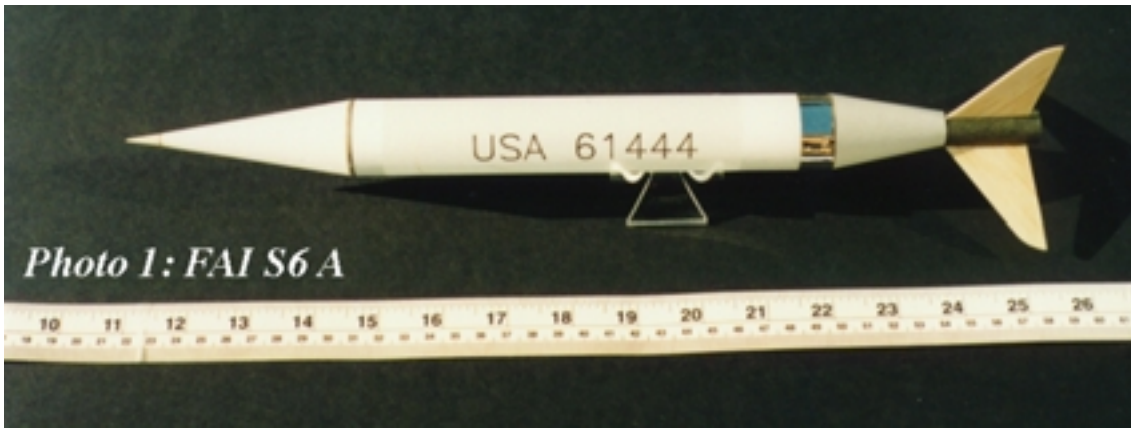

Photo 1: FAI S6 A

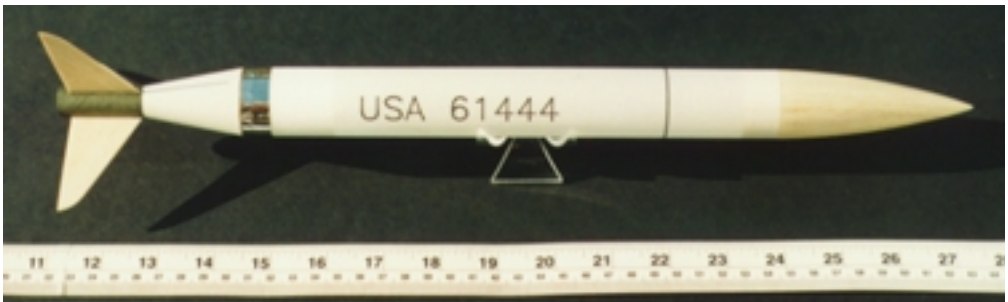

Photo 2: FAI S3 A

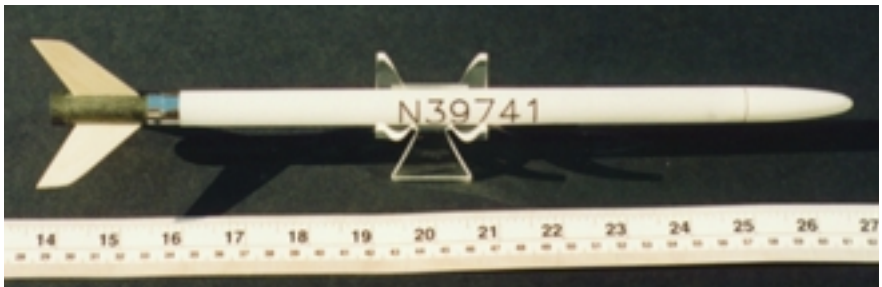

Photo 3: NAR 13mm PD/SD

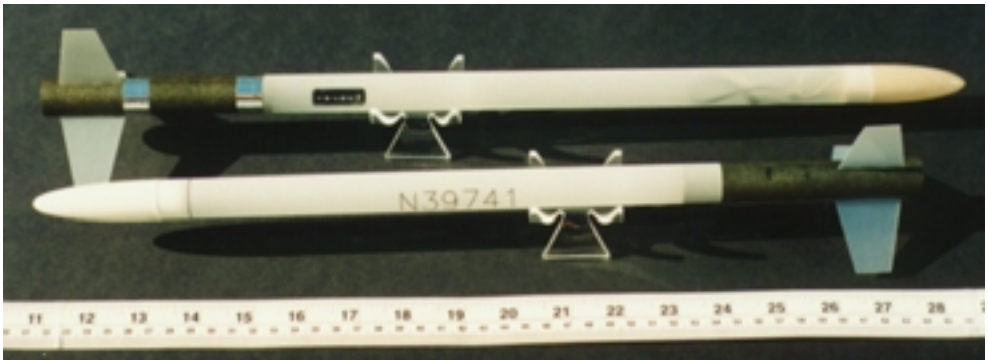

Photo 4: NAR B SD

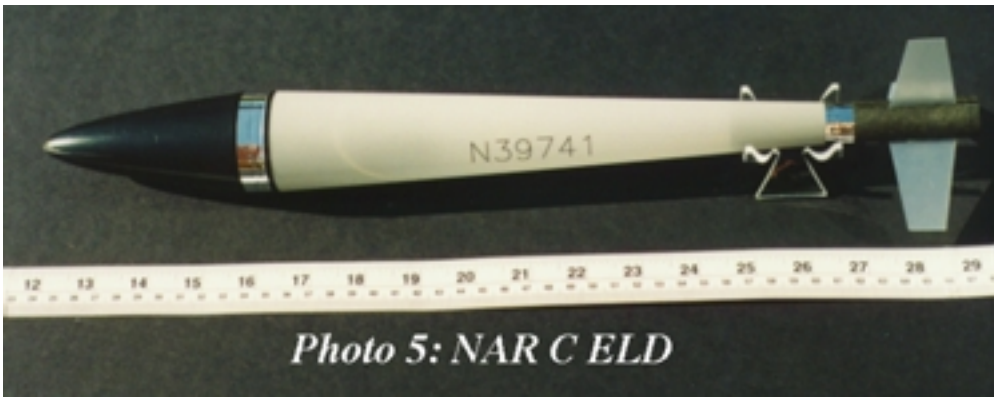

Photo 5: NAR C ELD

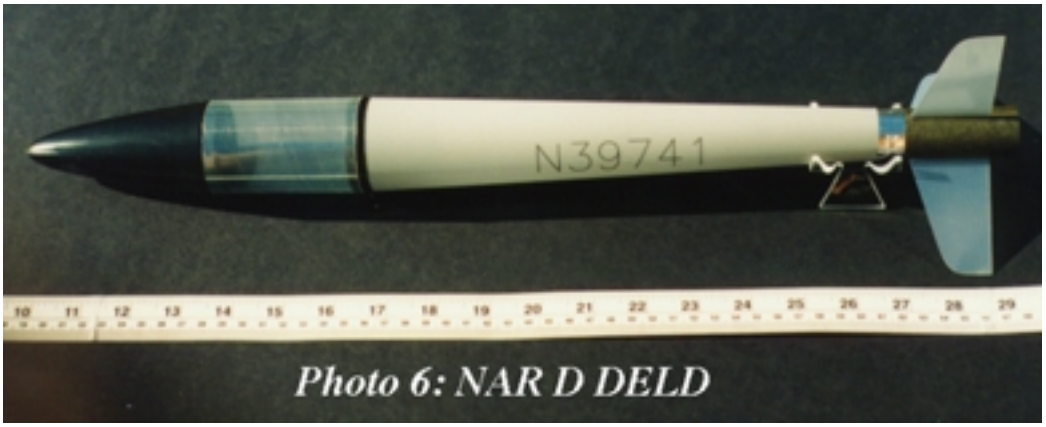

Photo 6: NAR D DELD

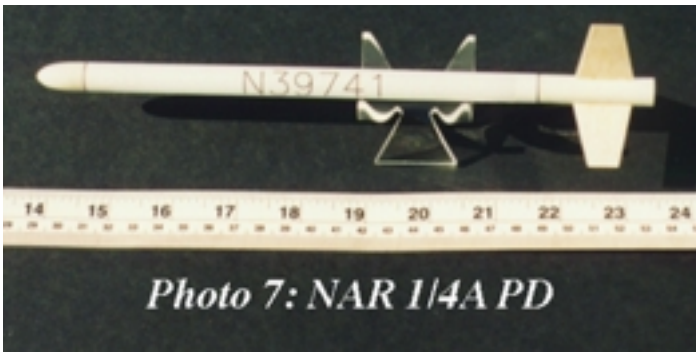

Photo 7: NAR 1/4A PD

References

[1] "Rocket Boosted Origami, or How to Build Really Light Contest Rockets From Drafting Vellum Without (Hardly) Even Trying," A. D. Tomasch, *T Minus Five*, **Vol. 7** Number 4 (1992). **Included in Appendix A**

[2] "The Art of Scale Model Rocketry," Peter Alway, ISBN 0-9627876-3-9, Saturn Press, P.O. Box 3709, Ann Arbor, MI 48106-3709 (1994).

[3] Address: 2825 Boardwalk, Ann Arbor MI 48104. Phone: (734)-663-2471.

[4] "Mass Producing Parts With Power Tools," A. D. Tomasch, *Sport Rocketry*, **Vol. 41** Number 2 (1998). **Included as Appendix B**

[5] "The VDM-3 Streamer Duration Winner at NARAM 33," Al de la Iglesia, *T Minus Five*, **Vol. 7** Number 4 (1992). **Included in Appendix A**

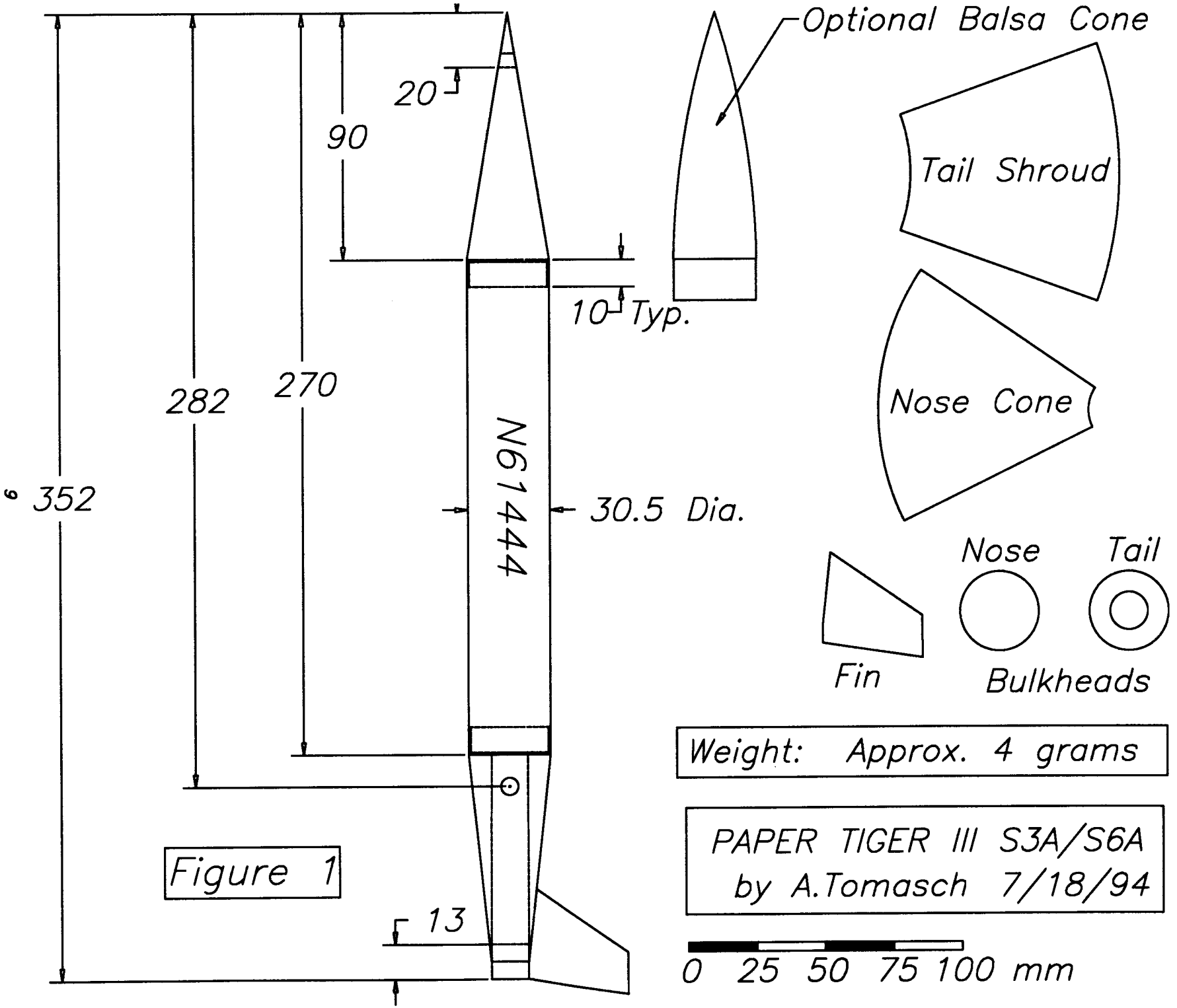
Optional Balsa Cone
20
90
10 Typ.
282
270
352
N61444
30.5 Dia.
13
Tail Shroud
Nose Cone
Nose
Tail
Fin
Bulkheads
Weight: Approx. 4 grams
PAPER TIGER III S3A/S6A
by A.Tomasch 7/18/94
0 25 50 75 100 mm

Figure 1

Appendix A: Rocket Boosted Origami

-or-

How to Make Really Light Contest Rockets From Drafting Vellum Without (Hardly) Even Trying

By Andrew D. Tomasch

–And–

The VDM-3 Streamer Duration Winner at NARAM 33

By Al de la Iglesia

The Vellum Revolution

Two HUVARS modelers bring ultrua-light contest techniques to the masses

Rocket Boosted Origami

or

How to Build Very Light Contest Rockets from Drafting Vellum Without (Hardly) Even Trying

Andrew D. Tomasch

Background

My major goal for the 1991 contest season was to compete for a spot on the U.S. spacemodeling team flying S4B (B boost glider). Because of the additional rules imposed for the team trials, placing in the top three in the event was not sufficient for a place on the team. In addition, a team member would be required to "qualify" in an additional event to be awarded a place on the team. "Qualification" was defined as attaining a score of at least 60% of the winning score in the event. Thus I was faced with the task of developing models for an additional event, even though my only interest was to fly boost glider. The obvious choice was to develop models for S3A (A parachute duration) and S6A (A streamer duration). Since the same airframe could be used for both events, development of one model would permit two chances to qualify.

The goal, then, was to produce a reasonably competitive model while expending the minimum of effort, since time spent on these ships was robbed from boost glider development and testing. As it turned out, my professional commitments so limited my time (I spent most of the summer out of the country) that the only spacemodeling I was able to accomplish was the production and flight testing of my first S3A/S6A airframe. The S4B, though designed, has yet to be built or tested. However, the flight of my prototype Paper Tiger at MSC in early summer has profoundly changed the local contest scene, and has had impact at the national level. Based on having seen this one model, Buzz Nau and Al de la Iglesia developed a minimum diameter 13 mm model using vellum construction and won A streamer duration with it at NARAM-33 (once the RSO could be convinced it was strong enough to fly) (see Al's article elsewhere in this issue. By the time of Falling Leaf, the majority of competitors were fielding vellum models for the 1/4 A duration events.

Development of the Paper Tiger

The Paper Tiger owes its origins to some good luck. By chance, I was able to obtain a state-of-the-art S6A model constructed by Ukrainian Yuri Gapon (see photo on page 10). This ship follows the current vogue of molding the entire airframe from fiberglass cloth and some sort of resin over a machined mandrel (form). This produces a very light and smooth model. However, the stiffness of the body tube leaves something to be desired, bearing more resemblance to a plastic bag than a rocket airframe. The valuable lesson I learned is that standard rocket construction materials are the moral equivalent of cast iron and boiler plate. The average model rocket is many times heavier than it needs to be to withstand the loads imposed on it during flight. I set myself the goal of matching Gapon's airframe weight of 4.14 g. This brings up another important point: a good scale is an invaluable tool for assessing the weight of new materials. Without accurate weight data, it's difficult to know if progress is being made toward lighter models. The other key ingredient is a notebook to record your observations and ideas.

Initially, I intended to use balsa tubing rolled from 1/32" sheet as the basis of my airframe. This material is very easy to make and much lighter than kraft paper tubing. It has the

Continued on page 13

The VDM-3

Streamer Duration Winner at NARAM 33

by Al de la Iglesia

Plans for the Thrust You Can Trust team's NARAM-winning A streamer duration model appear on page 12. The name is an acronym of Vellum Duration Model, round 3. The first round was developed for 1/4A engines and was much shorter. The second was made this size but suffered burn-through forward of the motor at ejection when flown at MAR 53. This third round was modified for NARAM 33 by the addition of a layer of chrome trim monokote to prevent burn-through. The idea of using vellum tubing was borrowed from Andrew Tomasch and his FAI model design (see his article "Rocket Boosted Origami", elsewhere in this issue). The vellum tube greatly reduces weight and is the major factor in the success of this design.

Don't worry about rolling a tube; the construction is very simple. The first thing you need to do is get a mandrel on which to roll the tube. I have used several types with success: a dowel sanded down to 17/32", a brass or aluminum tube, and a piece of Apogee PT-18. The idea is to get something that won't lose its shape when heated. Make sure the mandrel is about a foot long; if it is too short it will be hard to hold when ironing.

Trace the body tube pattern (including the fin alignment lines) onto 15 pound tracing vellum and cut it out carefully. Cut out a piece of trim Monokote as the plan indicates. I use chrome because it is the lightest, but other colors should work. Stick the Monokote onto the vellum in the cross-hatched area such that when the tube is rolled, the Monokote will be on the inside. On the long, shadowed edge apply a light layer of Elmer's glue (spread it thin with your finger) and allow to dry completely. Next wrap the vellum around the mandrel such that the arrows and the overlap tab are all aligned. Temporarily tape the edge down with a few small pieces of masking tape. Iron the joint in the middle and allow it to cool, then remove a piece of tape and do the same thing. Keep doing this until the whole joint has been sealed. When the tube and mandrel are cool, the tube should easily slide off. Put the tube back on the mandrel in order to attach the fins without destroying the tube.

Cut out three fins from 1/32" light balsa, round all edges except the root, and block sand the sides with 320 grit sandpaper. To attach the fins, lightly mist the fin alignment lines with CA accelerator, then apply a thin line of thick CA to the fin root. After it soaks into the fin for a few seconds, stick the fin to the tube carefully. It usually grabs in a second or two. Attach the external shock line at the root of one fin with a thick CA fillet. Then apply thick CA fillets to all the fin joints. When all the CA is dry give the fins one very light coat of clear dope that is thinned 50%.

Then hollowed an Estes balsa cone and finished it the same way as the fins. Make sure the nose-tube joint is as smooth as possible.

You need to make a foam ejection plug for this model as it plays a major structural role. We cut plugs out of 1" white foam on a scroll saw after drawing circles with a compass to the correct size. Other methods, like using a hot wire, or merely shaving a foam block with an X-acto knife, work as well. Most of the different kinds of foam weigh about the same, so choice of material is not important, although blue Dow styrofoam does not crumble as much when cut with a knife.

Continued on page 13

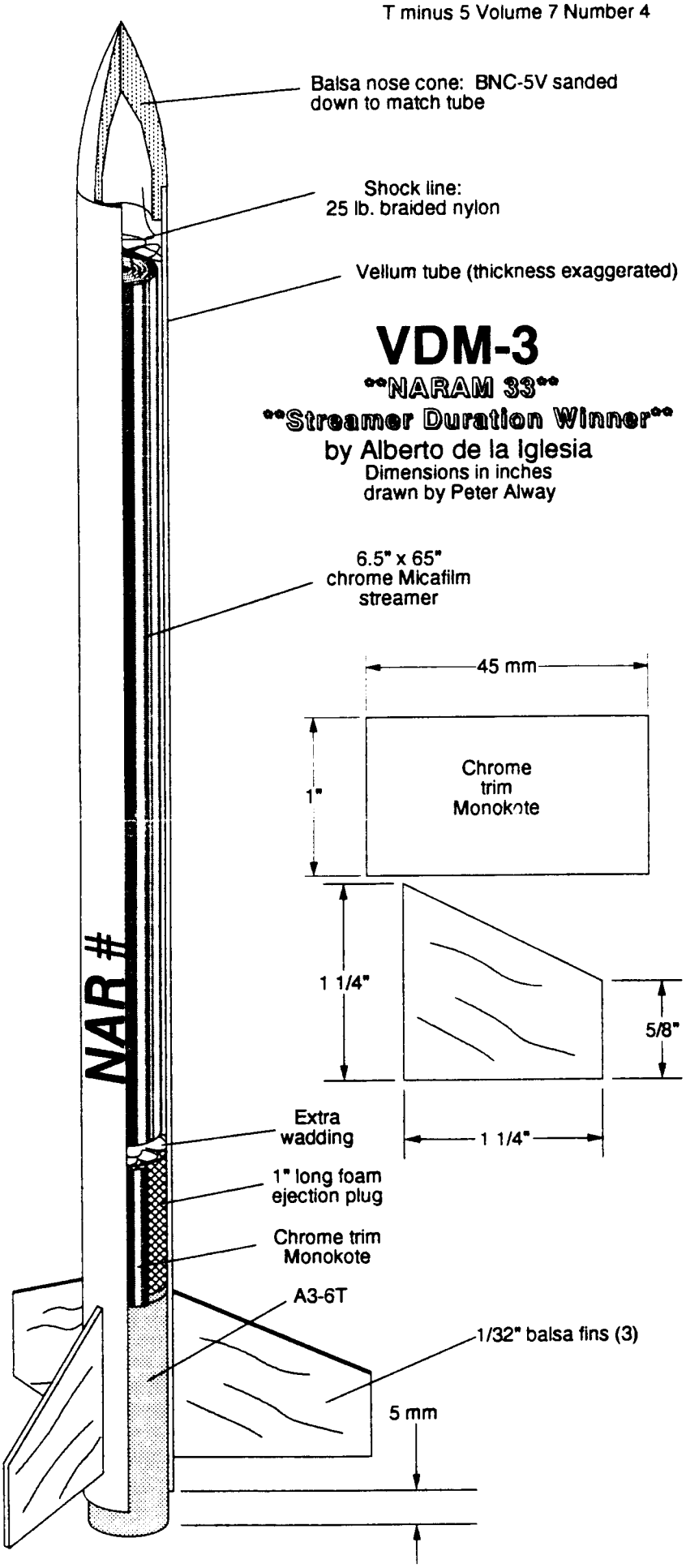
Balsa nose cone: BNC-5V sanded down to match tube
Shock line: 25 lb. braided nylon
Vellum tube (thickness exaggerated)
VDM-3
NARAM 33
Streamer Duration Winner
by Alberto de la Iglesia
Dimensions in inches
drawn by Peter Alway
6.5" x 65" chrome Micafilm streamer
45 mm
1"
Chrome trim Monokote
1 1/4"
5/8"
1 1/4"
NAR #
Extra wadding
1" long foam ejection plug
Chrome trim Monokote
A3-6T
1/32" balsa fins (3)
5 mm

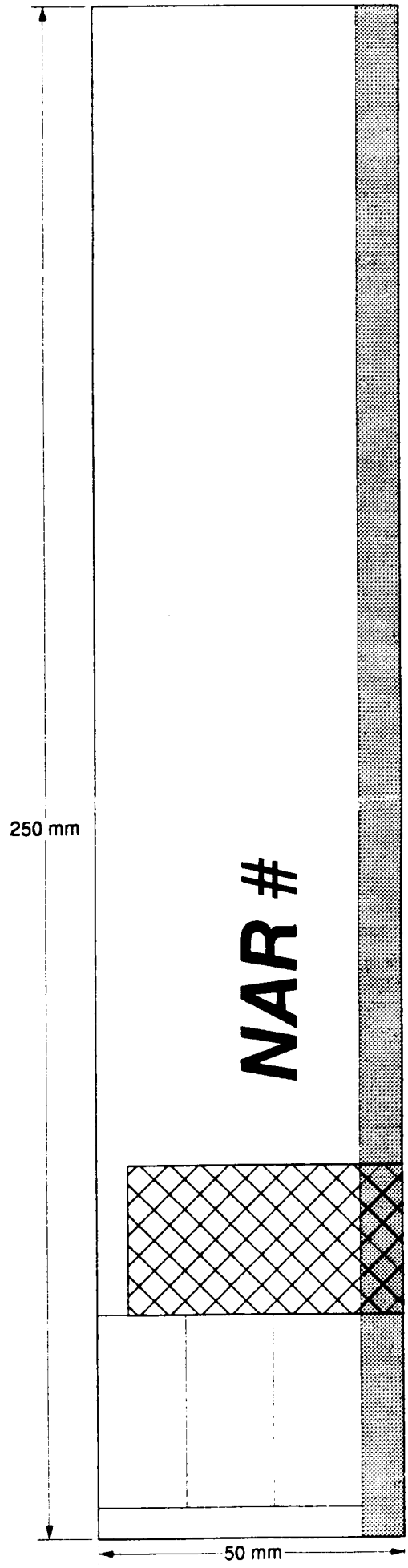
250 mm
NAR #
50 mm

VDM-3 (continued from page 11)

For our models we use 6.5" X 65" chrome Micafilm with 1/2" accordion folds for 2/3 of the length. Then I accordion fold the next foot and lightly iron it flat. Doing this makes a transition from the flat streamer to the full accordion folds. We discovered this idea by accident and it seems to cause the streamers to flap more and hence stay in the air longer.

Don't use a screw eye in the nose cone—it's too much weight. Glue the shock line in and leave a loop for attaching the streamer Since there is no engine block, make sure you securely tape the motor on the outside. Don't rely on a friction fit. The model alone weighs about 2-3 grams, gross launching mass is about 20 grams for optimum altitude.

We use a piston and tower combination to prevent tip-off, this baby comes out really fast so keep your eyes peeled. On an A3-6T it goes out of sight, so look for the streamer. At NARAM 33 we blew everyone away by more than 100 seconds with this model. Good luck!

Rocket Boosted Origami (continued from page 11)

additional advantage that it can be covered with Japanese tissue to produce a smooth, colorful, and lightweight tube. Next, I decided to cut down Apogee Nova egg capsules to produce nose cones and tail transition cones. This works, but is awfully expensive and HEAVY. Such a nose cone weighs 1.68 g, with the tail cone at 1.49 g. That's 68% of the target weight in just the cones. Next I decided to eliminate the weight and expense of the tail cone by replacing it with paper. Drafting vellum looked like a nice candidate, since it is very smooth, water resistant. and readily available. I produced a vellum tail cone, bonding the seam with Scotch Magic Transparent mylar tape. This was a remarkably strong, lightweight component (0.23 g). At this point the light bulb went off, and I decided to make a 30 mm body tube in the same way. This proved to be very strong, light (1.38 g), stiff (it holds its shape much better than the fiberglass tubing on Gapon's model), and easy to make.

The final problem was the nose cone. The cut-down nova cone was now just too heavy to justify, given the ultralight nature of the rest of the airframe. I had neither the time nor the inclination to try molding fiberglass cones. Again, the inspiration was Soviet: If conical nose cone is good enough for their launch vehicles, it should be good enough for me. The Chinese get honorable mention in this regard as well, since skyrockets had conical paper nose cones a thousand years ago! The final design uses a 3:1 taper with a balsa tip produced by "machining" soft 1/4" balsa stock in an electric pencil sharpener. The base is made from balsa tubing, with a 1/32" balsa bulkhead to hold it round (0.24 g). A loop of Apogee Kevlar line is bonded with CA to the back of the bulkhead and routed through the bulkhead/tube joint for recovery system attachment. Total nose cone weight is 0.69 g.

Paper Tiger I, flown at MSC, has a rugged tail cone assembly which includes an Apogee Blackshaft core tube, and a rolled balsa ring and bulkhead similar to that of the nose cone at the body tube/tail cone interface. The conical paper tail shroud extends back only as far as the fin leading edges, with the fins bonded directly to the core tube. This produces an absolutely bulletproof tail assembly which should survive unlimited launching. The body tube is attached to the balsa ring with a turn of Apogee 1/2" wide mylar tape, and can be removed and replaced. Wadding is from 1" thick white styrofoam "beadboard" (1 lb cu.ft density) cut with a hot wire, as on the Ukrainian model. This provides excellent protection of the recovery system and airframe. The body tube is still serviceable after three launches, but is beginning to show some distortion. The weight of Paper Tiger I less rigging and recovery system is 4.14 g, dead even with Gapon's model, thus achieving my initial goal. A test flight on the then contest-illegal A3-6T at MSC yielded a duration of 90 seconds without the aid of a thermal. The model boosts without tipoff from a 13 mm ¥ 12" piston, and deploys the recovery system exactly at apogee.

The drawing on page 14 shows Paper Tiger II, which is an attempt to build the lightest possible airframe using these techniques. Experience has shown that fins can be bonded directly to a vellum airframe tube and have adequate strength (Al and Buzz did this on their NARAM-33 winner). I have had good success with cardstock fins cut from a manila folder. While substantially heavier than 1/32" balsa fins, these are much thinner and smoother, requiring only a few coats of clear dope for a finish and offering less drag. Paper Tiger II therefore employs cardstock fins bonded to a vellum tail cone which extends to the rear of the airframe. The blackshaft core tube has been reduced to a 1/2" ring to which the engine is taped. The external shock cord mount is also bonded to this ring with slow CA. The balsa ring at the tube/tail cone joint has been eliminated, and the bulkhead is laminated from two thicknesses of 1/32" balsa with their grains crossed for stiffness. A single thickness bulkhead inside a 1/4" balsa ring might be a better alternative, resulting in easier assembly and the possibility of body tube replacement as on Paper Tiger I . The bulkhead is perforated with 4 holes to serve as an ejection baffle, offering additional protection for the upper airframe and recovery device. Paper Tiger II weighs in at 3.5 g and represents a breakthrough in lightweight construction, since 4 g seems to be the international standard for lightness. A prototype has been constructed and is ready for test firing. I am confident that it will withstand flight loads. The remaining question is how well the unprotected tail cone stands up to ejection. My guess is that most of the burning debris will hit the baffle plate and not the cone wall. If the cone does suffer significant burn damage, a vellum tube can be inserted in the end of the engine casing or attached to the blackshaft tail ring to focus the ejection forward and prevent it from striking the cone wall.

Vellum Construction for NAR Models

The drawing on page 15 shows one approach to vellum construction applied to produce a 14 mm diameter NAR model. By using a blackshaft tail assembly, a very robust model results. The vellum tubing can be replaced in the event of burn damage. This approach is midway between the old "boilerplate" and an all-vellum airframe. Blackshaft tubing of 14 mm diameter has a linear mass density of 0.127 g/cm, while vellum tubing is only 0.042 g/cm, a factor of 3 difference. Replacing 7" of blackshaft with vellum in the design shown saves 1.5 g, and makes the difference between a 2.4 g model and a 3.9 g one, a savings of 39\% for almost no effort. The vellum tube is attached to the tail unit with Apogee chrome mylar tape, and can be replaced in minutes if damaged. Compare the 2.4 g final airframe weight with the 3.5 g for an expended 13 mm engine casing. The model is now 29% lighter than the spent engine!

Construction Hints

The new skills and materials required for these models are minimal. For material I am using Crystalene vellum produced by Keuffel and Esser. It is approximately 0.003" thick and has a surface mass density (useful to know for weight estimates) of 0.0069 g/cm2. A pad of 50 sheets 17"x 22" sells for around $15.00 at Ulrich's in Ann Arbor. While not a trivial expense, this is enough material for perhaps 100 models if care is taken not to waste it, and the actual cost per model is pennies. Vellum models aren't just light, they're CHAD (CHeap And Dirty)!

To produce vellum tubing you need a suitable mandrel. For the NAR model shown, just use a piece to blackshaft tubing as your form. For the Paper Tiger I roll the balsa tubing for the nose cone shoulder first and then roll the vellum tubes around it, ensuring a perfect fit. Cut a blank from vellum, allowing 1-2 mm of overlap at the seam. The required width is

$$W = S + (\pi \times D)$$

Paper Tiger II

S3A/S6A
by Andrew Tomasch
Dimensions in millimeters
drawn by Peter Alway

Weight: Approx 3.5 grams

Side view at 1/2 scale.

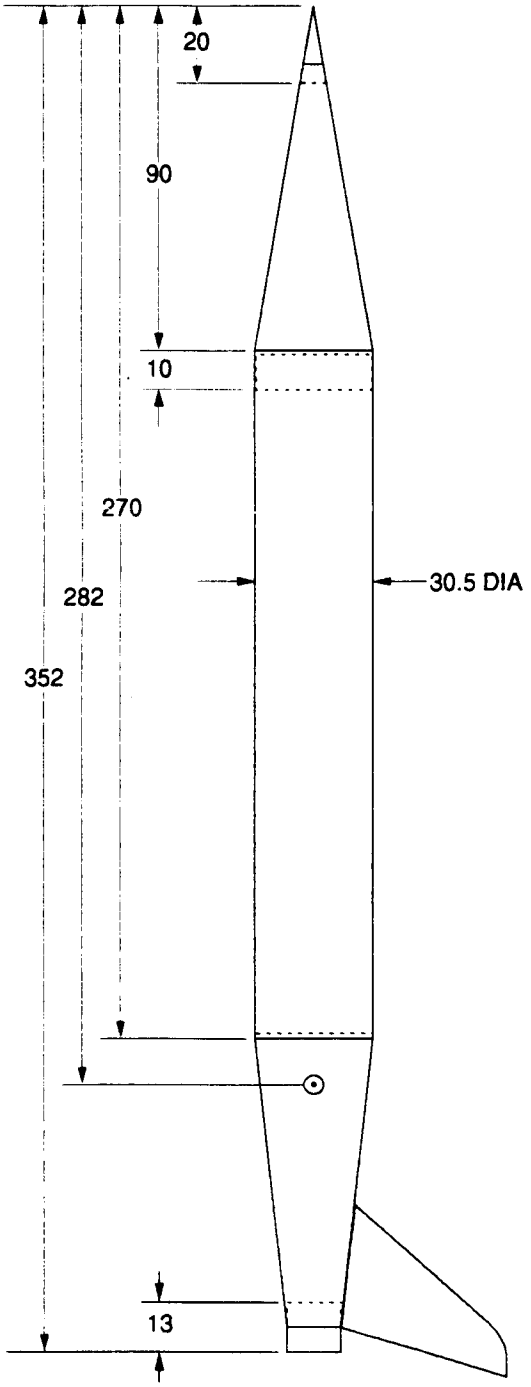

Full size patterns

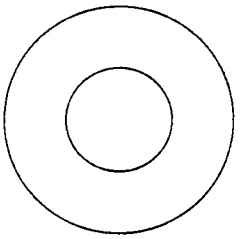

Nose Bulkhead

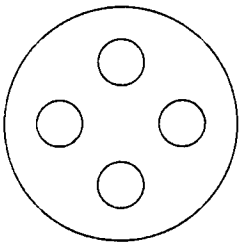

Tail Bulkhead

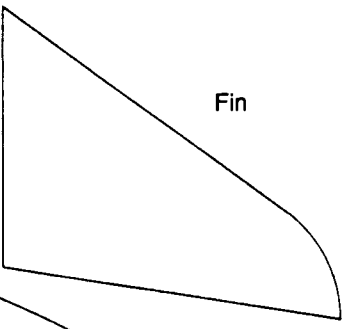

Fin

Tail Shroud

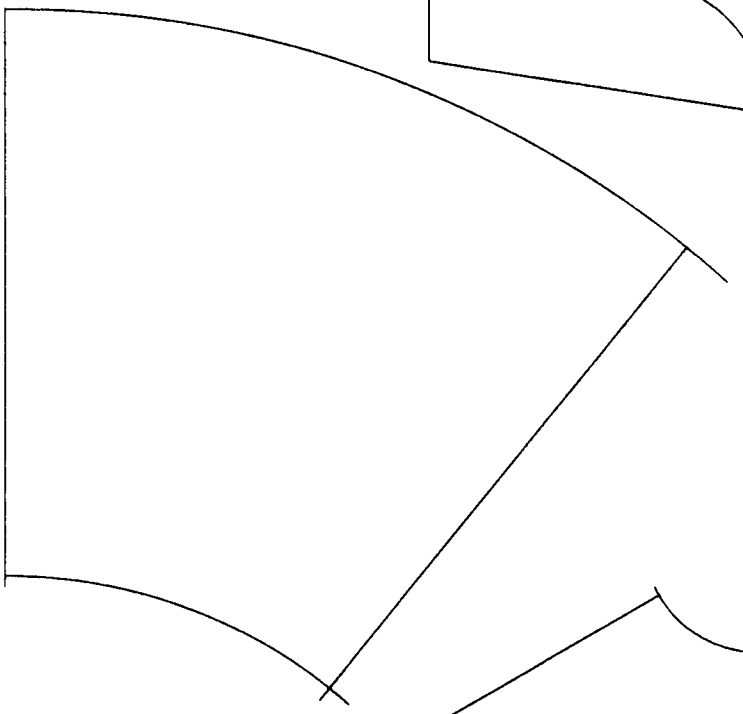

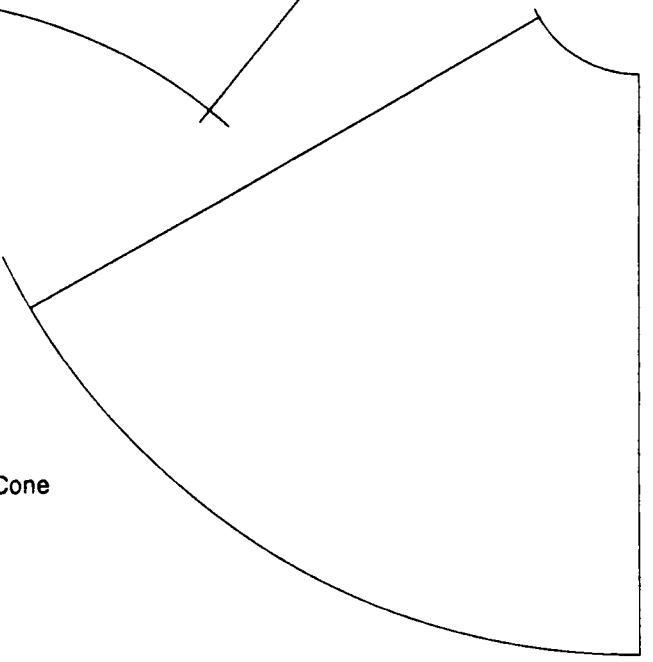

Nose Cone

where D is the desired inside diameter, W the width, and S the overlap at the seam. For 13.7 mm tubing this works out to 45 mm or 1.77". A ruler calibrated in decimal inches or millimeters is most helpful for laying out parts, and a precision caliper is better still. I prefer to cut out a large number of blanks and mass produce a lot of tubes at once, allowing plenty of spares for field replacement.

To roll a tube, place a strip of 1/2" wide Scotch brand magic transparent tape (the "foggy" mylar based material) which is several inches longer than the finished tube adhesive side up on a flat clean table top. The tape can be held down with weights at the ends if desired. The trick is to get your fingers unstuck from the tape without disturbing it. Next, carefully position the vellum blank so that one edge overlaps the tape by approximately 1/4" and smooth it onto the tape, avoiding the adhesive with your fingers. Trim away the extra tape at the ends of the blank with a sharp knife or scissors. You now have a vellum blank with an adhesive edge ready to wrap around your form. Carefully roll the blank around the form and begin to work the seam overlap with your fingers. The trick is to get the un-taped edge of the vellum to tuck under the taped edge without pressing the tape down. When the seam is completely tucked under and you have aligned the blank so the seam is not twisted, press the tape down along the seam from the center outward.

Your first few attempts will probably not work, but a little practice will yield success. Always smooth the tape from the center outward, both when applying it to the blank or on the mandrel, as this will prevent it from bunching up along the seam. Conical shrouds for nose cones and tail cones are made in a similar fashion, without a mandrel. Here the trick is to align both ends of the seam properly before smoothing out the tape. I also trim the tape to be 1/4" wide at the base of the cone and to follow the edge of the seam. A standard tab is employed at the cone joint. Note that in all cases the tape ends up on the outside of the finished part.

As mentioned before, slow CA works well for bonding to vellum parts. When using thin cardstock or balsa fins, great care must be taken to insure that the part is flat and warp free before bonding it in place. I tack cement fins in place with Testors green label model airplane cement. For a finish I recommend one or two coats of clear dope thinned at least 50%. This provides additional waterproofing and adds considerable stiffness. Since I have a computer drafting program and digital plotter available, I draw all my blanks for tubing and shrouds with the plotter. This allows me to cover an entire sheet of vellum with accurate, identical patterns, making efficient use of the material. It also allows me to draw my NAR number on the parts with India ink. This is waterproof and can be doped over, although it can bleed slightly if repeatedly brushed over. There is great potential for producing interesting decoration by coloring the vellum with permanent ink markers before assembly. My Redwing Asp round 1, flown at Falling Leaf in 1/4 A scale altitude, had no paint except for the nose cone. All the black and white markings on the body and fins were done in India ink, adding negligible weight. If you don't have a hot wire to cut foam wadding, cut it "cookie cutter" style with a sharpened piece of blackshaft tubing.

Stability

A special note is in order regarding stability. These models are so light that they provide no counterbalance for the engine casing and end up tail heavy. The recovery device therefore provides the forward weight required for a stable center of gravity location. Paper Tiger I carried a 13 g (three times the weight of the airframe!) streamer and was just one caliber stable by Barrowman analysis. In general, the recovery device will outweigh the airframe. Always check the CG location of a new model to see that it's reasonable. A good way to stay out of trouble is to make the models a little longer than usual, giving the recovery system a longer lever arm. Always pack your recovery system as far forward as possible, particularly heavy elements like the shock cord.

Conclusion

Vellum construction is in infancy, yet has already had an impact on contest flying at both the club and national level. Though not in keeping with the current fashion trends in FAI construction, I feel these techniques will produce models that will be truly competitive. The single biggest improvement yet to be made is to replace the CHAD conical nose cone of the Paper Tiger series with a molded ogive, such as the glass ones being developed by Al de la Iglesia, since the conical cone is at least 0.1 worse in drag coefficient, and this translates into perhaps 100' of altitude. Meanwhile CHAD models like the Paper Tiger make it trivial for anyone to fly FAI streamer and parachute duration. How about a club contest for these two events? We could limit the events to conical nose cones to make it easy for everyone. Lest you develop an inferiority complex building "paper" models, let me point out that vellum isn't paper at all—it's a composite of cotton fibers embedded in a binding resin. The proper description for this type of construction might be "thin film composite". And don't limit yourself to vellum. Art and graphic supply stores are full of many different paper and plastic film materials. Drafting mylar comes to mind as useful for higher impulse models. The important thing is to experiment. Just be sure that your experiments are guided by the three fundamental principles of duration flying:

1. Keep it light.
2. Don't make it heavy.
3. It shouldn't weigh too much.

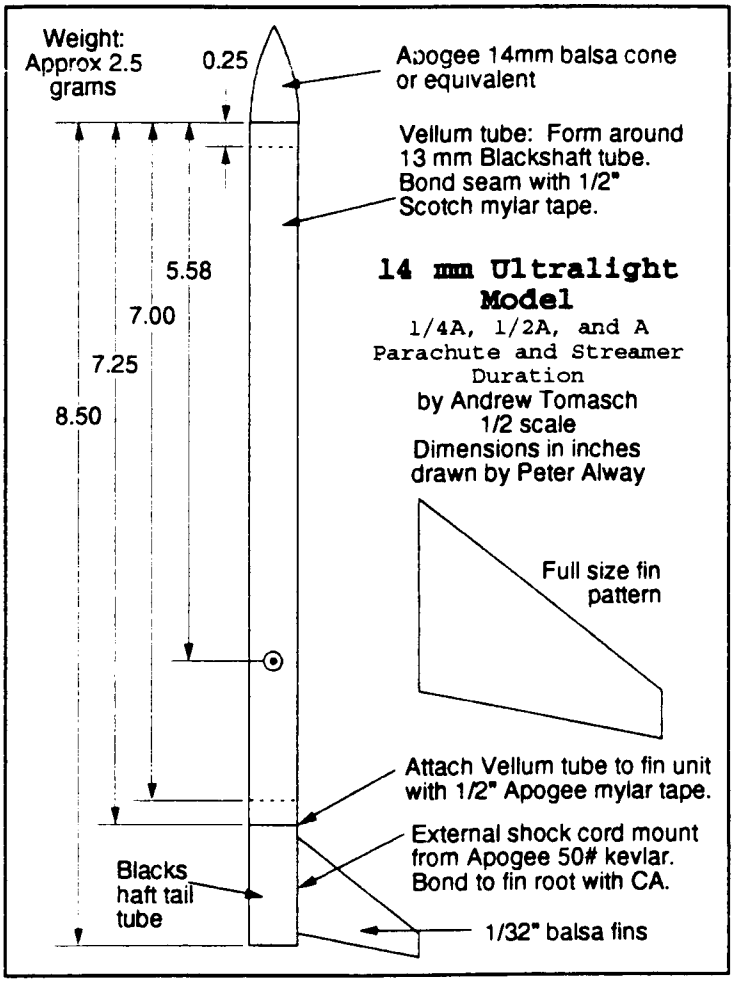

Appendix B: Mass Producing Parts With Power Tools

POWER TOOLS

By Andrew Tomasch
from T minus 5 Newsletter

So you need to build eight new models for an upcoming contest? Hmmmm—that's 24 fins, 8 balsa centering rings—too much time to spend with an X-acto knife. Ahh, you do have a band saw and a disk sander, don't you? Try this trick: Cut a stack of identical rectangular blanks with your band saw. This goes quickly if you saw all of one dimension using a rip fence. Stack up what you got from the first cuts, reset your rip fence, and then cut the whole shebang to the other direction. Let's assume you're making fins.

Fins: The Sneaky Part

Glue all the blanks together to make a laminated block which you can shape with your band saw and disk sander. Just use a few spots of Testors "green label" model airplane cement—the less the better—between each layer. Now the block isn't solid, and the glue will take a while to dry. Wrong! Nuke the stacked up block for 20 seconds in your microwave oven. Press it hard on a smooth surface (kitchen counter) to ensure none of the layers have separated, and then nuke it again. You now have a solid little block.

Draw the fin shape on it, and you can saw and sand it into shape in 2 minutes. So you have one very thick fin. Now what? Toss it into a bottle of dope thinner. In a few minutes the thinner will dissolve the glue and you now have a hand full of *identical* parts.

Dry the thinner off with a paper towel, and you're done. The longer you can wait, the more easily the parts part company. If you're in a real hurry, separate them with a razor blade. The less glue you can use, the easier this is. You may mess up one or two parts, but you should have stacked up a few extras anyway.

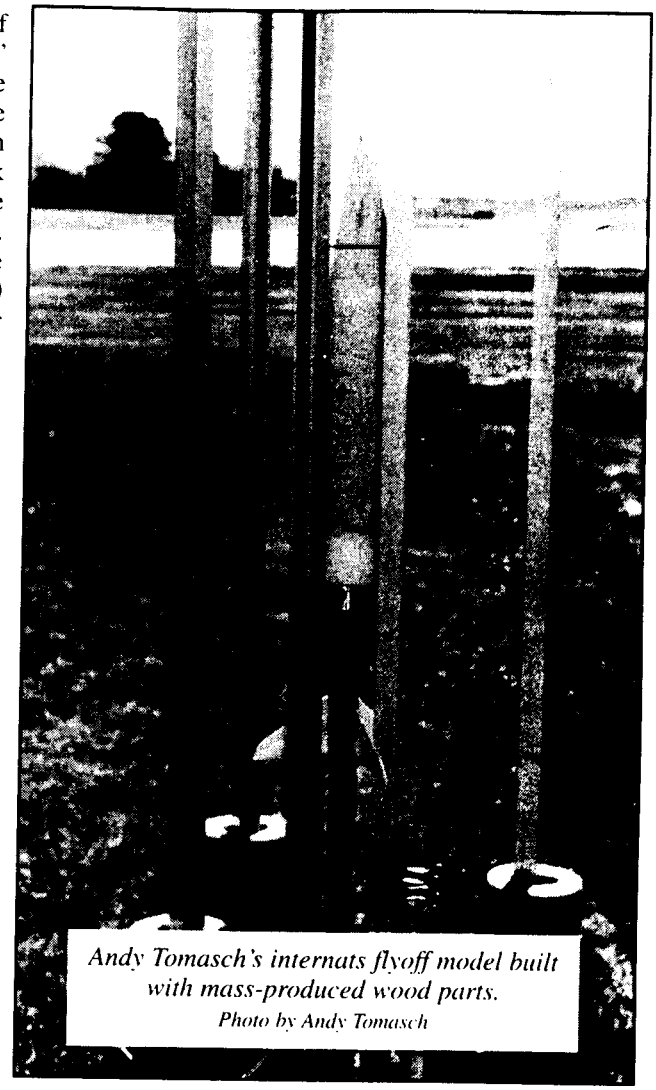

Andy Tomasch's internats flyoff model built with mass-produced wood parts.
Photo by Andy Tomasch

Centering Rings: The Trick

You'll want to turn the centering rings on your drill press, but there's a trick. Stack up square blanks, draw a line from corner to corner, and where they cross is the center. Drill for a 1/4-20 bolt (or whatever size bolt you want to use), draw the circle for the desired final diameter on the stack, and saw the corners off with the band saw.

Trap the stack with two nuts (the sec-

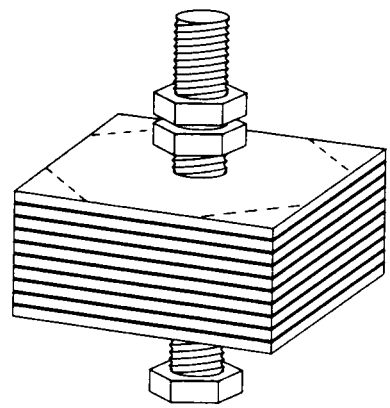

Figure 1. Drill a 1/4" hole through a stack of square blanks. Cut off the corners as shown by the dotted lines. Insert a 1/4-20 bolt and trap the stack using two nuts.

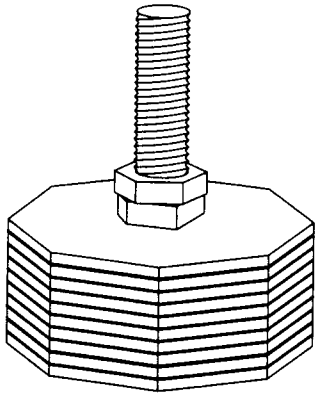

Figure 2. The stack of blanks (now octagonal) with the nuts tightened, ready to chuck in the drill press.

ond jams the first and keeps it from unscrewing) and some washers on a long bolt. Now chuck the bolt in your drill press, with the chuck right up against the nuts (again to prevent unscrewing).

A final trick is to attach your sandpaper to a piece of scrap angle stock with double-sided tape. Bring the table of the drill press up so that the angle stock can rest it's sandpaper-free side on the drill table (now your tool rest). As you sand the part to final diameter this arrangement ensures that the edge of the sanded rings will be absolutely square, and all the parts will sand to exactly the same diameter.

To make the holes, remove the stack from the bolt and use a wood boring bit with a center finding spike to follow the hole in the middle. Drill over a soft pine block, and plunge the bit slowly and gently, backing off to clear the chips often.

If the holes are undersize (there is no such thing as a 13mm bit at your local Sears), then attach a strip of sandpaper to the size dowel or tubing which will just fit through the hole. Twist it through the undersize hole in the block, which will immediately begin to enlarge. Keep turning the block like a wheel on a shaft, checking the fit with whatever the ring must fit over (in this case 13mm blackshaft tubing) until you get the desired fit.

Into the jar of thinner and you're done. This really works, but it takes practice (yes, I screwed some up learning how). The two outer most parts get crunched by the pressure from the bolt, so include some extras in your stack up. These techniques work really well with thin plywood too.

Save Work on Cleanup

One last trick: find a way to clamp the hose of your shop vacuum to have it behind the drill chuck area while you're "machining" balsa parts. Put a hose clamp around the vacuum cleaner hose, and clamp the free end of the hose clamp band to the table. Cable ties can do it for you too. This arrangement really sucks up the dust, which otherwise makes an awful mess. I can turn balsa and have a completely clean shop when I'm done. Really neat watching the dust come off the part tangent to the part and stream through the air into the vacuum hose. ***SR***