Triangulation:
A Rocket Recovery Aid

By David Shenosky
NAR 70919 / A Division
Research & Development

Overview

One of the neat things about model rockets is that you can fly them over and over again. But, before you can launch your model a second time, you have to find it after its first flight. This project is about coming up with an easy way to find where your rocket lands.

At my last NARAM, I saw people trying to find their rockets by getting a compass bearing on their model. They would walk in the direction of the compass reading to find where their model landed.

A problem with this method is that a compass reading doesn't tell you how far you have to go to get to your rocket. The compass only provides you with the direction. After losing several models even though I was using a compass, it seemed to me that there had to be a better way to find rockets.

I have seen how people use theodolites to track altitude models. Tracking uses the laws of math to calculate how high a rocket went. This process is called triangulation.

I wondered if the math used in triangulation could help calculate the location of a rocket's landing point. Instead of calculating altitude by triangulating on the model in the air, was it possible to triangulate on the model's position on the ground?

I decided to research if this was possible, and to find out how it could work.

Objectives

The objectives of this research and development project were:

1. Develop a simple triangulation system to help recover model rockets

2. Test the system

3. Make improvements for use in either sport or competition flying

Approach

The steps in this project were:

1. Learn about triangulation

2. Build a triangulation system

3. Lay out flying field

4. Flight test

5. Check results

6. Make conclusions

Learning about Triangulation

The dictionary gives a definition for triangulation as "establishing the distance between two points by calculations based on the angles of a triangle and the length of a measurable base." Trigonometry is defined as "the branch of mathematics that deals with the relation between the sides and angles of triangles and the calculations based on them."

If you add all the angles of a triangle together you will get 180 degrees. If you know two of the three angles of a triangle, you can find the third angle. You add the two angles together then subtract from 180.

The Handbook of Model Rocketry by G. Harry Stine shows drawings of different tracking systems. These drawings show how to take triangles and use equations to figure out distances of the sides. To do this, you need to know two of the angles and the distance of one side of the triangle.

If you have a triangle with angles labeled angle a, angle b and angle c, and you know the baseline (side B), then to find the length of side A, you use the equation:

*Side A = sin a * (Baseline / sin b)*

The sine of an angle can be looked up in a table or calculated by a computer program.

Here is an example of how to do the math using a typical triangle:

If Angle a is 50 degrees and Angle c is 47 degrees, and the baseline opposite angle b is 200 feet, the math looks like this:

Angle b = 180 - (Angle a + Angle c)

Angle b = 180 - (97)

Angle b = 83 degrees

Then, you use a sine table and put the numbers into equations that can be solved with a calculator:

*Side A = sin a * (Baseline / sin b)*

A = 0.731 times (200 / .993)

A = .731 times (201.40986)

A = 154 feet

If you want to skip the math you can make up a plot board with graph paper and a protractor. A plot board gives you a scale model of a large triangle. The distance to your rocket can be estimated using a scale ruler.

Building A Triangulation System

The next step was to design a triangulation system. Two angle finders were needed.

The goals for the angle finder design were:

1. Easy to carry to the flying field

2. Cheap to make

3. Very accurate

4. Simple to use

Equipment Used

The design I came up with is basically a disk on top of a pole that goes into the ground.

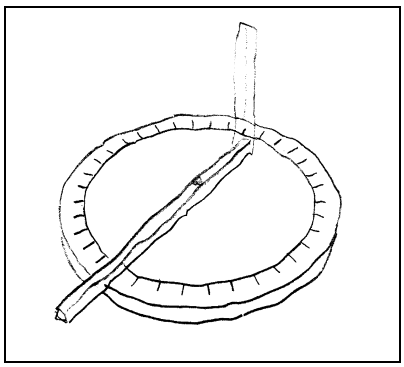

On the disk, there is an angle finder scale with an accuracy of 1 degree. The disk was made on a computer program.

The disk also has a stick used like a sight on a gun. The stick sits on a dowel glued to the angle finder. You drill a hole in the stick to let it to swing around the scale.

At the front of the stick is a plastic sheet sticking up with a line drawn straight through the middle. On the other side of the stick, there is a small screw eye. This allows you to look through the screw eye and the piece of plastic to get the most accurate reading possible as your model descends to the ground. The angle can then be read from the disk.

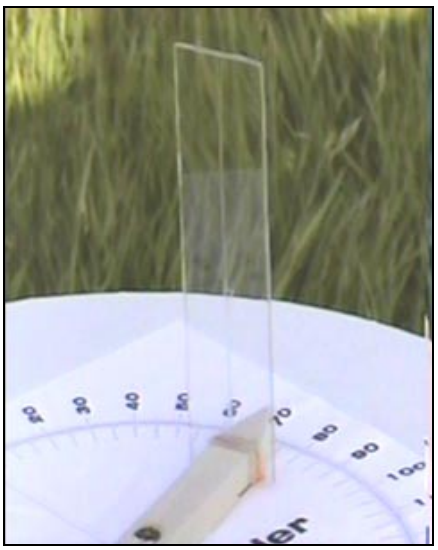

The rest of the parts were purchased at a hobby shop or found around the home (anyone with wood, glue and paper can build this). The other parts include a plywood disk, a large round dowel found at hardware stores, and a small plastic collar used in sprinkler systems.

A plywood disk holds the angle finder scale. The plywood disk is glued to the plastic collar which fits over the large dowel rod. Then, the bottom of the large dowel rod is sharpened to a point so you can easily stick it into the ground.

I also made a plot board so the distance to the rocket could be estimated without using a calculator. The plot board is a scale model of the flying field.

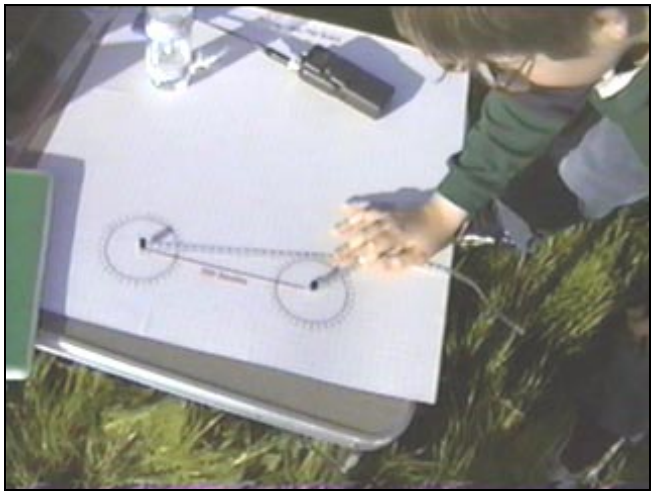

The plot board has a grid with two angle scales printed on it at the end of a scale 200’ baseline. Scale rulers can be placed on the plot board. If the rulers are placed at the angles from the two

angle finders, the rulers will cross at the estimated landing location of the rocket.

Other equipment used includes a 200’ measuring tape, a compass and a camera to take pictures of the project. Walkie-talkies were used to communicate.

I decided to use multiple types of rockets for flight testing. These models were single-stage. Instead of doing custom designs, I chose kits or already-built contest models.

Layout of Flying Field

Next, it was time to lay out the flying field.

The system I came up with is basically an altitude tracking system flipped over on its side. The three points of the triangle are the rocket’s landing point and two tracking stations. The base of the triangle is the baseline.

One of the tracking stations is at the launch pad so the person launching the rocket can also track the model. To make sure that I didn’t mix up the angles, I named each tracking station a different color. The angle finder far away from the launch pad area was called Tracker Yellow because the angle finder disk was yellow. The angle finder closest to the pad area was Tracker White because the disk was white. Both trackers have to be calibrated so zero degrees is on the baseline.

A baseline of 200’ was used because it would easily fit on the flying field used for this project. It was decided to line-up the baseline with a nearby fence that cuts across the flying field at a compass bearing of 30 degrees.

The next step was to test the system.

Data Collected

Flight Session 1

The first flight test session was March 28th, 1999. The goal was to work out any problems. Angles and distances were taken but I did not use the plot board or the math equation on the field.

Weather was a breeze from the northwest. I had three other members of our club help with launching, tracking and recording data.

The angle finders were set up and calibrated along the 200' baseline. Tracker white was set-up adjacent to the launch pad and tracker yellow was 200 feet to the northeast.

Four flights were launched. Flight 1 was a single-stage kit on an A8-3 using streamer recovery. The model could be seen by both trackers as it fell.

Both angle finders tracked flight 1 to the landing location. One problem was found: the dowel that sticks-up from the angle finder disk got in the way.

Angles from both trackers were recorded. The model was easy to find. I measured the distance to the rocket from the White Tracker to the tip of the nose cone. The model landed 133' 2" away from the tracking station.

Flight 2 was an Estes ready to fly model on a 1/2A3-4T motor. Both angle finders were checked to make sure they read zero between each tracker. The model was launched and fell near the east tracking station into tall grass.

I went to find the model but could not see it in the tall grass. The people at each tracker used walkie-talkies to guide me to the landing spot. This put me a few feet away from the model. Without this help, the model would have been lost in the grass. The landing distance was measured as 209′ from the white (pad) tracker.

After flight 2, both tracking stations were calibrated for the next flight.

Flight 3 was another Estes model on a 1/2A3-4T motor. The model landed close to the yellow tracker. The measured distance was 184′ 4″.

Flight 4 was an Estes Alpha flown on an A8-3 motor. The model was angled farther downrange than the first three test flights.

The model was launched and landed. Angles were found and recovery volunteer went out to look for the model. The rocket was easily found. The distance to the white tracker was measured and the gear was packed away.

After the flights, I used a plot board to estimate the distance from the pad tracker to the rocket. Then I used the math equation to figure out the math prediction. Then all of these numbers were put into a computer spreadsheet and error percentages were calculated.

This is a summary of the data from session 1:

Session 1							
Flight	Yellow Tracker	White Tracker	Actual Distance	Plot Board Est.	Error	Math Prediction	Error
1	42	51.5	133.2	134	-0.6%	134	-0.6%
2	96	11	205.7	209	-1.6%	208	-1.1%
3	55	5	184.3	189	-2.5%	189	-2.5%
4	73	74	350.0	338	3.4%	351	-0.3%

I observed that some of the error numbers were different for the plot board but that all the errors were pretty small.

I decided to fly more models and use a plot board on the field to estimate the distance to the model.

One of the goals of this project was to make it easy to find your rocket. Every time you go to fly, you're not going to have a tape measure with you. It is possible to know how many feet away your rocket is by walking a certain number of paces?

I walked the 200' baseline distance four times and got an average of 85 paces. This gave me a division answer of 2.3 feet per pace. I decided to put this to the test in session 2.

Flight Session 2

The second flight session was on April 17th, 1999. The weather was calm winds and blue sky. The field set-up was the same as session 1.

Changes had been made in the angle finders. The dowels had been sanded down so they didn't block the view of the rocket as it landed.

For this flight session, I had three helpers to track the rockets as they landed. Seven rockets were launched.

Flight 1 was a single stage model flown on a B6-4 motor. It landed close to the pad.

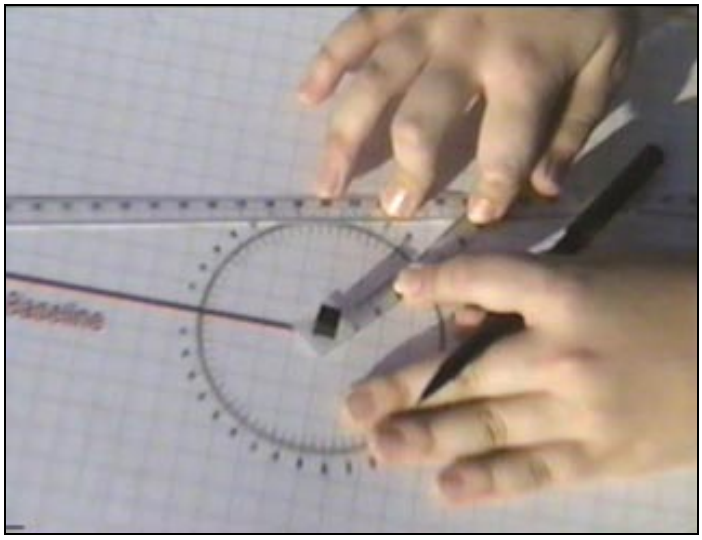

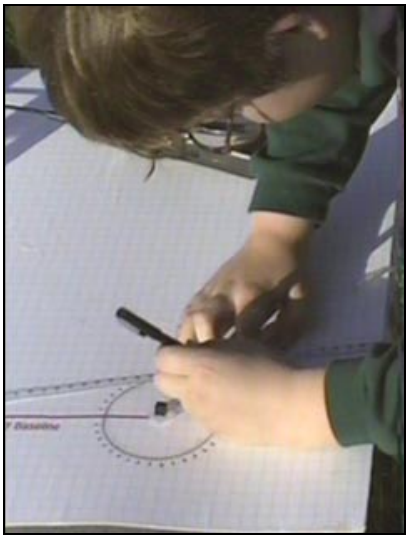

These pictures show when I was using the plot board to calculate the distance from the pad tracker station to the rocket.

After the launch, the trackers read their angles and I plotted them on the plot board that had been brought to the field.

Flight 1's estimated distance from Tracker White was 39 feet. The measured distance was 37 feet 10 inches. I did not try to use paces since this flight landed so close.

Flight 2 was a single stage parachute model on an A10-3T motor. The predicted distance from the pad was 142 feet. On this flight, I tried using paces to measure the distance to the rocket. I used a calculator to figure out that I had to walk 61 paces to get to the landing point of flight 2. When I did, the rocket was only a few steps away! The measured distance was 143 feet from track west. This was a 1 foot margin of error from the plot board prediction.

Flight 3 was another single stage model. The plot board predicted distance from the pad was 280 feet. The actual distance was 297 feet, a 17 foot margin of error. For this flight I was about five paces off.

On Flight 4 the model was lost because of both trackers lost sight of the model at ejection.

Flight 5's predicted distance from the pad was 95 feet. The actual distance from the pad was 97 feet. I was less than two paces off from the predicted location of the rocket.

On flight 6, the predicted distance was 58 feet. The measured distance was 62 feet. I again used paces and came within a few steps of the rocket when walking along the angle from the White Tracker to the rocket.

Flight 7 landed a few feet away from the white tracker. This flight was so close to the pad no calculations were done.

After flying, I used the math equation to find out the math prediction for the rocket landing spot. All the data was put into a computer spreadsheet so errors could be figured.

The following is a table of the flights of our rockets from Session 2, flights 1-7:

Session 2							
Flight	Yellow Tracker	White Tracker	Actual Distance	Plot Board Est.	Error	Math Prediction	Error
1	8	127	37.8	39	-3.1%	39	-3.1%
2	37	84	142.0	143	-0.7%	140	1.4%
3	89	48	280.0	297	-6.1%	293	-4.6%
4	Lost Track						
5	14	16	97.0	95	2.1%	97	0.0%
6	6	16	62.0	58	6.5%	56	9.7%
7	Too Close to Measure						

I wondered if there was a pattern to the errors. The math prediction and plot board estimate seemed to depend on how far away the landing location was from the trackers.

It was also looking like using paces instead of a measuring tape was a good idea.

Possible conclusions from this session were the closer the rocket to launch pad, the higher the percent margin of error there would be because the distances were short. The farther away from the trackers, the estimates would be off because of eyesight and the accuracy of the angle finder disks.

I needed to test these conclusions in third flight session.

Flight Session 3

Session 3 was on April 24th, 1999. Weather was a light wind from the west. The sky was clear.

The goals of this session were to improve the angle finding system and see if there was a pattern to errors between predicted and actual distance. Another goal was to test the paces system and the method of being talked-into location by people on radios.

Flight 1 was a ready-to-fly model on an A10-3T motor. Angles were recorded. Tracker Yellow reported 38 degrees. Tracker White reported 71 degrees. The plot board prediction done on the field was 134 feet. The math prediction was 130 feet.

I decided to use the paces method of finding this flight.

When walking toward the model, I had someone tell me by radio if I was walking too far to the left or the right. By staying on course and counting my paces, I was only 2 paces off when I found the rocket!

Using the "talking-in" method with the angle finders made finding the rocket much quicker than using a measuring tape. After locating the rocket, I measured the distance back to Tracker White as 130' 7".

Flight 2 was an Estes kit flown on a D12-3 motor. Tracker yellow reported 34 degrees. Tracker white reported 24 degrees. The plot board prediction was 130 feet. This gave me an estimate of 56 paces to the rocket from Tracker White.

The actual distance to the landing point of flight 2 was 142 feet which was 12 feet off from the plot board prediction. I was 5 paces off. The error on this flight may have been because the model had a really long shock cord and one tracker may have found the angle to the parachute while the other may have sighted on the body.

Flight 3 was a single stage model on an A8-3 motor. The model landed far away from the launch area in tall grass.

Tracker Yellow recorded 94 degrees. Tracker white recorded 39 degrees. The plot board prediction was 275 feet. The actual measured distance was 285 feet. Using the paces system here I was about 5 paces off.

Flight 4 was a single stage model on a C6-3 motor. Tracker Yellow recorded 27 degrees. Tracker White recorded 135 degrees. The model landed in a large clump of grass. A helper was talked-in on the angle and the model was located. The rocket was so far down in the grass that it would have been lost if not for this system.

Flight 5 was a single stage model on a 1/2A3-4T motor. Tracker Yellow recorded 29 degrees. Tracker White recorded 32 degrees. I used the system of walking a certain paces to the rocket instead of measuring. The plot board and my calculator showed that I had to walk 45 paces to get to the rocket. The model was actually 108 feet away. This put me within one pace of the rocket!

Flight 6 was a single stage model on an A3-4T motor. Tracker Yellow recorded 111 degrees. Tracker White recorded 25 degrees. On the recovery of this model, another helper and I talked my sister in on the angles using radios and hand signals. After a few minutes, she was right on the point where both angles crossed and she was almost stepping on the rocket!

A summary of flight session 3:

Session 3							
Flight	Yellow Tracker	White Tracker	Actual Distance	Plot Board Est.	Error	Math Prediction	Error
1	38	71	130.6	134	-2.6%	130	0.4%
2	34	24	142.0	130	8.5%	132	7.0%
3	94	39	285.0	275	3.5%	273	4.2%
4	27	135	276.0	270	2.2%	294	-6.5%
5	29	32	108.0	103.5	4.2%	111	-2.8%
6	111	25	272.0	259.9	4.4%	269	1.1%

In flight session #3 I learned a lot about how to make triangulation practical as a method for finding your rocket.

I felt like enough light testing had been done to make conclusions.

Conclusions

When I started this report, I wondered if triangulation could help find a rocket's landing point.

I learned that it is possible to use math equations and angle finders to figure out a rocket's landing location. This requires two trackers to see the model as it lands.

I also learned that you can make a scale plot board of your flying field and get an estimated location of your rocket by using rulers to trace the angles from two tracking stations at the end of a known baseline.

There is a margin of error every time you fly a rocket and use this system. It is unavoidable but still the system works pretty darn good!

The margin of error is usually a few feet in rockets that land close to the trackers. In the rockets that land far away from the trackers there is a larger margin of error.

During this project I developed a system of finding where your rocket is based on pacing the distance to the rocket. By using paces it was faster than using a measuring tape (that gets caught on twigs).

When measuring your paces to the rocket it is important to have someone tell you if you are walking a straight line to the model. This is because it is easy to get off course when walking toward the model.

To have someone "talk you in," a helper has to stand behind Tracker White and talk on a radio to you. They say "left" or "right" to tell you how to stay on the correct angle as you pace off the distance to the rocket. This is like the way people use a compass at contests but the "talking in" method is easier and faster.

I formed the conclusion that talking a person in on the angles was the simplest way to use this system. It is fairly accurate and doesn't involve any measuring or use of math.

When using the plot board there is a certain margin of error because the scale is hard to read. By talking the person in on radios or by using hand signals, if the angles were recorded correctly, you can guide the recovery person almost on top of the rocket.

This system is cheap and easy to use. It is easier than walking around for a long time looking for your rocket.

Summary

This project was about coming up with an easy way to find where your rocket lands.

The process and mathematics of trianglulation was researched and a system was developed to track models as they landed on a flying field. Two angle finder disks were made to calculate angles between a measured baseline and the apparent landing point of the rocket.

A scale plot board was created. The angle finder data from several flights was used to pinpoint the rocket's estimated landing point. A scale ruler on the plot board gave the estimated distance to walk to get to the rocket.

A total of 17 flights were flown to get an accurate picture of the best way to triangulate on a rocket.

It was concluded that "talking a person in" using radios or hand signals was the fastest, best way of finding rockets. A recovery person paced-off the distance to the estimated landing point. One or two helpers gave instructions to make sure the recovery person stayed on the correct angle(s) toward the rocket.

The next best way was to use a measuring tape to measure the distance from a tracking station to the rocket. This is more accurate than using paces but takes longer.

Of the 17 flights flown in this project, only one was lost when both trackers lost sight of the model. However, several models that would have been lost were found because of this system.

Triangulation is an easier way to find where your rocket lands than wandering around for hours on a flying field looking for your model.

The cost of this project was about $40 for engines, parts for the angle finders, radio batteries and supplies.