PEAK OF FLIGHT

NEWSLETTER

ISSUE 406 | DEC 15 2015

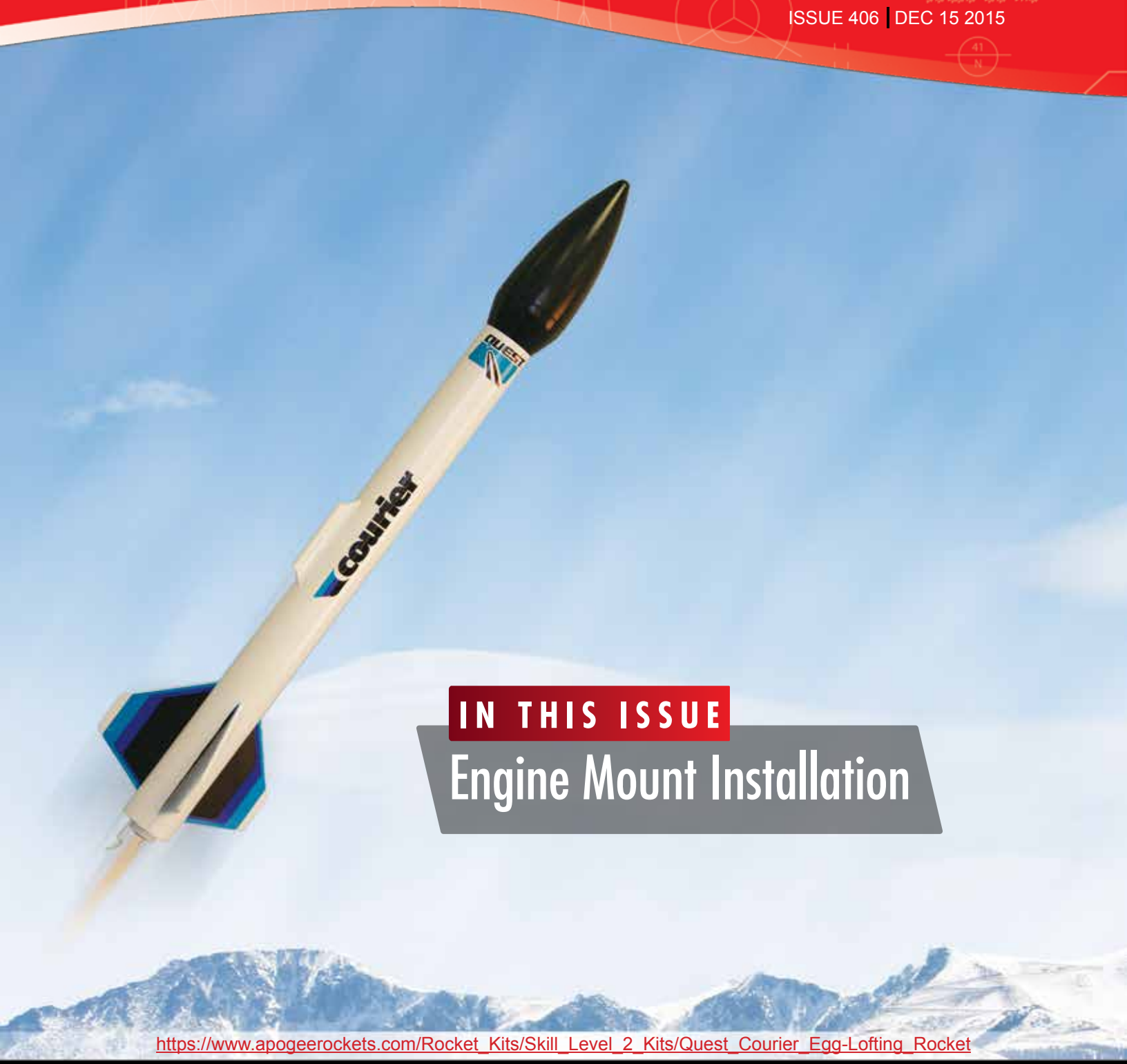

IN THIS ISSUE

Engine Mount Installation

https://www.apogeerockets.com/Rocket_Kits/Skill_Level_2_Kits/Quest_Courier_Egg-Lofting_Rocket

Apogee Components, Inc.
Your Source For Rocket Supplies That Will Take You To The "Peak-of-Flight"
3355 Fillmore Ridge Heights Colorado Springs, Colorado 80907-9024 USA
www.ApogeeRockets.com e-mail: orders@apogeerockets.com Phone: 719-535-9335 Fax: 719-534-9050

APOGEE COMPONENTS

PEAK OF FLIGHT

Engine Mount Installation

By Tim Van Milligan

Since I've been around a long time in model rocketry, I've seen a lot of poorly constructed rockets. Typically it is the fins that aren't glued on properly, but I've seen a fair number of examples where the engine mount wasn't glued into the tube correctly. That is what I want to cover in this article.

The engine mount is a collection of parts that center the rocket engine within the tube of the model, and hold that engine in place so that it can't shift either forward or backward. It typically consists of an engine mount tube, two centering rings, and some sort of engine retention device. For small model rockets, that engine retention device is an engine hook along with an engine block that is glued in front of the rocket motor.

This article assumes that the engine mount is built, but is not installed in the rocket tube itself. The only thing that I would mention here is that before you build the engine mount, make sure that you position the aft centering ring far enough from the back end of the engine mount tube so that you can easily bend the engine hook upward. I've seen a lot of kids build rockets where they put that aft ring on the back of the engine mount tube flush with the edge. Since it holds the engine hook in place, it doesn't really have enough room to allow the hook to be bent upward to allow the rocket motor to slide into the tube.

I typically put that aft ring no more than 1/2" (12.7mm) from the end of the tube. I also position the engine hook so that the back end of the hook will hang out the rear end by 1/2" (12.7mm). To get this position, I cut the slot for the front tang of the hook at 2-1/4" (57.2mm) from the rear of the tube. **Figure 1** shows the example dimensions for the engine tube that I use when I design a new rocket.

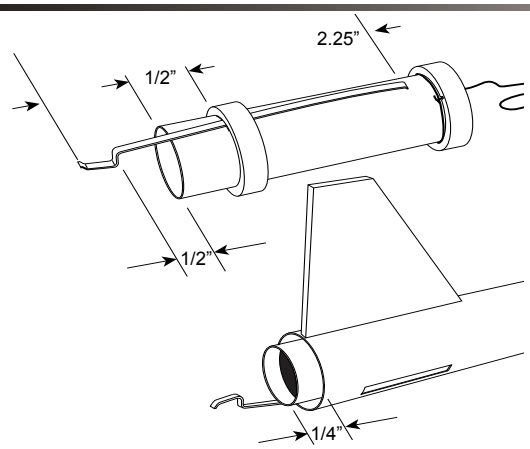

Figure 1: Engine tube dimensions example

Once the engine mount is assembled and all the glue has dried, it is ready to go into the main body tube of the rocket.

Step 1: I like the engine tube to stick out the back end of the rocket a little bit. The reason is that I want to make sure there is enough room for the engine hook to be bent backwards and it doesn't interfere with the end of the body tube. I like to have a minimum of 1/4" (6.4mm) of the engine mount tube sticking out of the rear of the main rocket body tube. The further it sticks out, the easier it is to bend back the engine hook with your thumb. But too far out, and it just increases the drag on the model. Mark the "stick-out" length on the engine tube as shown in **Figure 2.**

Step 2: Lay the engine mount next to the main body tube. Position it so that the marked line (for the stick-out length) is at the aft end of the body tube of the rocket. What we want to visualize here is where the position of the rings will be inside of the body tube. This is where the glue needs to go when the rocket is assembled.

Figure 2: Mark the "stick-out" length

Continued on page 3

About this Newsletter

You can subscribe to receive this e-zine FREE at the Apogee Components website **www.ApogeeComponents.com**, or by clicking the link here Newsletter Sign-Up

Newsletter Staff

Writer: Tim Van Milligan
Layout/CoverArtist: Chris Duran
Proofreader: Michelle Mason

Engine Mount Installation

Continued from page 2

I like to put the line a little bit on the short side, because I want to make sure that the forward ring on the engine mount will slide through the glue line.

Step 3: Get a wood dowel to help you spread glue deep inside the rocket. I like to pre-mark the dowel with a pen to show how deep the dowel needs to be inserted into the rocket to place the line of glue (see **Figure 3**).

Figure 3: Pre-marked dowel

Step 4: Squeeze some glue on the tip of the wood dowel. I like to spin the dowel in my fingers to keep the glue from sagging and dropping onto the table. An alternative to using a dowel is to use a Q-tip. My good friend Chris Michielssen of Odd'l Rockets likes to use a Q-tip, probably because it acts like a sponge and can hold more glue than what you can get on a wood dowel. For me, I'd probably use them if I had more of them lying near my work table (see **Figure 4**).

With the glue on the tip of the dowel, carefully make a line of glue around the inside perimeter of the tube. Use the mark on the dowel to know how far to insert it into the tube.

If you slide the engine mount at this point into the glue, you won't have any glue on the back ring. A lot of younger modelers will put glue on the back ring of the engine mount assembly, and simply slide the whole thing into the tube. But what happens is that the edge of the tube simply wipes off the glue as it goes into the tube, and there is no fillet in front of the ring to give it strength. At this point, only the front ring would be grabbing and holding the engine mount in place. You need glue on both rings for a strong glue joint.

Step 5: Once the ring of glue is around the inside of the tube, slide the engine mount partially into the tube. But not too far that the front ring gets into the glue you put deep in the tube (See **Figure 4**). If you do, you'll often end up with a stuck engine mount tube because the glue "grabbed" too quickly. And then you have to wiggle it back and forth to get it unstuck. If you didn't allow the glue to dry on the rings attached to the engine mount tube, you might have a worse situation where they come off the tube

Figure 4: Slowly inserting engine mount

Continued on page 4

Engine Mount Installation

Continued from page 3

and get stuck inside the rocket. This nightmare situation has happened to me plenty of times when I was in a hurry to get the rocket built.

So ideally, you want to stop sliding the engine mount tube before it gets to the ring of glue inside the rocket. This is why it is also important to make sure to be neat when you apply the glue ring in the first place. If there were any drips inside the tube while you created the ring of glue, you could hang up on them too.

Step 6: Tilt the engine mount to one side. The purpose of tilting it to one side is so that you can use a small dowel to apply a second line of glue inside the body tube of the rocket. This can be seen in **Figure 5**. For small diameter rocket, like 24mm diameter (BT-50 size) and smaller, you'll need a smaller diameter dowel.

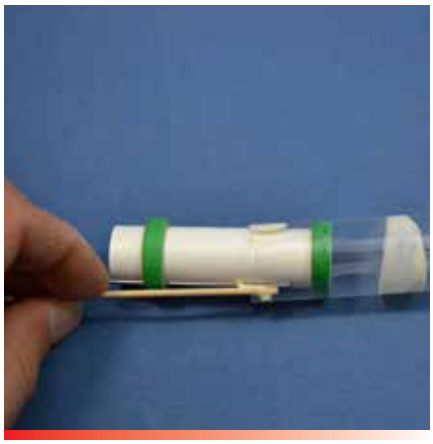

Figure 5: Applying second line of glue with a smaller dowel

This step is kind of tricky, as you have to keep tilting the engine mount in different directions until you can make a complete ring of glue just inside the tube. You do have to work fairly fast, because the previous line of glue is starting to evaporate and the moisture in the glue is being wicked into the fibers of the paper body tube. What this means is that the first glue ring is getting thick the longer you have it sitting there. If it gets too thick, it will grab and freeze the part in place too soon as you begin sliding the engine mount into the tube. I like to make that forward ring a little heavier with glue because of this. I want to keep it fairly runny so that it lubricates the inside of the tube as you slide the engine mount forward.

Figure 6: Spreading the second ring of glue

Figure 6 shows what the second ring of glue should look like when you get it done.

Step 7: Slide the engine mount forward so that both rings are in the middle of the glue lines.

While you won't see this because your tube is not see-through, **Figure 7** shows what the glue joints should look like. Notice that there is a built-up line of glue in front of both of the centering rings. This is what you want, as it means that the parts will be

Figure 7: Once the engine mount is completely inserted

Continued on page 6

Save $4 or more on the award-winning large-format

Year In Space 2016 Wall Calendar

$13.95 *or less*

FREE U.S. Shipping!

- Large 16" x 22" when open
- 12 monthly in-depth topics
- Monthly planet viewing guide
- Over 120 space images
- Space history dates & trivia
- Daily Moon phase graphics
- Over 100 night sky events
- Room for notes & appts
- **Perfect for any age**
- Money-Back Guarantee
- Published in cooperation with *The Planetary Society*

Discount Pricing for *Peak of Flight* readers

Use the "Internet" discount and pay less than the $17.95 retail price:

- 1 copy **$13.95**
- 2+ copies* @ **$12.95**
- 10+ copies* @ **$11.95**

**Shipped to the same address*

Order yours now at YearInSpace.com

Engine Mount Installation

Continued from page 4

the strongest.

To be honest, applying the glue like this does take some practice. It can be fairly messy as the glue drips off of the wood dowel as you are trying to install it. The process is worse on smaller diameter tubes too, because you can't tilt the tube far enough over to use a big glue-laden dowel into the tube. If you have to use a small dowel, you just can't apply much glue at any one time.

Figure 9: Plenty of glue slips past for the next ring

Simplifying the Process

As I was writing this article, I was trying to think of a way to simply the process. Especially for younger modelers that don't have their fine motor skills developed yet. It is hard to manipulate a dowel when you have too many thumbs - if you know what I mean.

The modeler can't make both rings of glue inside the tube before sliding the engine mount in because the front ring would just push all the glue forward. And then the back ring wouldn't have enough glue on it to hold it in place.

Figure 8: Toothed front ring design

But that gave me an idea. What if you could apply both rings of glue inside the tube before you put the engine mount in? Wouldn't that be simpler?

From that, I got this idea of changing the front ring on the engine mount tube. I thought that if it was made with some teeth in it, you could slide the whole assembly in straight without having to tilt it over to one side (**see Figure 8**).

What happens when you have a toothed front ring is that it doesn't push all the glue from the aft line of glue. It kind of glides through it and leaves enough in place for the aft ring to be glued in place. You can see this in **Figure 9**.

In **Figure 10**, where both rings are in the correct position in the tube, you can see that there is glue pushed up in front of both the forward and aft rings. This in an indication of a good glue joint.

Using this toothed ring is no different from a normal ring. It is applied the same way to the engine mount tube as a solid ring. The big advantage, as mentioned previously, is that you can make both lines

Figure 10: A good glue joint has glue in front of both the forward and aft rings

Continued on page 7

Rocket Jewelry

- The Perfect Launch-Range Accessory
- Subtle, Tasteful, Fashionable & Distinctive
- Makes A Great Gift for Family and Friends
- Display Your Passion for Rocketry

https://www.apogeerockets.com/Wearables

Engine Mount Installation

Continued from page 6

of glue inside the perimeter of the tube at the same time. This speeds things up, and minimizes the mess inside the tube.

If you would like to try out these new toothed centering rings on your own models, we are now selling them at Apogee Components at: https://www.apogeerockets.com/Building-Supplies/Centering-Rings/For-24mm-Body-Tubes/Forward-Grooved-Centering-Ring-18-24. As mentioned, these would be good rings to use if you are working with younger modelers and you want to speed up the assembly process.

It should be noted that the back ring still has to be a solid ring, and not toothed like the front one. The reason is that because of the gaps in the front ring, some of the pressure from the ejection charge will want to go through the tooth channels and try to get out the back of the tube instead of pushing off the nose cone. The back ring has to be solid so that it can seal off the tube end and keep all the ejection pressure going out the front end.

If your rocket has any opening in the rear centering ring, then the front ring must be solid. An example of this is the EggStorminator rocket https://www.apogeerockets.com/Rocket-Kits/Skill-Level-4-Model-Rocket-Kits/EggStorminator kit with holes in the back ring (see **Figure 11**). In this situation, the engine mount is assembled differently. The back ring is not glued onto the engine mount tube until later in the sequence of construction.

About the Author

Tim Van Milligan (a.k.a. “Mr. Rocket”) is a real rocket scientist who likes helping out other rocketeers. Before he started writing articles and books about rocketry, he worked on the Delta II rocket that launched satellites into orbit.

He has a B.S. in Aeronautical Engineering from Embry- Riddle Aeronautical University in Daytona Beach, Florida, and has worked toward a M.S. in Space Technology from the Florida Institute of Technology in Melbourne, Florida. Currently, he is the owner of Apogee Components (http:// www.apogeerockets.com) and the curator of the rocketry education web site: http://www.apogeerockets.com/educa- tion/. He is also the author of the books: “Model Rocket Design and Construction,” “69 Simple Science Fair Projects with Model Rockets: Aeronautics” and publisher of a FREE e-zine newsletter about model rockets.

Figure 11: EggStorminator Aft End

Electronics Hardware Installation Kit

Think of the convenience of getting everything to professionally install your dual-deployment or other electronic payload into a e-bay of your rocket!

Includes: nylon stand-offs, screws & nuts, wire, push-switch, drill & tap, ejection charge cannisters, barrier strips, wire ties, and step-by-step DVD instructions.

https://www.apogeerockets.com/Electronics_Payloads/Electronics_Accessories/Electronics_Mounting_Kit

www.ApogeeRockets.com