ISSUE 103, MAY 16, 2003

APOGEE

PEAK OF FLIGHT

NEWSLETTER

Team America Rocketry Challenge Ends With A Roar!

What is Base Drag? And How Is It Determined?

APOGEE COMPONENTS

1130 Elkton Drive, Suite A
Colorado Springs, CO 80907 USA
www.ApogeeRockets.com
orders @ApogeeRockets.com
phone 719-535-9335 fax 719-534-9050

ISSUE 103, MAY 16, 2003 APOGEE
PEAK OF FLIGHT

Determining Rocket Base Drag

By Tim Van Milligan

Timothy Doll writes:

"While reading your latest e-zine article about quick and dirty Rocksim simulations, it got me thinking about what is the currently accepted Drag Coefficient for a high performance rocket?

30 years ago, there was something of an ongoing debate on the question. Wind tunnel data had suggested a C_d of around 0.7 for a 'clean' rocket. However someone else contended that the engine exhaust - both from the engine propellant and the smoke/delay charge - would help fill the 'base' of the rocket, sharply reducing the base drag. Wind tunnel data, with the base of the rocket 'filled' with a backwards nose cone, came up with a C_d of around 0.5. At the time, I was a believer in the 0.5 C_d for a clean rocket, at least if the body diameter was not much larger than the engine diameter (and I did get some decent correlation between the crude altitude simulations we did back then and actual tracking data). So what is the 'current' answer? Does Rocksim give any credit for the engine exhaust filling the base of the rocket?"

Let's answer the easy question first: RockSim does calculate base drag. You can find it by going to the C_d Analysis screen to see what it comes up with.

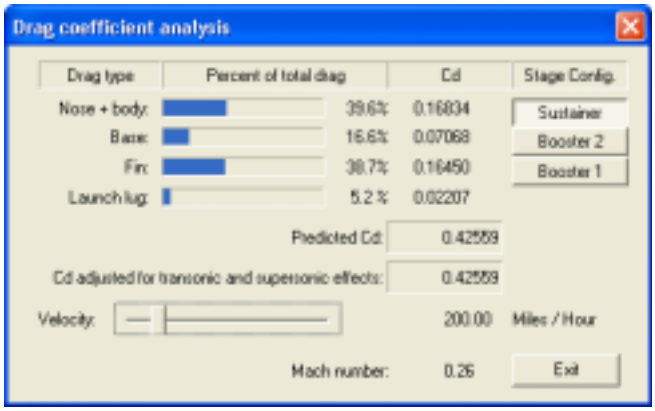

Figure 1: RockSim Cd analysis for an Estes Alpha. The base drag determined is: 0.0768

What is Base Drag?

Base drag occurs when the air (boundary layer) flowing over the rocket becomes separated from the rocket when the flat base is reached. In other words, the air doesn't easily flow around the corner, so it creates a vacuum region behind the rocket. This low pressure region tries to suck the rocket rearward. And as you know, if you have a force acting rearward, you have what is commonly refered to as "drag." In this particular case, it is called "base drag."

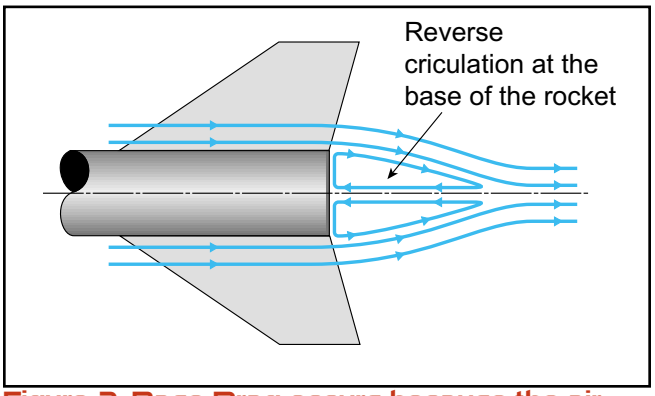

Figure 2: Base Drag occurs because the air can't easily flow around corners at the bottom of the rocket.

It pretty much stands to reason that a larger diameter rocket will have a greater base drag component than a skinnier model. It really becomes significant, and if you want a high flying model, this should be reduced as much as possible. Figure 3 shows a RockSim C_d analysis of a Fat Boy rocket. Compare this to Figure 1, and you can see the base drag is a higher proportion of the overall drag that acts on the model.

OK, I know what you're thinking, how come the overall C_d of the Fat Boy is smaller than the Alpha? It is a quirk of the DATCOM formulas. They are biased toward rockets with low

Continued on Page 3

About this Newsletter

You can subscribe "FREE" to receive this e-zine at the Apogee Components web site (www.ApogeeRockets.com), or sending an email to: ezine@apogeerockets.com with "SUBSCRIBE" as the subject line of the message.

Base Drag

Continued from page 2

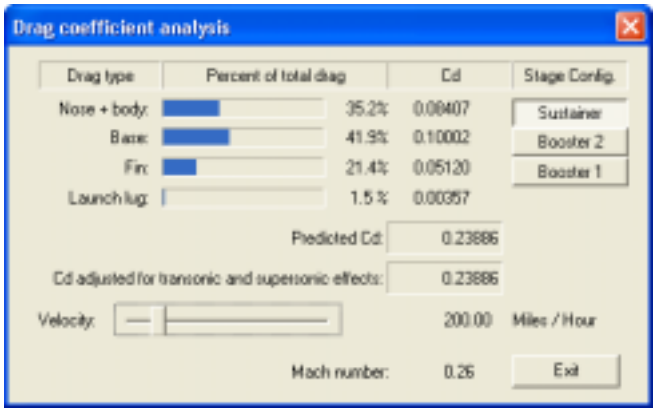

Figure 3: The large diameter of the estes Fat Boy rocket has a greater base drag number.

surface areas as it relates to its diameter. That is why I've been recommending the people also use the AeroCFD software to confirm the number for the most accurate simulations.

Base drag also plagues large rockets too. The base drag on the Saturn 1B was so large, that engineers put turning vanes around the perimeter of the rocket to help turn the air to fill the vacuum. You can see this in photos on the bottom of the rocket shown below. How effective is this? I don't know, but they are interesting. I wasn't able to find any information about them. They may also be used to keep the exhaust gases from being sucked against the base of the rocket???

It didn't take rocketeers very long to figure out that one way to reduce base drag is to put a boattail on the back end of

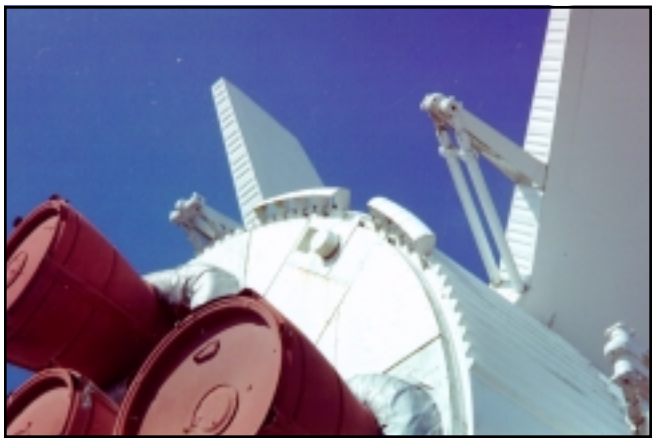

Figure 4: The turning vanes on the edges of the Saturn 1B are used to alliviate some of the base drag problems.

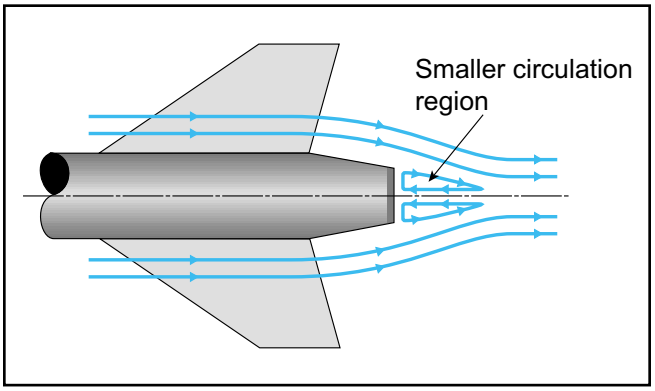

Figure 5: Adding a boattail, reduces base drag.

the rocket. This reduces the low pressure region in the back of the rocket. The smaller this region, the lower the base drag. This can be seen in Figure 5.

How is Base Drag Computed?

The way RockSim determines the base drag coefficient is by using the DATCOM method. This is a semi-emperical method that give "ballpark" numbers. By semi-emperical, that means that you determine the drag for each component individually (nose, body, fins, base, etc) and add them all up.

If you are familiar with the booklet *Aerodynamic Drag of Model Rockets* by Dr. Gerald M. Gregorek (Estes TR-11), you have already been aquinted with this method. It does give reasonable results, which has been proven time and time again by numerous rocketeers using the RockSim software. If it didn't work well, the simulation results wouldn't be trustworthy. But most modelers have come to the conclusion that RockSim is generating results that can be used to give excellent flights.

In the emperical equations, the base drag coefficient is

Continued on Page 4

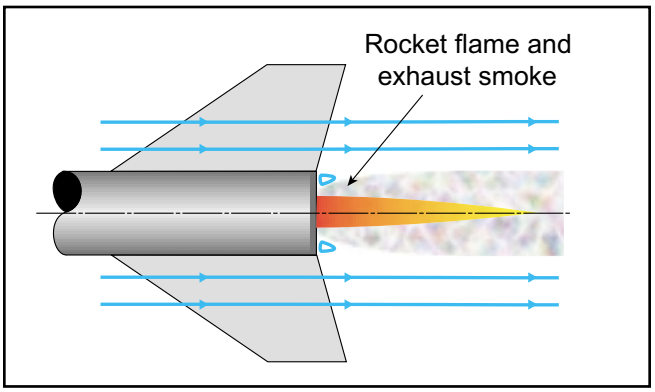

Figure 6: Everyone assumes that when the motor fires, the base drag goes to near zero. Is this true?

Base Drag

Continued from page 3

determined from the nose cone and body tube drag coefficients. It is really independant of the shapes of either, which is why the number is a "ballpark" number.

The AeroCFD software calculates the base drag two different ways. The first way is the DATCOM method, just like RockSim. This is easy to do, and yields quick results. See Figure 6 for the results of the Alpha model.

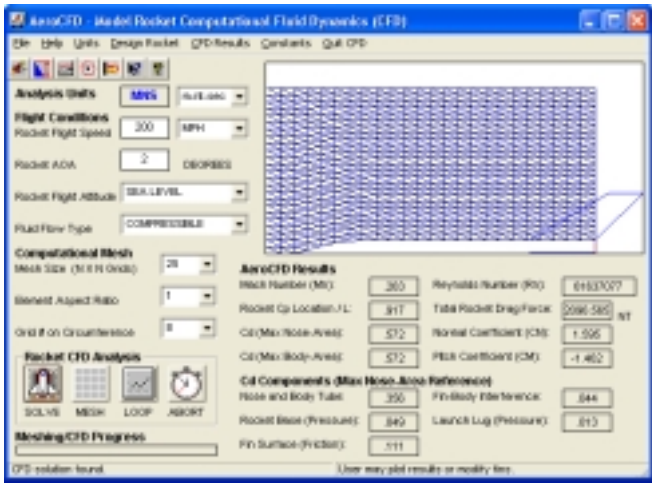

Figure 6: Using the DATCOM method, AeroCFD computes the base C_d at 0.049. When you run a full-blown CFD analysis (Figure 7), this number will change.

For a more detailed look into the results, the second AeroCFD method is used. It is a full-blown Navier-Stokes analysis of the base region. The downside is that running this takes a lot of time (about 4-5 minutes on a 800 Mhz computer). Once these computations are completed, the results are swapped out for the quick-and-dirty emperical method. For comparison, the results of the Estes Alpha are shown in Figure 7. So when you're done, you'll have the most accurate Cd analysis that is currently possible.

Another thing of interest shown in Figure 7 is the flow picture shown in the bottom left corner. The little black line in the corner is the base of the rocket. You can see, directly to the right of this line, that the flow decreases drammatically. This is the base drag in graphic form.

What about Rocket Exhaust?

The last question to answer is how does the base drag change when the rocket motor is firing?

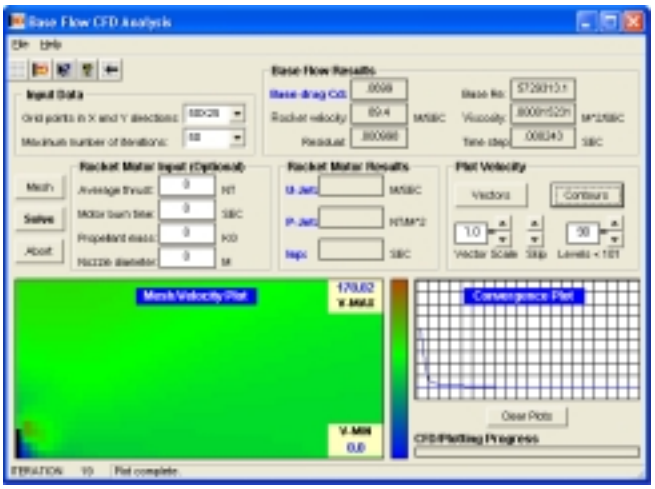

Figure 7: CFD analysis of the Alpha model. Here the base drag C_d was computed to be 0.0699

For this, we again can go back to the full-blown CFD analysis that is provided by AeroCFD. You can enter the parameters of the motor, and AeroCFD will compute the new C_d value. This is shown in Figure 8.

In this case, the reduction in base drag was pretty miniscule.

Why? Isn't the common assumption that the base drag will go down significantly?

The reason why is doesn't decrease much is that the jet flow out the nozzle is very needle-like because of the small diameter of the C6 rocket motor. If the nozzle exit diameter were equal to the base diameter of the rocket, then the base

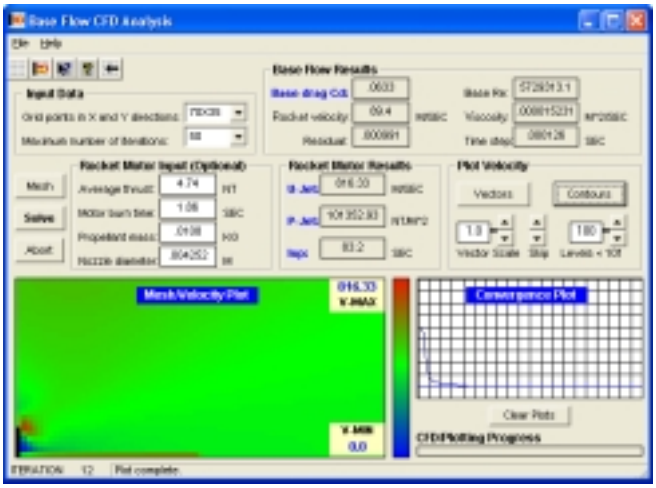

Figure 8: When the engine fires, the base drag does go down. But how much is determined by the rocket motor's nozzle diameter.

Base Drag

Continued from page 4

drag would go down to zero when the motor was firing. But because the nozzle diameter is significantly smaller than the base of the model, the air flow still has to turn the corner and fill the back side of the rocket. The airflow looks more like Figure 9 than what we expected in Figure 6.

Conclusion

Base drag is a complicated subject. The intent of this article was not to be a end-all techincal analysis of the subject, but a generalized discussion. The AeroCFD software is one tool you can use to explore the topic more indepth.

You can get more information about AeroCFD from our web site at: http://www.ApogeeRockets.com/AeroCFD.asp

About the Author:

Tim Van Milligan is the owner of Apogee Components (http://www.apogeerockets.com) and the curator of the rocketry education web site: http://www.apogeerockets.com/education. He is also the author of the books: "Model Rocket Design and Construction," "69 Simple Science Fair Projects with Model Rockets: Aeronautics" and publisher of the FREE e-zine newsletter about model rockets. You can subscribe to the e-zine at the Apogee Components web site, or sending an email to: ezine@apogeerockets.com with "SUBSCRIBE" as the subject line of the message.

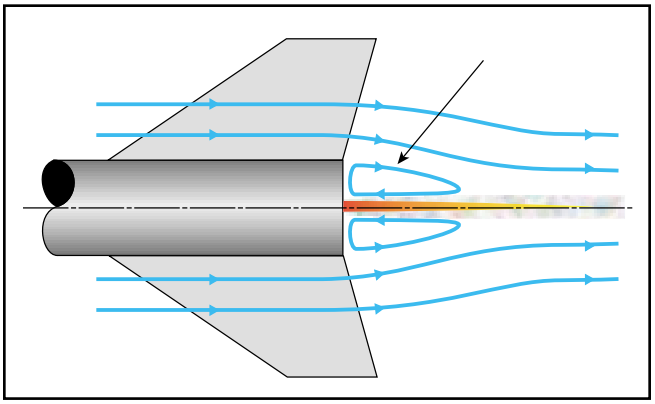

Figure 9: The base drag when the motor is firing does not go to zero as we predicted in Figure 6. The amount of jet is small compared to the base area of the model.

Do You *REALLY* Want To Know The Efficiency Of Your Latest Rocket Design?

When your design is important, then you need to use AeroCFD. It gives you new methods to find the CP and C_d of your rocket. It takes the guesswork out of simulations, because it determines the these parameters using a technique called "Computational Fluid Dynamics." But it displays the results that are easy to understand for the average rocketeer.

When results count, remember to use the new AeroCFD!

AeroCFD

Apogee Components

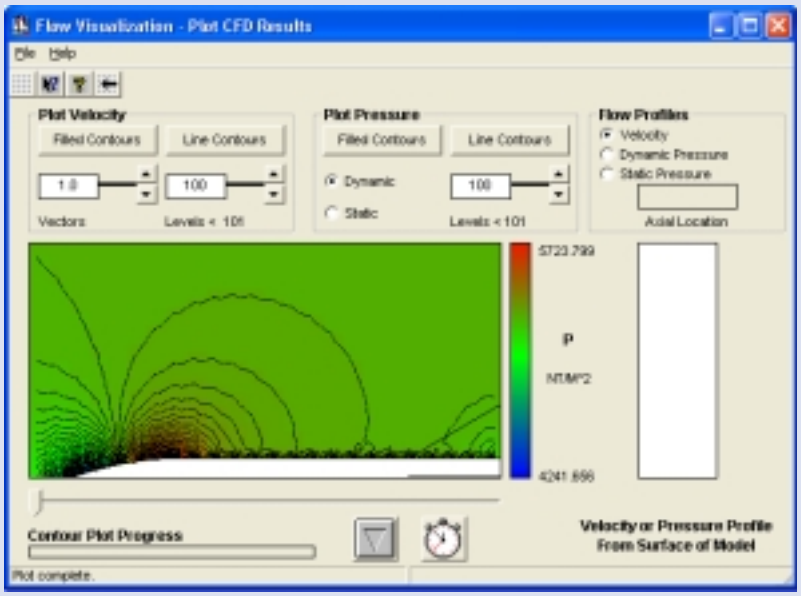

To order your own copy, please visit:
http://www.ApogeeRockets.com/AeroCFD.asp

Team America Rocketry Challenge Energizes America's Rocket Clubs

By Tim Van Milligan

Last weekend, the finals of the Team America Rocketry Challenge were held outside of Washington D.C. The results had a profound impact on me; much stronger than I would have thought. I was very very impressed by the whole thing.

The event hosted the top 101 teams from every corner of the country. They got there by having the best qualification flights out of the 850+ teams that took part in the overall contest. It should be noted that another 200+ teams were turned away from the contest due to late registrations, or problems getting altimeters. When it started, they had a goal of getting 50 schools to compete. So getting nearly 1000 to show interest is mind boggling. This was a massive event that took everyone by surprise.

By far, it was the largest rocketry contest ever held. There were at least 1000 individual team members competing. There were about another 100 or so volunteers from the NAR and A.I.A. and hundreds of parents and spectators watching. And it all came off without a hitch -- except that it rained on and off all day long.

First of all, it was very well planned out, and executed superbly. Trip Barber was the "contest director," and he did a magnificent job putting it all together. It was timed and executed so well, that even though it rained on an off throughout the day, the event ended on time. This was important, because of the numerous high level dignitaries that were scheduled to speak at the awards ceremony. This included the Chairman of Lockheed Martin, the director of Marshall Space Flight Center, The director of NASA, and Senator Mike Enzi.

Second, I was impressed by the work of the staff at the Aircraft Industry Association (AIA). First of all, they were able to come up with the enormous prize pool - over $59,000. Second, they got a whole lot of press coverage for the event. I saw television crews from CNN, CBS, and the Discovery Channel. Plus, there were hoards of other reporters running around all over the place taking pictures and interviewing students. Finally, I was envious of the way they were able to promote the event to the teachers and students. I've been trying for years to get teachers to get more involved with rocketry. Within a few months, these people created a fire-storm throughout the country. I wish that Apogee Components' communications had the same effect.

The NAR volunteers that showed up to run the range did a fantastic job. They traveled from all over the country at their own expense to help out, and they performed flawlessly. As I said, the weather was pretty miserable; cool and wet. By the end of the day, everyone was soaked to the bone. But they didn't give in. They persevered for the benefit of the students, and I didn't hear any complaining or bickering all day long. Besides that, it should also be noted that many other NAR members drove in to help out. But there were so many volunteers, that there wasn't enough work for them to do. So they stood around and just watched the rest of the folks and maybe just took notes that they could take back home on how to run an efficient launch range.

The students really knocked my socks off. Despite the miserable weather, they were gung-ho to the max. I saw several teams hold football-like huddles prior to launching their rockets, giving themselves little pep talks. Some even had team cheers or little songs they sang.

I could go on and on about the students... This event had turned them into true rocketeers - to a man, they knew the terminology like "Center-of-Pressure" and "Center-of-Gravity." They really put a lot of effort into learning about rocketry, and it showed. The intensity in their eyes was very focused on one thing; getting a good flight.

I don't think I seen any students just goofing off -- which says a lot about these young men/women and even more about the power of rocketry. I've been preaching "use rocketry" to teachers for a long time. It has a way of turning off all those bad attitudes and bringing out the positive ones. It was re-

Continued on Page 7

Team America

Continued from page 6

freshing to see it on such a large scale as this event; and I hope that the teachers that were there saw it too. They need to encourage other teachers to try rocketry in their classrooms; because it has such power to motivate students to learn. I don't know of any other activity that has this kind of impact.

Besides just learning about math/science, these students had to learn about leadership and teamwork to accomplish a difficult challenge. Because the rain made things difficult on the range, they really had to help each other out to get their rockets to the launch pads during their allotted time slot. While one student was hooking up the igniters, the others were holding umbrellas or sheets of plastic to try to keep things as dry as possible. I don't recall seeing many misfires on the range, which tells us a lot about there prep skills in such wet conditions.

The students also had to raise their own money to make the trip to Washington D.C. There was one team that I talked to that went so far as to make a trade with their school's PTA to get the money. They said that in return for the money, they were going into the elementary schools and teach fourth graders about rocketry. It should be noted that many of these students were graduating, and would be running training sessions after their liberation from high school - on their own time.

Competition Results

Here is a little synopsis of the flight results from the competition. They were sent to me by Trip Barber:

57 of 101 teams had qualified flights. The rest were DQ'ed for one reason or another, with the most common failure mode being the second stage not igniting.

8 teams received and used 2nd flight opportunities, of which 3 were qualified; the highest place among these was 6th.

Only 1 of 109 rockets flown was not recovered.

46 teams used composite engines and some form of complex staging, of which 20 were qualified.

55 teams used purely black powder engines, of which 37 were qualified.

The top 4 flights were purely black powder, 1 composite design tied for 4th.

92 of 101 entries were over 1 pound in liftoff mass and required a waiver/notification to fly. {Editor's note: The BATFE may not think that a explosives waiver is not needed, but it obviously is for this kind of event...}

What's next? Where do we go from here?

The obvious "what's next" is that this event should be repeated yearly. The impact on these students and their advisors will last a lifetime.

I don't think that these students were somehow "better" than the other kids in their schools. It was the inherent "power of rocketry" that brought out all these good qualities. They all started out knowing nothing about rocketry, and through it, it turned them into "above average" students. Based on this alone, we have to repeat this event.

There were a lot of teams that didn't qualify to come to Washington for the finals. I'm sure that they got nearly as much out of the experience as those 101 teams that did make the trip to Washington. Somehow, we need to keep their involvement in rocketry going forward too. Anyone with any ideas?

To us NAR members, I can see that this whole event has been a rejuvenating source of energy. The local NAR clubs have stepped up to the plate and have really come alive through the process. We need to encourage this again in the future.

The kids that returned home from this event are really energized right now. This fire needs to be fanned so they stick with rocketry long into the future. One thing that local clubs can do is to host home-coming parties for all the teams; not just the ones that went to Washington DC. Let the kids talk about their experiences and what they learned. They'll really surprise you with their level of maturity that they gained, and how much they really love rocketry.

If they are starting a local NAR chapter at their school, your club might want to be a sponsor of some of their launches. Maybe you can provide launch equipment to get them going, or help them conduct building sessions to get other students involved too. Whatever you can do to encourage them to continue with rocketry will be a benefit to them and to the NAR.

In conclusion, I feel in my heart this single event is changing the NAR as we know it. Get ready to watch the size of the NAR explode. You can be a part of it. Help get these kids stay involved. When you do, you'll be changing rocketry forever.

Reprint Information:

Tim Van Milligan is the owner of Apogee Components (http://www.apogeerockets.com) and the curator of the rocketry education web site: http://www.apogeerockets.com/education. He is also the author of the books: "Model Rocket Design and Construction," "69 Simple Science Fair Projects with Model Rockets: Aeronautics" and publisher of the FREE e-zine newsletter about model rockets. You can subscribe to the e-zine at the Apogee Components web site, or sending an email to: ezine@apogeerockets.com with "SUBSCRIBE" as the subject line of the message. This article may be reprinted as long as this paragraph is included with the text.