ISSUE 105, JUNE 13, 2003

APOGEE PEAK OF FLIGHT NEWSLETTER

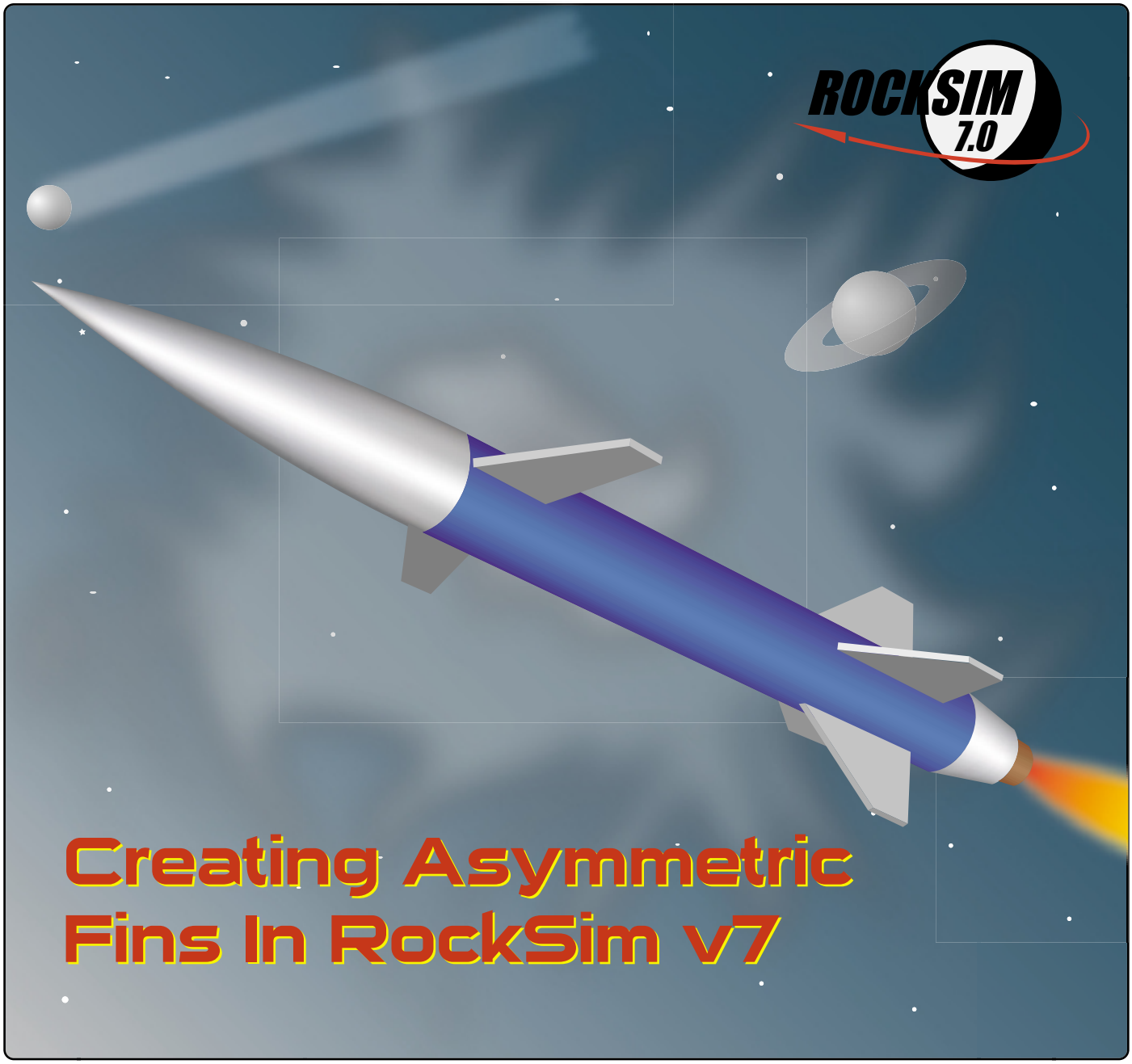

Creating Asymmetric Fins In RockSim v7

APOGEE COMPONENTS
1130 Elkton Drive, Suite A
Colorado Springs, CO 80907 USA
www.ApogeeRockets.com
orders @ApogeeRockets.com
phone 719-535-9335 fax 719-534-9050

Issue #105, June 13, 2003

APOGEE

PEAK OF FLIGHT

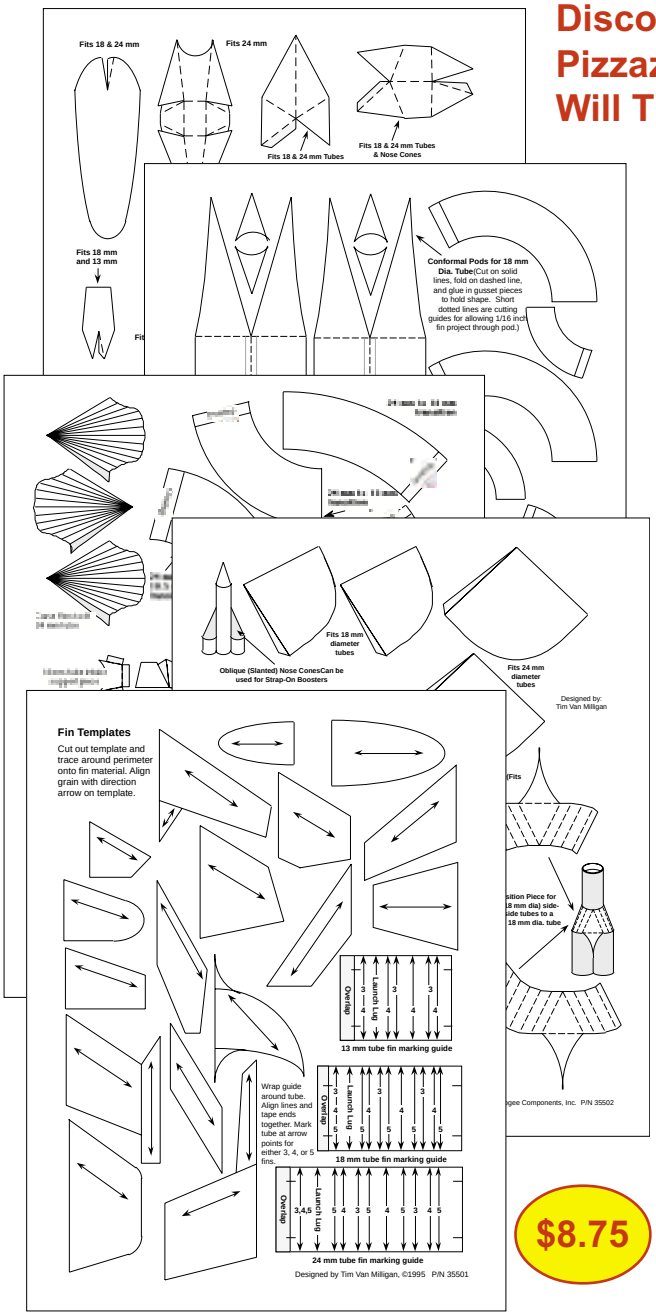

Discover An Easy Way to Add Style and Pizzaz To Your Rockets — Other Modelers Will Think You're A Design Genius.

With the Designer's Resource Pak, you can give your rockets that uniquely distinct appeal that will make others envy you with jealousy. And it is easier than you think.

The Designer's Resource Pak is a collection of cardstock patterns and template sheets that you simply add to your rocket to give it a personalized stylistic appearance. They are different from anything ever before created, and you're sure to stand out from the crowd. The 5 sheet set includes: Fin Templates, Paper Canopy Patterns, Cardboard Nozzles, Paper Nose Cones, Inlet Ducts and MUCH MORE! Use these in various combinations to make hundreds of different rocket designs! There are enough parts to create an armada of distinctive rockets.

On these pattern sheets are:

- 17 Fin templates
- 15 Cardboard jet cockpits (all different types!)
- 12 Cardboard nozzles
- 5 Tube transition sections
- 4 Oblique nose cones (never before available)
- 3 Fin placement guides
- 3 Angled tube cutting guides (great for inlets)
- 3 Cone fins (really neat and ultra different!)
- 3 Jet intake pattern developments
- 2 Conformal fairing pods
- 2 Circle-to-square transition sections
- 2 Circle-to-triangle transition sections
- 2 Transition pieces for 2-tube cluster to a single tube
- 1 Circular intake cutting guide (ultra unique and exciting!)
- Instructions for enlarging any piece to fit any rocket

Also included: 7 different display stand patterns so you can show off your great looking rockets! Plus you get a SPECIAL FREE BONUS: Kit-like plans - the "Interstellar Crusader;" a futuristic NASA high-speed research plane. The sleek styling of this high-flying model will be the envy of all your rocket flying friends.

$8.75

Designer's Resource Pak

Order Now From The Apogee Web Site!
http://www.ApogeeRockets.com/construction_supplies.asp

About this Newsletter

You can subscribe "FREE" to receive this e-zine at the Apogee Components web site (www.ApogeeRockets.com), or sending an email to: ezine@apogeerockets.com with "SUBSCRIBE" as the subject line of the message.

Issue #105, June 13, 2003

APOGEE

PEAK OF FLIGHT

Creating Asymmetrical Fin Arrangements

By Tim Van Milligan

A unique new feature in RockSim v7 is the ability to create asymmetric fin arrangements. That means you don't need to have identically shaped fins in the same fin set on your rocket. It also means that the fins on your rocket don't have to have identical shape. Nor do they need to be space equally around the perimeter of the tube.

For the purpose of this article, I'd like to make one more statement to define what I'm talking about in regards to this topic. That statement is that we also want to include symmetrical configurations that don't fall into the domain of the Barrowman equations.

For example, in the classic Barrowman equations, the number of fins was limited to exactly 3,4, or 6. If the rocket had 5, 7, or 8 identical fins (evenly spaced around the perimeter), this would be a violation of the Barrowman Equations. Also to be included in this category of symmetrical, but not Barrowman computable; is the configuration of just 2 fins -- like wings on an airplane. Another symmetrical configuration that violates the Barrowman equations are "inter-digitated" (staggered) fin sets. For example, this could be like staged rockets, where the bottom set of fins must line up with the top set. (see e-zine newsletter #97 at www.Apogeerockets.com/education/newsletter97.pdf

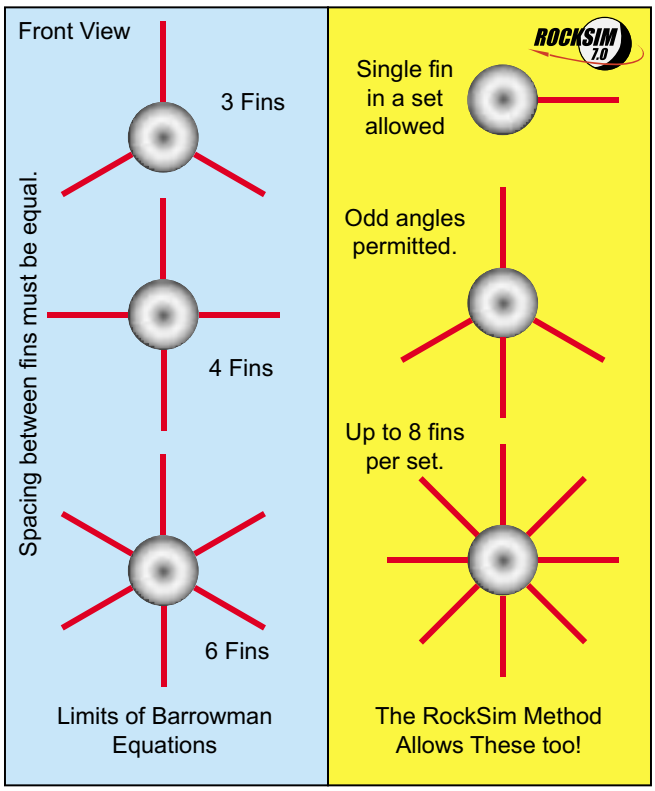

Figure 1: The Barrowman Equations were very limiting to the arrangement of fins on the rocket. RockSim v7 breaks out of this design barrier.

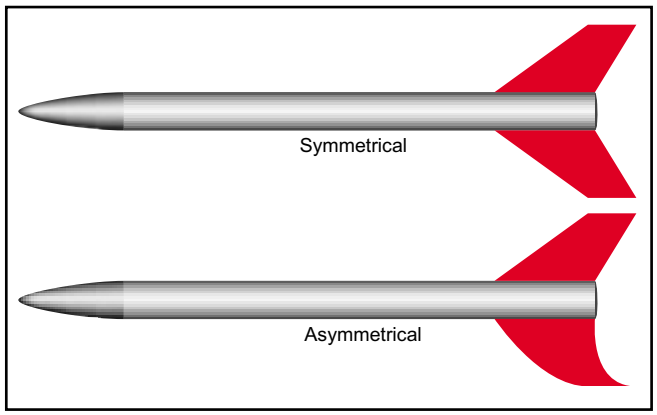

Figure 2: Assymetrical also means you can intermix different shapes on the same part of the rocket.

So my definition of Asymmetrical Fin arrangements includes both non-symmetrically spaced fins, plus symmetrical arrangements that are not computable using the classic Barrowman equations.

Figure 1 shows different asymmetric arrangements, just so you can see what I'm talking about.

Basically, now that we have a broad definition, the possibilities for the designer are seemingly endless. Figure 2 shows how you can now intermix fin shapes onto the same area of the rocket to create boundless possibilities.

Even though making asymmetric fin sets in Rocksim is fairly easy, I still want to give you a few pointers.

You'll notice you'll have a lot of control over the number of fins in a fin set. As you can see from Figure 3, you can make a fin set that has from 1 to 8 fins. A "set" is a group of fins that have identical shape. Another definition of a "set" is that if it has more than 1 fin, they will be spaced equally around the perimeter. The angular distance apart is easy to determine. Just divide 360° by the number of fins in the set. For example, if you have 4 fins in the set, they will be spaced 90° apart. Two fins will be 180° apart.

(continued on page 4)

Asymmetric Fins

Continued from page 3

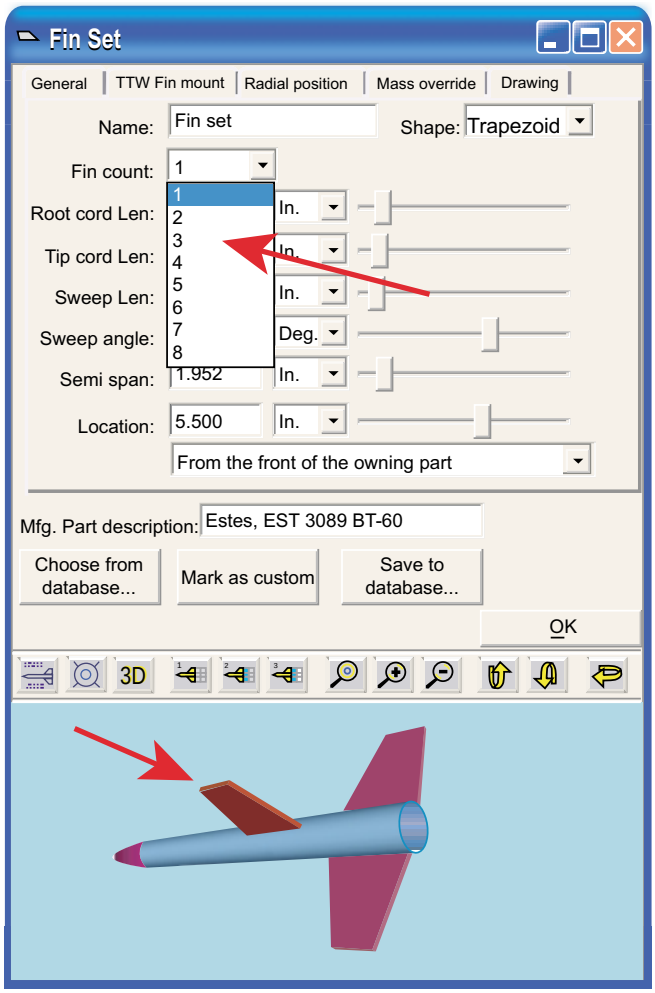

Figure 3: New in RockSim v7 is the ability to choose between 1 and 8 fins in a set.

If you want the fins to be positioned non-uniformly (at odd angles), or if you want to mix different shapes in a set, then you'll have to create multiple "one-fin sets." Each fin will need to be positioned on the rocket one at a time.

This isn't as hard as is sounds. In a lot of cases, your fins will be identical, with the exception of their position on the rocket. So use the "Copy and Paste" feature of RockSim to save time. After you create and copy the first fin, you only have to open the duplicate fin and adjust the position on the rocket.

What you'll notice that is new is the "Radial Position" indicator. It is like a slider bar that is used on length variables,

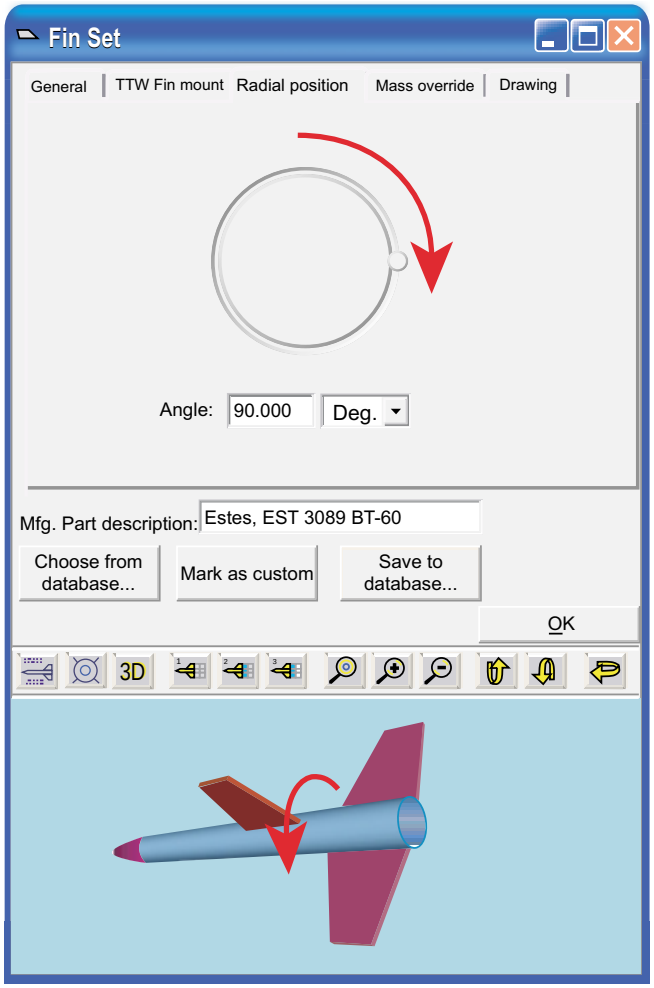

Figure 4: Each fin can be placed on the rocket, and oriented into the right position.

but this time it is circular. As you move the radial position, the fin slides around the circumference of the tube, instead of along the length. The zero angle position is the top of the rocket, the 180° position is the bottom; while the 90° and the 270° locations are the right (starboard) and left (port) sides respectively. It is really easy to figure out, and if you switch to the 3D view or 2D base view, you'll get the hang of it in just seconds.

One last helpful hint. Remember to go back and give each fin its own distinctive name. Otherwise, RockSim will give them all the same name like "trapezoid" fin, which isn't nearly as useful in helping you distinguishing parts in the tree as names like "left side dorsal fin." If for no other reason, do it for the people like me that look at your designs.

Stability of Asymmetrical Designs

(Continued on page 5)

Asymmetric Fins

Continued from page 4

Asymmetrical designs pose a new stability problem for designers. Let me explain.

The classic Barrowman equations look at the rocket from a side profile (see Figure 5). Go ahead and dig out your copy of the Handbook Of Model Rocketry to see what I'm talking about. You'll always see a side view of the rocket.

One of the assumptions of the Barrowman Equations is that all the fins must be equally space apart. What this does is simply things. The result is that now it doesn't matter which side of the rocket you look at: the side view is always the same.

However, with RockSim v7, you can have one side of the rocket overloaded with fins compared to another side. The view changed... The Barrowman Equations can't handle this. Fortunately the RockSim Stability method can.

Tip #1: When designing rockets with Asymmetric fins, you "must" use the RockSim stability method. In fact, if you try to use the Barrowman CP method, you'll get an alert in RockSim v7 saying it will switch to the RockSim method to compute the CP.

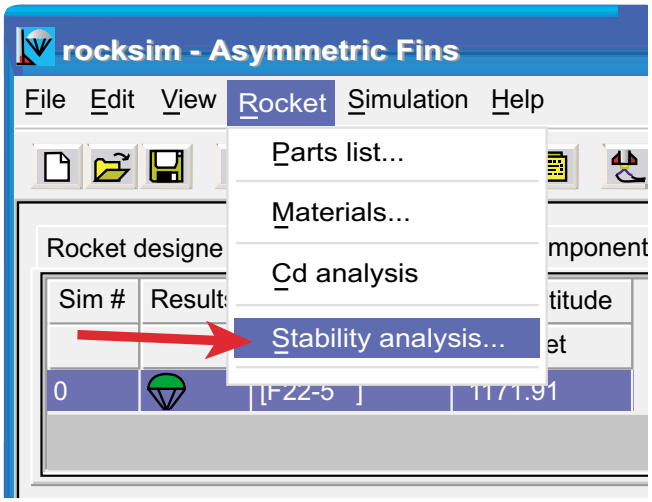

Figure 6: The new stability analysis screen is selected from the "Rocket" pull-down menu.

What the RockSim method does is compute the static CP of the model by looking at it from all sides. It computes it 360

(Continued on page 6)

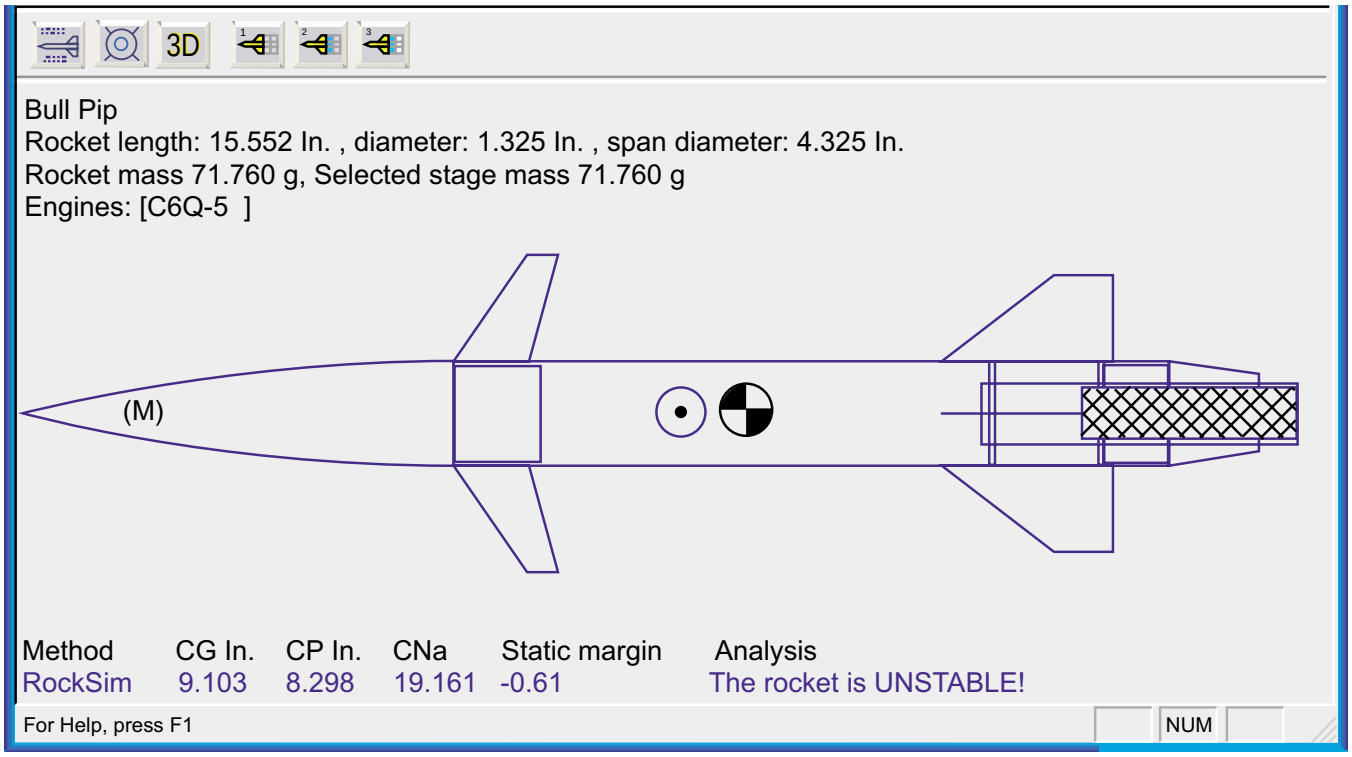

Figure 5: This rocket shows two forward fins, and 4 rear mounted fins. The stability summary analysis on the bottom of the screen shows that this rocket is unstable. For the purpose of the rest of this article, this "view" will now be called the 270 degree view.

Asymmetric Fins

Continued from page 5

times, once for each of the 360° around the perimeter of the rocket. Then it compares all 360 results, and finds the CP location that is the furthest forward -- which is the least stable configuration. It is this result that is displayed on the 2D design view. See Figure 5.

Why does it choose the least stable static CP location? Because we don't want you thinking the model is actually more stable than it really is. We want you to design stable rockets. This is particularly true for school kids that are just getting into rocketry, and don't know what CP stands for. But they do understand "stable" versus "unstable" in the summary screen.

The Stability Analysis Chart

But there is some useful information buried in the data

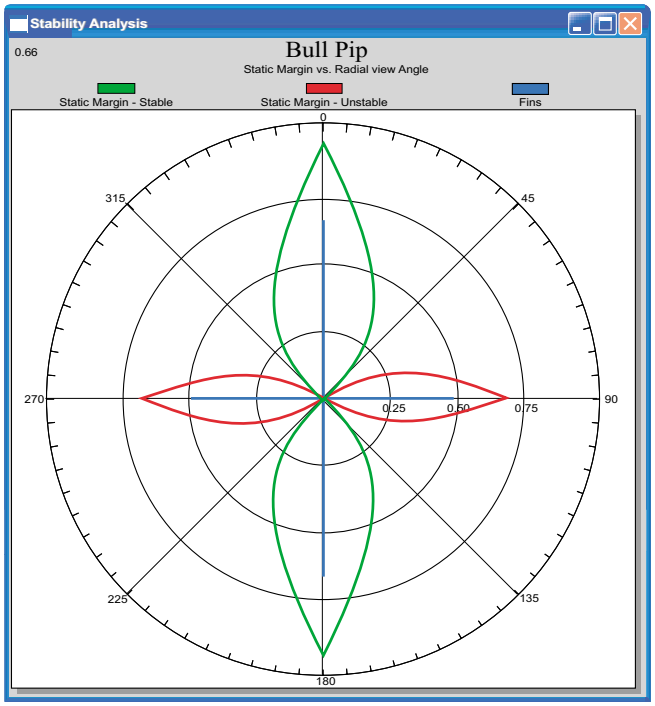

Figure 7: The stability analysis chart shows you the which view-angle will be stable, and which will be unstable.

about the static CP positions at each of the 360 side views. So you'll notice another new chart in RockSim v7. To get to this new chart, select "Stability Analysis" from the "Rocket" pull-down menu (Figure 6).

The new Stability Analysis chart is shown in Figure 7.

The first time you look at it, I don't know if it will make sense to you. So I'll try to explain what you are seeing.

First of all, you can display the stability information as CP/CG position or as static margin. The difference is that Static Margin is just a comparison of the CP versus CG position, as compared against the diameter of the rocket. For example, we say that a rocket has a Static Margin of 1.0 when it has its CG location in front of the CP location by a distance equal to the diameter of the tube.

It doesn't really matter which chart you use. It is just different ways to display the same information. Sort of similar to choosing millimeters instead of inches. It is the same thing, just a difference in user preference.

The chart consists of a series of concentric circles. The outer circle is labeled in degrees: 0° at the top, and 180° at the bottom. These angles are the direction you are viewing the rocket from. I'll talk about this more in a moment.

The inner circles represent lengths. If you are displaying Static Margin, like in Figure 7, the inner circles will be unitless. But if the particular circle is labeled "1.0" then it means that any line crossing it will have a Static Margin of 1.0 at that point. If you display CP/CG, then the inner circles will have units like inches or mm (whatever you choose). The zero point (the tip of the rocket) will be in the exact center of the circle. The further away from the center you get, would be like traveling down the length of the rocket.

The Red and Green Lines

The Static Stability will be indicated on the chart by either green or red lines (these are the default colors, but they are user changeable). The Green static stability line indicates a positive value -- meaning that the CG is located in front of the CP. A red static stability line indicates a negative value, which means the CP is located in front of the CP. This is bad... Which is why you don't want any "RED" lines on the chart. If you have a red line, the summary on the 2D (Figure 5) view will always say: "the rocket is unstable."

There are fin lines shown on the chart too. They are here to help you orient yourself to the chart. The view looking at the fins is exactly the same as the base view of the rocket. In other words, you are looking at the bottom of the rocket. The tube is not there, because it really isn't a base view of the rocket, the fins are positioned just to help you get oriented.

Now, I'll show you how to read the chart.

As I said previously, the angles on the outside of the chart represent the direction from which you are viewing the rocket. Keep this in the back of your mind, because it will help you sort out what you are seeing on the chart.

To review: The direction you look at is important, be-

(Continued on page 7)

Asymmetric Fins

Continued from page 5

cause that is how static stability is determined - Recall, static stability is determined by the side view of the rocket. It is almost as easy as that.

For example; let's say we are looking at the rocket from the perspective of the image shown in the 2D view on the main screen of RockSim as shown in Figure 5. This is a common side view that we are all used to seeing.

If you flipped the image over, so the rocket was pointing in toward the right, you are now looking at the 90° view.

If you looked down from the top, you are now looking at the 0° view.

Are you oriented yet? If not, here's another description.

Take a look at Figure 8 below. Imagine you are holding the rocket at eye level, and you are looking straight at the back end. If you rotate the rocket in your hand so the nose is pointing up, you are looking at the 0° view. If you rotate it back to the butt end, and then rotate it so the nose is pointing down, you are now looking at the 180° view.

You always start by looking at the bottom of the rocket, and then rotate it so you are looking at a side profile. The direction the nose points is the view angle. Easy, isn't it?

(Continued on page 8)

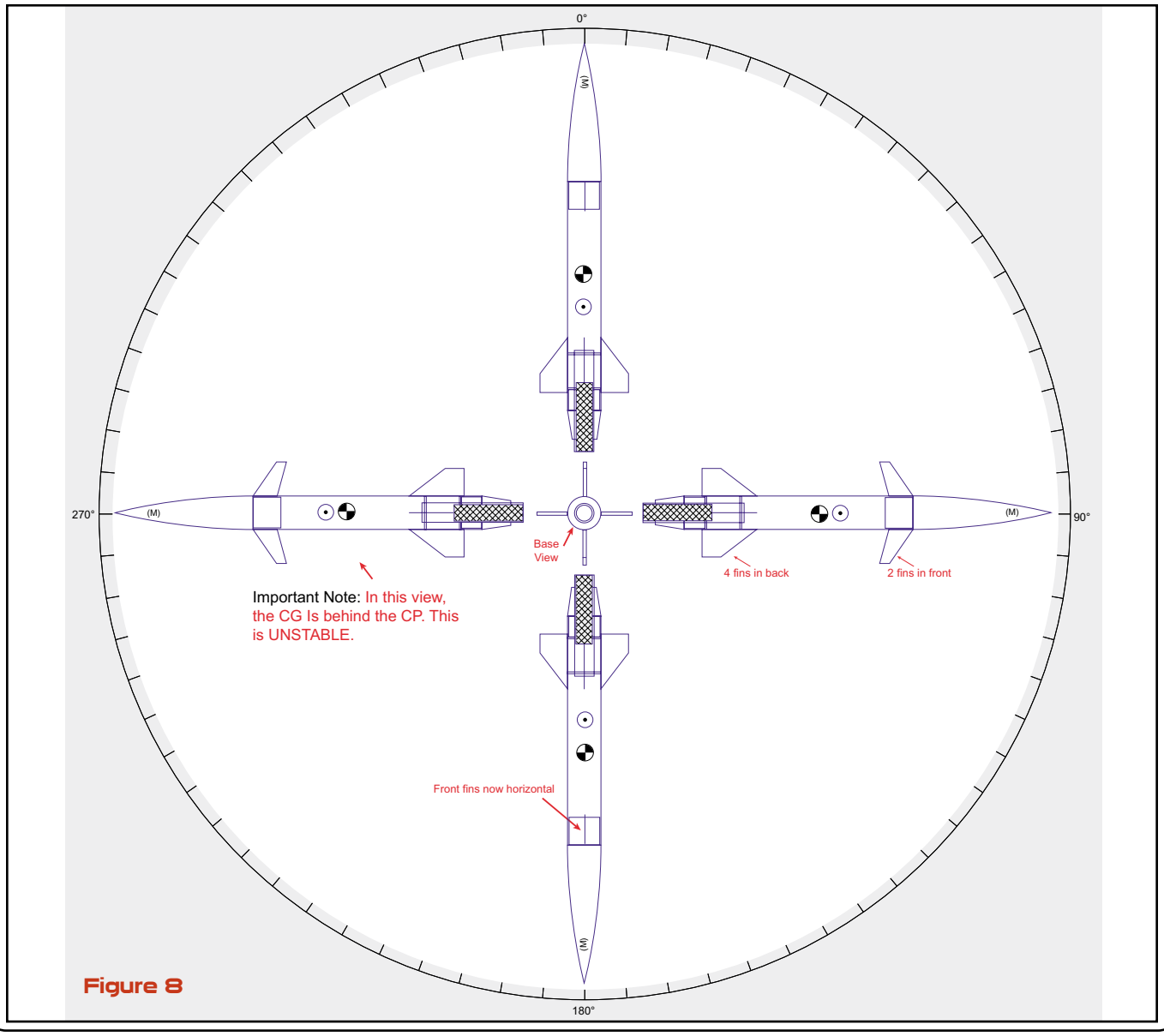

Figure 8

Asymmetric Fins

Continued from page 5

That is how the side image shown in Figure 5 is called the 270° view.

Now to the Stability Analysis chart...

Start by ignoring any red and green lines. They are not lines. They are a series of "points." They are just so close together, that they look like lines.

Take a ruler, and lay it on the chart from the view you are looking at. So if you are looking at the side view (rocket point toward the left), you would would lay your ruler on the chart with one end on the 270° point, and the other end at the center of the circle.

Where your ruler crosses the line (red or green), that is the point on the chart that tells us the static stability of the rocket; in that view direction.

If the point is "green," then the rocket has a positive static stability at that view angle. If it is a "red" point, then the rocket

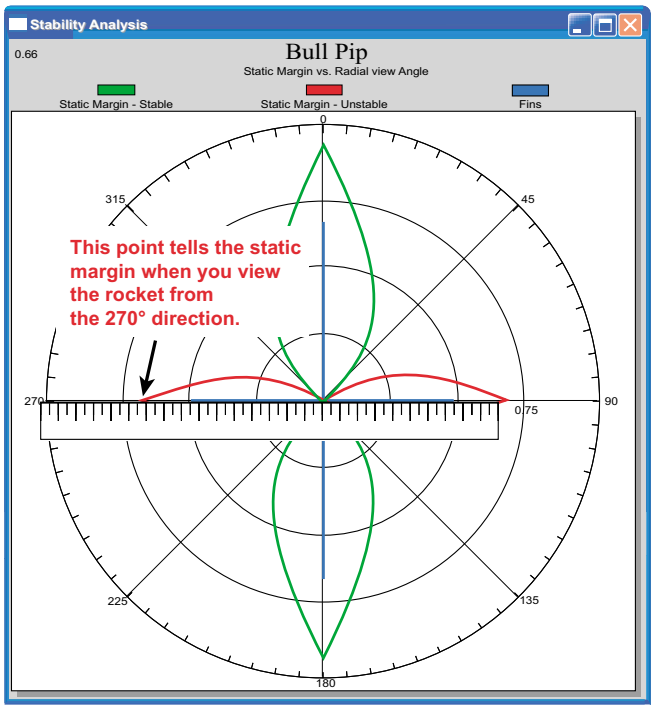

Figure 9: When you read the chart, you should ingore the lines, and only look at the point corresponding to the view angle.

is unstable at that view angle.

If you choose to view the CP/CG stability plot, the rocket is stable if the CP is behind the CG. So on the chart, the CG will be closer to the center of the circle, and the CP should be

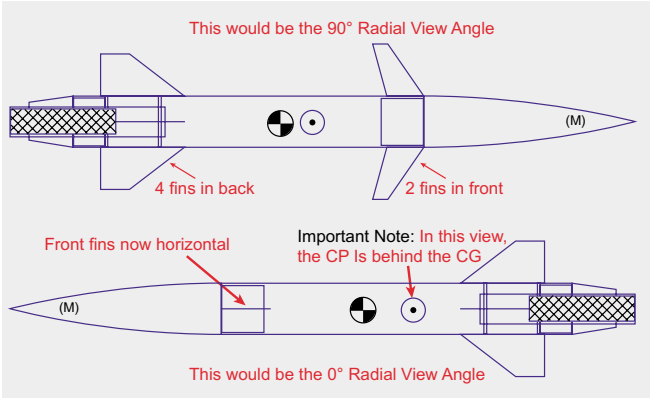

Figure 10: This is a review. The important thing to remember is that from every view, the CP will change location.

closer to the outside edge.

To review, the angles on the outer circle of the stability analysis chart shows which side of the rocket you are looking at.

When you lay your ruler along your view angle (to the center of the circle), the point on the chart it touches tells you the Static Stability of the rocket on that plane. There are two charts, one for "static margin, and one that displays CP and the CG.

Tip: if you are looking at the Static Margin plot, and the rocket is just barely stable/unstable, then the points will be so close to the center of the circle that it may be hard to distinguish their actual value. In that case, switch to the CP and CG radial chart. The points will be much further from the center, and you'll be able to see them better.

If it seems too complicated, just look at the summary on the bottom of the main view (2D mode). It will simply tell you if the rocket is stable or unstable.

One final tip: Always load a engine into the rocket when determining static stability. That will move the CG to its rearmost position, which is where it will be when you launch the model.

About the Author:

Tim Van Milligan is the owner of Apogee Components (http://www.apogeerockets.com) and the curator of the rocketry education web site: http://www.apogeerockets.com/education. He is also the author of the books: *Model Rocket Design and Construction, 69 Simple Science Fair Projects with Model Rockets: Aeronautics* and publisher of the FREE e-zine newsletter about model rockets. You can subscribe to the e-zine at the Apogee Components web site, or sending an email to: ezine@apogeerockets.com with "SUBSCRIBE" as the subject line of the message.