ISSUE 125, MAY 17, 2004

APOGEE PEAK OF FLIGHT NEWSLETTER

Feature Article:

How To Make Simulated Nozzles That Add Pizzaz To Your Designs

Extra Bonus For Kids!

Two Printable Coloring Pages

APOGEE COMPONENTS
1130 Elkton Drive, Suite A
Colorado Springs, CO 80907 USA
www.ApogeeRockets.com
orders @ApogeeRockets.com
phone 719-535-9335 fax 719-534-9050

ISSUE 125 - MAY 17, 2004

APOGEE

PEAK OF FLIGHT

How To Make Simulated Nozzles

By Tim Van Milligan

In the book *Model Rocket Design and Construction*, there is a section on creating paper transition sections. One use, which I don't see too often at local launches, is using them as "simulated nozzles." In other words, to be used as pure decoration to give the rocket design some pizzaz.

In this article, I'll review for you the basic steps on creating a transition, and the particular items that will help you create a simulated nozzle. I want to give you some "ideas" for your rocket designs, and some of the important factors you'll need to consider as you are in the design phase of your rocket.

The first step is to decide how big you want your nozzle to be. Once you decide this, you are ready to create the paper pattern. The equations to make a transition pattern sheet are found in the book *Model Rocket Design and Construction.* You can also use the RockSim software to print out a pattern sheet. That is probably easier for most designers, because you can gauge how the actual nozzle will look in the 3D image of the design. This way, you can tell if it looks "proportional" to the size of the rocket you are designing.

Figure 1: A simulated nozzle on the back end gives the rocket a distinctive look.

When you print it out, I recommend choosing the thickest cardstock that will pass through your printer. You want a stiff nozzle on the rocket, in case the rocket lands "nozzle end down" after the flight. In the design book, I recommend making a multi-paper laminated transition to also add stiffeness to the part. You can go ahead and plan for this now if you have a big rocket and are worried about it getting dinged on landing.

Another option to add strength is to use fiberglass over the top of the paper nozzle. This works too, but it can be a bit messy during the construction phase of your project. I'll leave it up to you to decide if this is worth the effort.

But getting back to our project...

After you have printed out your transition pattern sheet, cut it out using a hobby knife. I prefer a hobby knife, because the curved cuts tend to be smoother than with a scissors. When you are cutting along the straight edges, use a metal ruler to guide the hobby knife so the cuts are straight.

After cutting out the paper transition pattern, you'll need to pre-curl it. For large transitions, a good technique is to pull it down over the sharp edge of a table. It is similar to curling ribbons used on birthday presents.. See Figure 3.

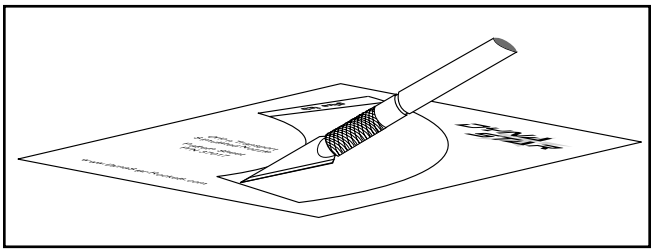

Figure 2: Cut out the transition pattern sheet using a very sharp hobby knife.

If the transition is small, you can roll it around a small wooden dowel. Whatever method you use, be careful not to

Continued on page 3

About this Newsletter

You can subscribe "FREE" to receive this e-zine at the Apogee Components web site (www.ApogeeRockets.com), or sending an email to: ezine@apogeerockets.com with "SUBSCRIBE" as the subject line of the message.

Simulated Nozzles

Continued from page 2

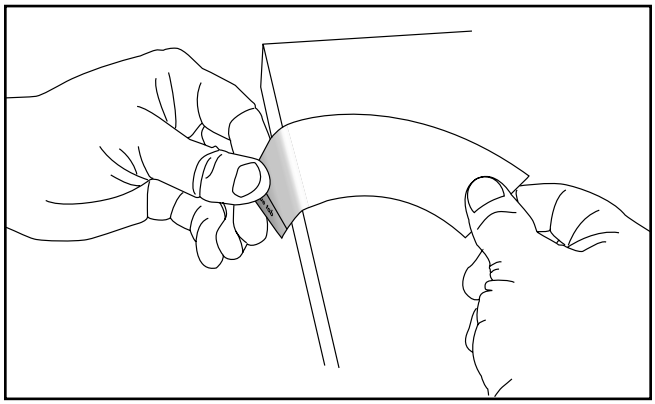

Figure 3: Pre-curl the paper by pulling it over the edge of a table..

crease the paper. We desire a smooth curve, and a crease will show up like a red spot on a white piece of paper.

Our next step is gluing the transition together. There are a few ways to do this. The best trick to getting a good looking part is to use "rubber cement" instead of wood glue or CyA adhesive.

Rubber cement stays pliable, so the curvature of the part remains nice and soft. In comparison, wood glue gets fairly hard, so the part often has a bump in it that looks unsightly.

Figure 4 shows the technique to use when assembling the transition. After you put rubber cement on both sides of the paper to be joined, flex the transition so that you are lining up the edges. You have to try lining up the edges without touching them together, because rubber cement will grab instantly, and there isn't any manuevering. Fortunately, if you don't get it right the first time, you can start over by rubbing off the rubber cement and applying a fresh coat to both sides.

Once you get the transition assembled, you can rub off the excess rubber cement. If you're making a double thick

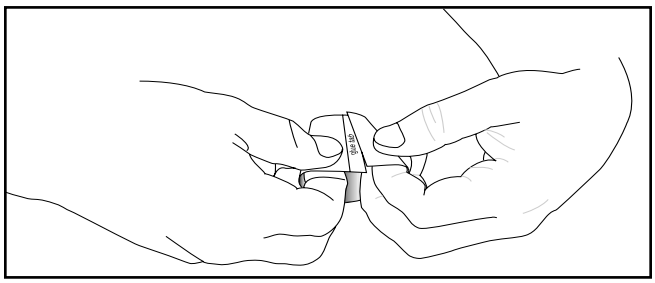

Figure 4: When using rubber cement, line up the edges to be joined, not the surfaces.

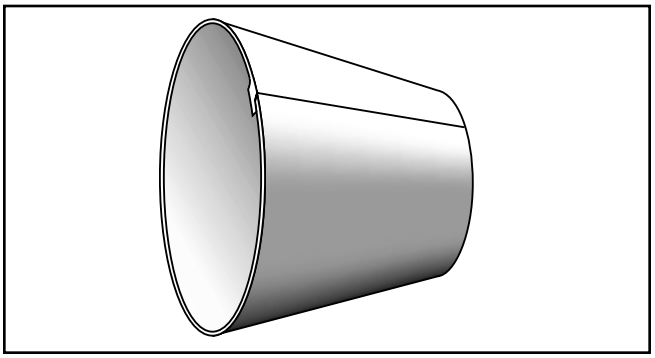

Figure 5: Smear glue on both the inside and the outside. This strengthens the part, and protects it from the heat of the rocket motor.

transition, you can go ahead and apply the second layer over the top at this point.

I also like to smear both sides of the paper with wood glue. This strengthens the paper, and also provides a bit of protection from the heat of the rocket motor. When the transition is used as a simulated nozzle, there is a bit of recirculated airflow at the base of the rocket. In essence, it is sucking heat from the exhaust back up against the nozzle's skin. The result is that the paint on the nozzle can blister. The size of the problem is proportional to how far inside the simulated nozzle the motor is placed. If it is deep inside, you're going to get a lot of blistering. If the motor sticks out a bit, the problem isn't as bad. So if you're designing a rocket with a simulated nozzle, this is something you'll need to consider before you start as-

Continued on page 4.

Simulated Nozzles

Continued from page 3

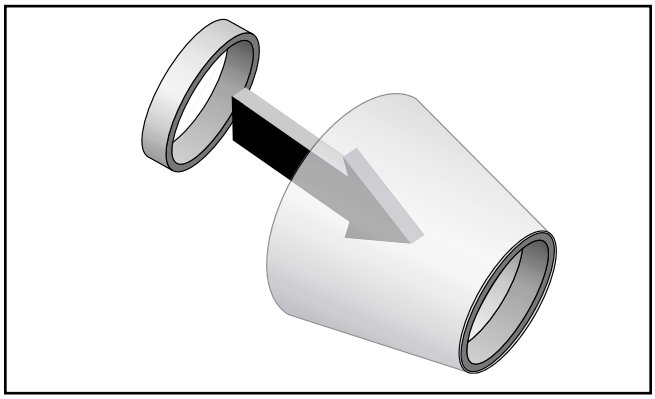

Figure 6: Glue a centering ring inside the front of the nozzle.

sembling the rocket.

Another thing that works great on simulated nozzles is to put a centering ring at the front end of the part (see Figure 6).

This ring makes the nozzle much easier to install on the rocket, because it centers up the nozzle on the back end of the rocket and also keeps it straight.

If your rocket has a metal engine hook, the ring will also help hold it in place. But if you want to be able to bend the hook back far enough to insert the motor, you might want to cut a small notch in the inside of the ring first. This is pretty straight forward to do, so I haven't illustrated it.

In Figure 7, you'll see that installing the simulated nozzle is as simple as sliding the nozzle over the top of the portion of the engine mount that sticks out the back of the rocket. Just put a little bit of wood glue on the engine mount tube prior to installing the nozzle.

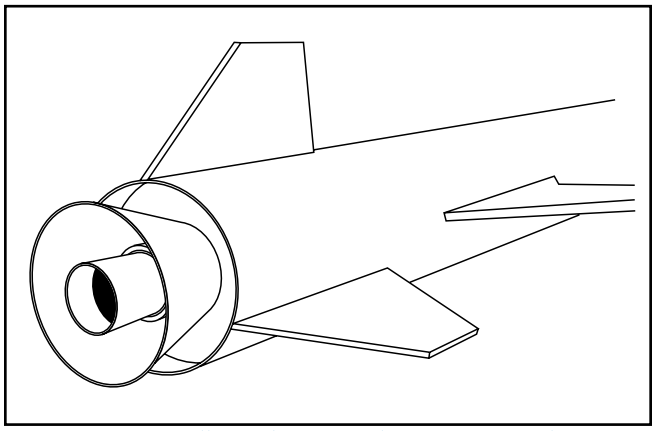

Figure 7: Installing the nozzle is as simple as sliding it up over the engine mount tube.

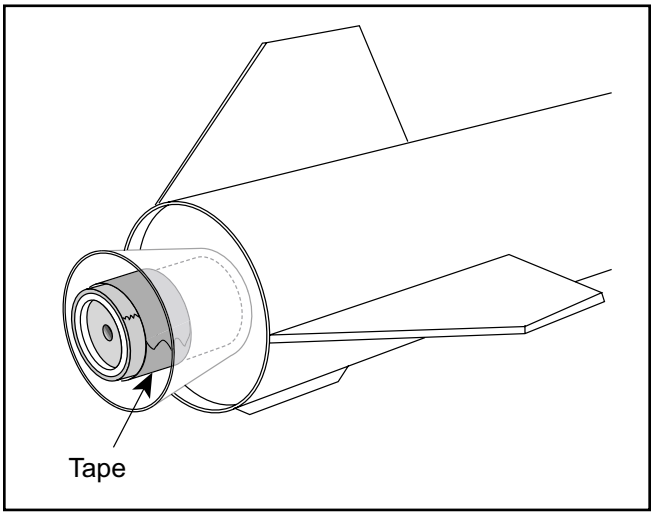

Figure 8: Tape can be used to hold the rocket motor in place.

Also in Figure 7, note that the engine mount tube sticks out of the base of the rocket pretty far. As mentioned previously, this is done to minimize the amount of heat the nozzle experiences.

If you don't have a metal engine hook in the rocket (I rarely use them myself), you can simply tape the motor into the engine mount tube as shown in figure 8. On small rockets, this can be tricky, because you have to get your fingers inside the simulated nozzle to press down the tape. This is another thing to consider when you are designing the size of the nozzle. Sticking the engine mount tube out of the nozzle a little bit can make it easier to install the tape.

Conclusion

Simulated nozzles are easy to make. But besides that, they can make an ordinary looking rocket into one that is unique and distinctive. Give it a try on your next rocket design, and watch the eyes of other modelers light up at the sight of your model.

About the Author:

Tim Van Milligan is the owner of Apogee Components (http://www.apogeerockets.com) and the curator of the rocketry education web site: http://www.apogeerockets.com/education. He is also the author of the books: *"Model Rocket Design and Construction," "69 Simple Science Fair Projects with Model Rockets: Aeronautics"* and publisher of the FREE e-zine newsletter about model rockets. You can subscribe to the e-zine at the Apogee Components web site, or sending an email to: ezine@apogeerockets.com with "SUBSCRIBE" as the subject line of the message.

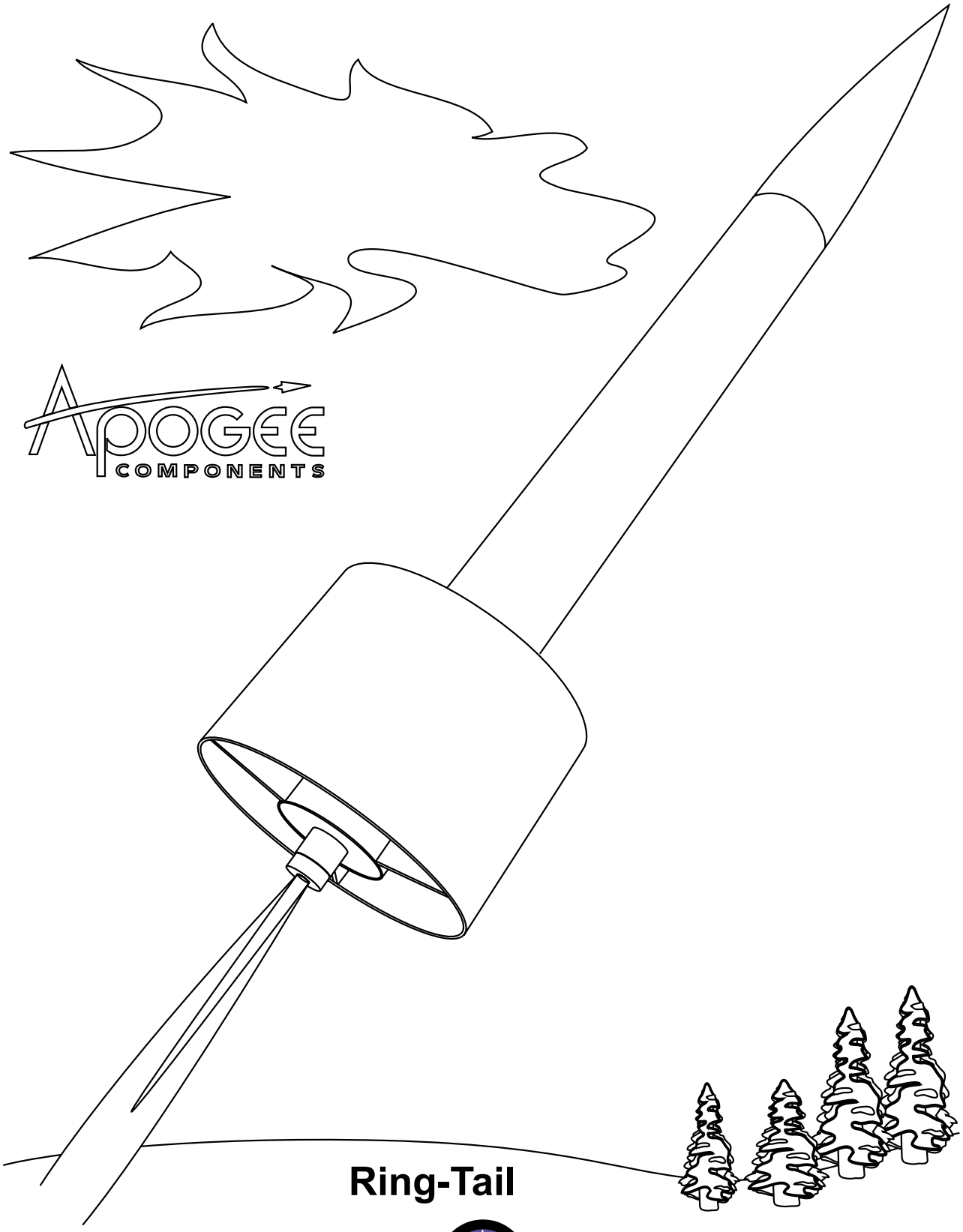

Ring-Tail

ISSUE 125 - MAY 17, 2004

APOGEE

PEAK OF FLIGHT

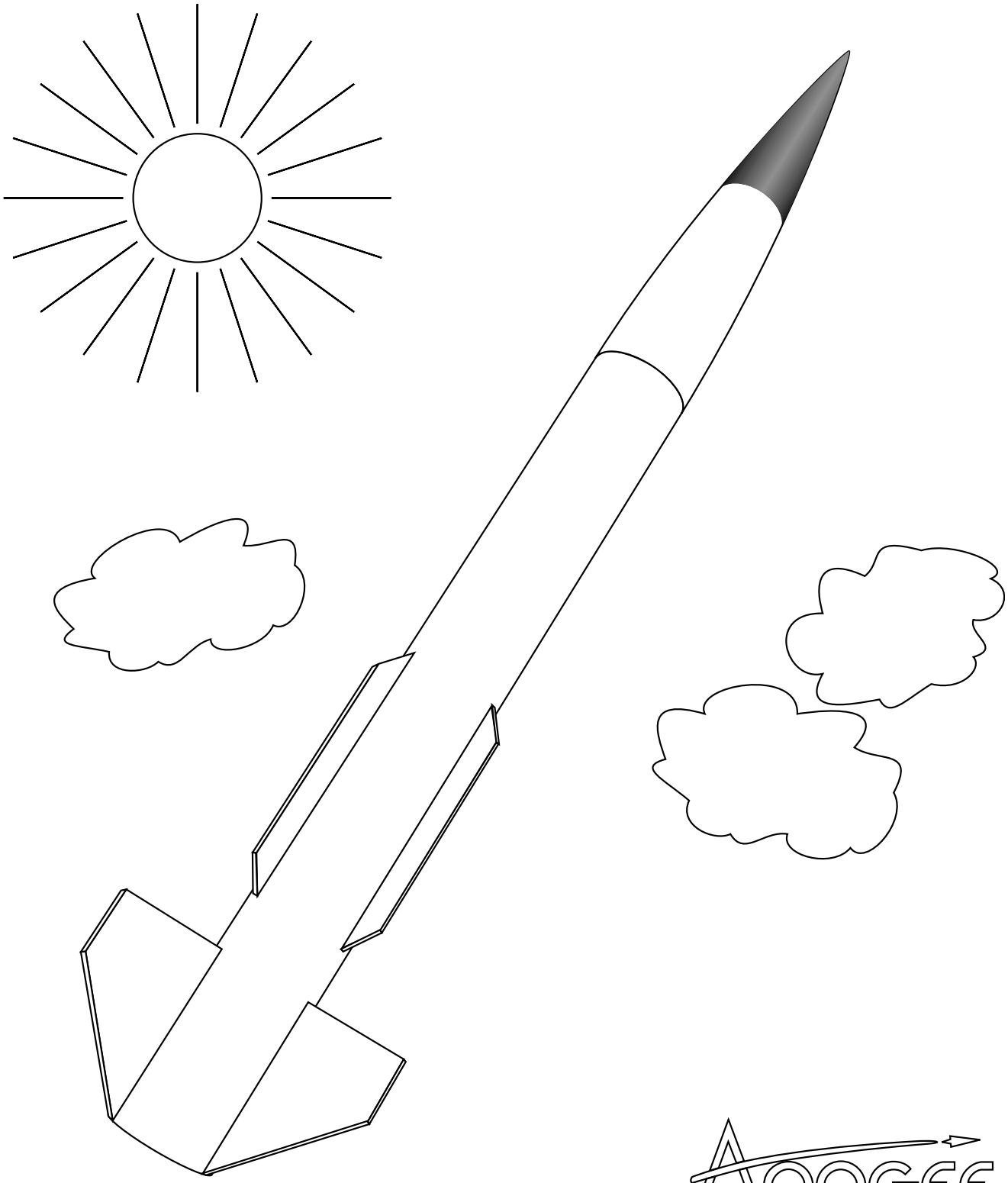

Strake Fins