ISSUE 143 - JUNE 10, 2005

APOGEE PEAK OF FLIGHT NEWSLETTER

Goodbye Dear Friend

In Memory of Lacey

INSIDE: Mood Lighting with RockSim

APOGEE COMPONENTS
1130 Elkton Drive, Suite A
Colorado Springs, Colorado 80907 USA
www.ApogeeRockets.com e-mail: orders@ApogeeRockets.com
phone: 719-535-9335 fax: 719-534-9050

RockSim: Mood Lighting
Part One

by Tim Van Milligan

LIGHTS, CAMERA, AND ACTION!

Here is a question that I've been asked about RockSim:

"Why is it that my rocket design doesn't pivot at the center but rather at the nose cone when I switch to 3D? It rotates lopsided." - Randy Ejma

That's a great question. First off, this question applies to all versions of RockSim, not just the newest version 8.0. The same thing happens in previous editions too.

The answer to the question is a bit complicated, because when you rotate the rocket in 3D mode, the rocket doesn't move at all.

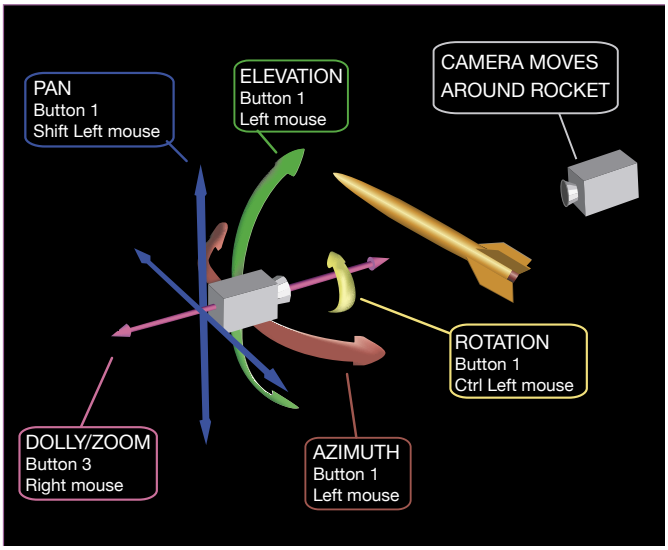

Figure 1: Definitions of the various camera movements. The rocket itself NEVER moves.

HUH?

That's right, the rocket ALWAYS remains stationary.

I bet you're asking, "then how come it looks like the rocket is moving around?"

The picture of the rocket in 3D is what you'd see if you were looking through the lens of a camera. So imagine this... You are holding a camera, and you're looking at the rocket through the eyepiece. The rocket is fixed, but you and your camera are free to move around and look at the rocket from any direction.

Does that make a bit more sense?

Here is an example that might explain it a little better. When you click on the "rotate right" button, what you're actually doing is taking your hand-held camera, and walking in a circle around the rocket toward your LEFT. Through the eyepiece of your camera, the rocket appears to be spinning to the right.

Because you're holding the camera, everything seems to be backwards. But this is the way that all 3D software handles objects. It always looks at an object through the lens of a camera.

In RockSim, the rocket is positioned in a X,Y, Z coordinate system, where the tip of the nose is at the (0,0,0) point, and the body of the rocket lies along the positive Y axis. See Figure 2 below.

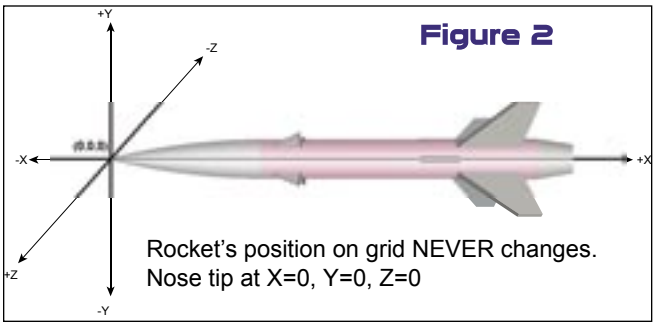

Figure 2

The rocket NEVER actually moves off of this coordinate system. It is as if it is glued into place.

Back to the original question...

If you go back to the original question, why does the rocket appear to pivot about a point off the nose of the rocket?

The answer is that what has happened is you've moved the focal point of the camera, and then rotated. Let me explain a bit more.

Continued on p. 3

About this Newsletter

You can subscribe "FREE" to receive this e-zine at the Apogee Components web site (www.ApogeeRockets.com), or by sending an e-mail to: ezine@apogeerockets.com with "SUBSCRIBE" as the subject line of the message.

The focal point is where the camera is pointed. By default, the camera is pointed at the geometrical center of the rocket, as shown in Figure 3.

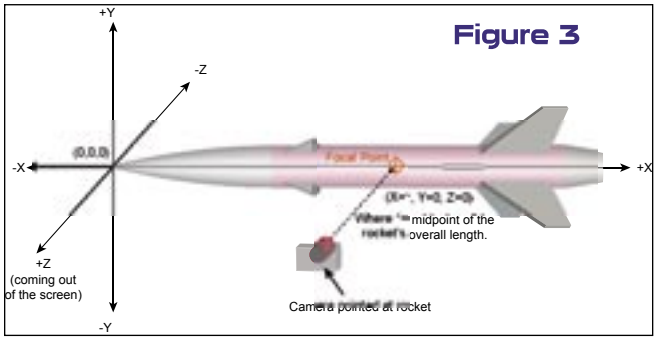

If you rotate the camera, it is still pointed toward this original focal point on the model. So it appears that the rocket is spinning at about the middle of the rocket; however, it is possible to move the location of the focal point of the camera on the rocket.

Whenever you *pan* the camera, either left, right, up or down, you are changing the place on the rocket where the camera is pointing toward. For example if you pan the camera to the right (which makes the rocket appear to be moving to the left) so that the fins are now in the center of your screen, you'll have created a scene that looks like Figure 4 below.

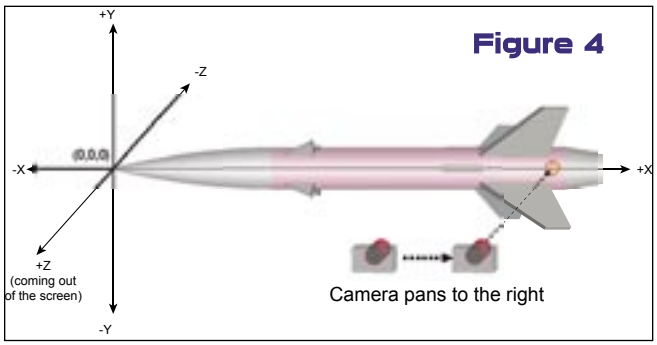

At this point, if you click on any of the rotate buttons, you will be essentially walking around the rocket while the camera is still pointed at the rear of the rocket. This is what was happening in Randy's original question except his camera was pointed at the tip of the rocket as opposed to the tail area.

It does look funny when you do it. I have to admit that. It takes time getting use to thinking about the camera moving around as opposed to the rocket spinning. I suppose if there was some other fixed reference point in the picture, such as a tree behind the rocket, that it would seem more like the camera moving. But, it wouldn't make much sense to have a tree behind the rocket.

So your next question is probably: "How do I restore the camera position so that it points at the geometrical center of the rocket again?"

This is where RockSim v8 differs from previous versions. If you have an older version of RockSim, you either have to use the controller buttons to manually reorient the image of the rocket or you have to completely quit Rocksim and then restart. The latter method would reset the camera to the default view as shown in Figure 3.

In version 8, there are two new buttons on the camera controller—they are "**Recenter Camera**" and "**Reset Camera**," as shown in Figure 5 below.

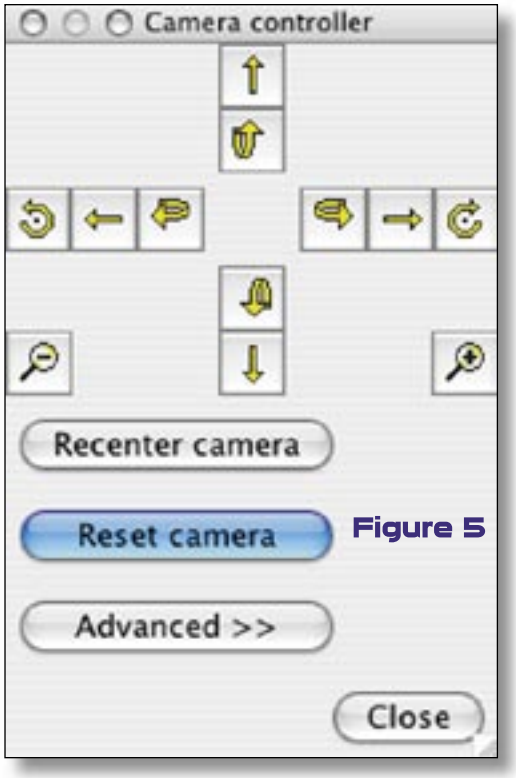

Figure 5

The "Reset Camera" button, when clicked, will reposition the camera to the default position, and reorient the lens so that it is pointed to the geometrical center of the rocket.

The "Recenter Camera" is a little different—it doesn't move the camera position, it only rotates the camera so that it points to the geometrical center of the rocket. Don't be afraid

Continued on p. 4

to click either button. They are meant to be a life-saver to get you back to where the image will move in a predictable manner.

There is a button on the Camera Controller labled "**Advanced**." Clicking it will allow you to have precise control over the location of the camera and where it points on the rocket. It contains two tabs: Relative, and Absolute. The "**Relative**" tab will move the camera based on where it is currently positioned. The one that I use more often is the "**Absolute**" tab,

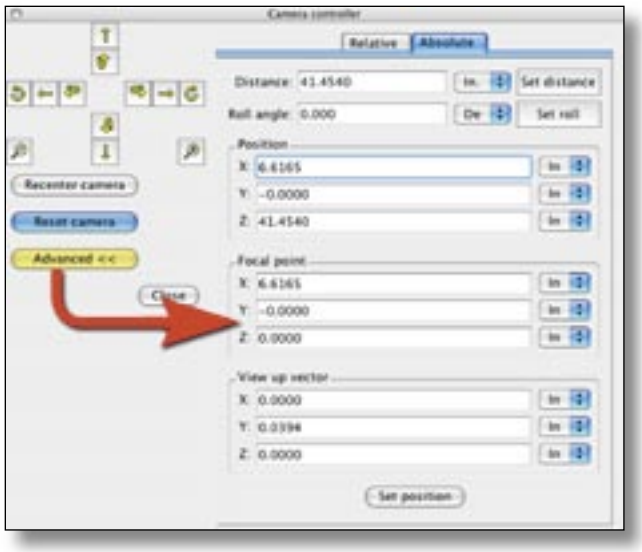

Figure 6: You can control the exact position of the camera by using the "Advanced" camera control options.

which is shown in Figure 6 below.

I'll try to describe some of the fields so that you can get a handle on how to use them. First of all, at the top of the options, you have the "**Distance**" of the camera away from the rocket. Changing this number is equivalent to zooming in and out. That is how RockSim controls how big the image is; it is just the distance between the camera and the rocket. The closer to the rocket, the larger the image in the window.

"**Roll Angle**," as the name suggests, will spin the camera and make it appear as if the rocket is spinning.

In the "**Position**" fields you have information on the location of the camera in 3D space. It is X,Y, Z coordinates and 0,0,0, is the tip of the rocket. The camera is in the same coordinate system as the rocket so, if you move to the right, you are travelling in the +X direction.

The "**Focal Point**" fields control where the camera is looking at. Again, we're using the same X,Y,Z coordinate system so, if we use the coordinates (0,0,0), we're pointing at the tip of the nose cone.

You have to be careful in selecting the right coordinates for where the camera is pointing or you could easily get a blank screen. If that happens, click on the Reset Camera button and you'll automatically recenter the image on the screen.

The "**View Up Vector**" section of the screen controls the orientation of the camera but you can ignore it if you only use the Position and the Focal Point fields.

I think it's a lot of fun to play around with the different camera positions. Give it a try and see for yourself. Don't worry about messing things up; if it gets out of hand, just click the Reset Camera button. Doing this will always get you back to original position.

Conclusion

In this article, I described the coordinate system that is used to control the position of the camera. This is what gives us the image of the rocket on the screen. This coordinate system is important as we'll find out in the next issue. It is also used to control mood lighting and shadows on the rocket. By using it, you can get some really neat effects and this is where the real fun begins!

About The Author:

Tim Van Milligan (a.k.a. "Mr. Rocket") is a real rocket scientist who looks forward to helping out other rocketeers. Before he started writing articles and books about rocketry, he worked on the Delta II rocket that launched satellites into orbit around the earth. He has a B.S. in Aeronautical Engineering from Embry-Riddle Aeronautical University in Daytona Beach, Florida, and has worked toward a M.S. in Space Technology from the Florida Institute of Technology in Melbourne, Florida.

Currently, he is the owner of Apogee Components (http://www.apogeerockets.com) and the curator of the rocketry education web site: http://www.apogeerockets.com/education/. He is also the author of the books: "Model Rocket Design and Construction," "69 Simple Science Fair Projects with Model Rockets: Aeronautics" and publisher of the FREE e-zine newsletter about model rockets. You can subscribe to the e-zine at the Apogee Components web site, or sending an e-mail to: ezine@apogeerockets.com with "SUBSCRIBE" as the subject line of the message.

WEB SITES WORTH VISITING

This issue's chosen web site is www.deltavrocketry.com. Brittain Fraley has come up with a very nice looking site design with some neat features to it. On the projects pull-down menu, you will find the DVR-1B MK Shea (Gyro Stabilizer). As he states on this page, "A piezoelectric gyro and servo moving a small set of fins provided roll stabilization for the camera platform" are the devices he came up with to make his videos more stable. There is a very slick comparison video that shows side by side the difference between the rocket with and without the stabilizers. There is a fin alignment page where the author shows some great techniques for aligning the fins on his rockets. A device called a 'center-locator' is one of the unique devices that he uses. Most of his projects are shown in excellent design and construction detail such as the shot from his

If you click on any of the links in the 'Projects' drop-down menu you will find that he includes RockSim (www.apogeerockets.com/rocksim.asp) files, links, and pictures with each project which is a nice addition. That is one thing about rocketry web sites that I feel is not only helpful but catches your attention as well. Take a look around in Brittain's site to find some great concepts and projects. And, by the way, my choice to review this web site and his having Apogee Components listed on the 'Resources' page is a complete coincidence!

Got a Good DynaStar Story?

Do you have a story of personal experience with one of our DynaStar line of rocket kits? If so, we would love to hear from you! Please e-mail any stories you have to johnm@apogeerockets.com. Sharing your experiences is a great way to get others excited about this wonderful hobby.

For information about DynaStar kits visit: www.dynastar-rockets.com It contains kit descriptions, DynaStar dealers and kit prices.

If you have a letter, comment, or suggestion for our newsletter, please send it to johnm@apogeerockets.com

Idea for Club Recruiting: Air Show Success

by Tim Van Milligan

Our very own rocket man, Tim Van Milligan.

In the booklet "Attracting and Retaining New Club Members," (http://www.apogeerockets.com/club_membership_bk.asp) I list 22 ways to promote a club. One strategy is to set up a booth or perform a demo at an airshow. If you run a club, it should be your number one recruiting tool.

This idea recently proved to be more effective than I even realized. Our club here in Colorado Springs (COSROCS, NAR section #515) had a booth at a local air show on Saturday, June 4. Credit has to be given to Warren Layfield, education outreach coordinator for our club, as he arranged the whole event. Warren called me and asked if I'd help out and bring things to display at the show. "Sure," I said.

We set up our booth on Friday before the show. Since this particular air show was held on a military base, security was tight and we had to go through background checks to be permitted entry to the base. We allowed plenty of time to get through the security checkpoints.

Our Saturday morning set-up was uneventful and gave us access to the static displays before the rest of the general public arrived. This is one advantage to working an air show. While all the aircraft were locked up, we could take pictures without all sorts of bystanders getting in the photos.

Our booth happened to be in an aircraft hangar that turned out to be a prime spot because, on Saturday, the air temperature plummeted and it became very windy. Being inside an enclosed structure kept us warm and prevented us from getting wind-burn. From our club's perspective, the poor weather helped us as it drove a lot of spectators into the hangar to get out of the wind. We were busy all day long.

Here are some tips in case you get the opportunity to set up a club booth at an air show:

1. Don't set up your rockets until the morning of the show. We set up the afternoon before but a rain shower came through right after we got set up. They didn't get the hangar doors closed until after it had stopped raining so things got a little damp. Bring big garbage bags in case it rains so that you can protect rockets and paper goodies from the elements.

2. Also, plan ahead for wind. Make sure you have heavy-duty display stands that won't tip over and check that tables are sturdy and won't flip over.

If you have paper products placed on top of the table, (such as: flyers, business cards, books, etc) make sure they are weighted down so they don't blow away. I'm sure you can find something better than the rocks that we ended up using.

3. Bring good signs to let spectators know who you are.

4. Bring plenty of club pamphlets. We ran out midway through the show. I'd recommend bringing at least 400 copies. I'd also suggest that you have at least one other give-away to attract people to your booth. A small poster, like the one in the newsletter #77, would probably work out great. See http://www.apogeerockets.com/education/newsletter_archive.asp.

5. If you have display items that aren't freebies, such as books, put a "leash" on them. Small kids can't read signs and don't know that they shouldn't walk off with items. They won't get very far if you attach items to the table with a rope.

6. Displaying big rockets is a good way to attract wanted attention and they are less likely to be picked up and manhandled by spectators.

7. Plan a schedule for everyone in the booth; that way you all get some time to walk around and see other booths and static displays.

8. Have fun and be sure to smile when people drop by.

In conclusion, having a booth at an air show is the best way to get a lot of new club members. Here's why:

1) Air shows attract a large crowd. The show here in Colorado Springs had 100,000 spectators. This large crowd is a perfect target market group and are likely to be interested in aviation and space. They're just waiting to be reeled in by your club's sales pitch.

Continued on p. 7

2) It gives you other places to hang out with your friends besides the rocketry range. Doing things together outside of rocketry helps form stronger bonds between members and, in turn, helps retain your members for a longer period of time.

3) When you work an air show, you get great behind-the-scenes opportunities. Some of our members had a chance to poke their heads into the cockpits of some neat airplanes. These were off limits to the general spectators but we had a chance to get close-up during the morning hours of the air show before the crowds arrived.

4) It gives your club the opportunity to raise funds; you might sell items such as soda pop or chips. Be sure to check with air show organizers before you sell anything.

Having a booth at an air show is a great marketing opportunity for your club. Since the summer season is upon us, now is a great time to see if there is an air show coming to your neighborhood. A good place to start is by searching on the internet at: http://www.airshownetwork.com/home.html.

A crowd of about 100,000 spectators attended the Air Show.

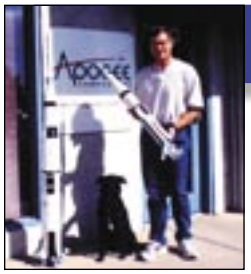

Goodbye Dear Friend

by Tim Van Milligan

On Wednesday, June 8, 2005 our mascot dog, Lacey, died. I thought I'd mention it in this newsletter because many of our customers knew her. Not only did she greet visitors here at our office, she also attended a lot of launches. She shook paws with anyone willing.

She entertained a lot of kids who would drag her around the launch range by her leash. She didn't seem to mind doing this at all. At the end of the day, I'd have to hunt down the kids just to get my dog back. They all wanted to take her home with them. Many kids that were afraid of dogs were cured of that fear as soon as they met Lacey. She seemed to sense their fear and was as gentle as a newborn lamb.

Lacey absolutely loved rockets. When she saw me loading up a car full of rockets, she'd immediately jump into the front seat. It was her way of saying "I'm going with and you're not going to forget to take me." She wasn't going to be left out of the fun.

If you saw the video book: "Building Skill Level 1 Model Rockets," (http://www.ApogeeRockets.com/skill_level_1_video.asp) there is an outtake movie of her antics on the launch range. I get more comments on that one than anything else in the video book. It's still hilarious to watch. When she heard someone saying "T–minus 5, 4, 3, 2, 1," her ears would perk up and her gaze would look skyward to see if she could spot the rocket in the air. If she did see it, she was off like a bolt of lightning to chase it down. As soon as it landed, the chase was over, and she'd come trotting back like she just won a race. I could never train her to bring them back, however.

We were never sure how old Lacey was. We adopted her in the fall of 1997 from a military family that had been transferred overseas. We never got to meet her former owners so we don't know when she was born. Our best guess is that she was maybe three at the time. About a year and a half ago, she was diagnosed with arthritis in her hind legs and spine. Maybe it was from chasing after too many rockets? Over time, she had a very difficult time walking. Unfortunately, the medication the vet put her on destroyed her liver even though it made her feel like a puppy again. In February, we discovered the medication's bad side effects, but was too late. They gave her only one month to live. Lacey liked being around rockets and kids and she lived a lot longer than even the vet expected. She came into the office with me until the very end.

Lacey is buried out on the rocket range where I fly rockets. The next time I go there, I'll be able to look over at her grave and imagine her chasing rockets with me again. I'm sure she'd like that.

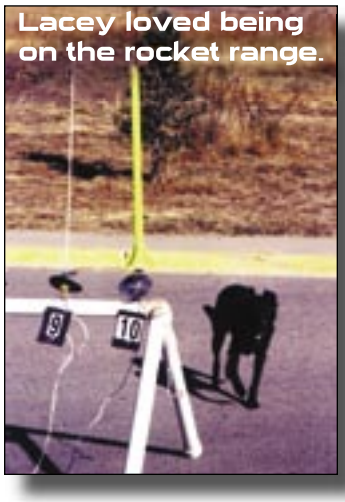
Lacey loved being on the rocket range.

TIP OF THE FIN

This "Tip of the Fin" is about alternatives to standard wadding.

Typical crepe paper is fire retardant, as required by law (this is only true in the U.S.). This has something to do with concerns about preschoolers, hanging paper strips, and flaming candles all mixed in equal proportions. You can get 2 rolls for $1.00 at the Dollar Store. If you get green, it blends in better with the surrounding fields, and you won't delude yourself that you will be able to find and pick up all the pieces. It works well on small diameter rockets.

If you don't have time to go to the store and buy crepe paper, you can purchase recovery wadding by going to: www.apogeerockets.com/wadding.asp

DEFINING MOMENTS

A **"stuffer tube"** is a smaller tube inside a larger body tube that leads the ejection charge gasses to the recovery device section of a longer rocket. This is to lessen the volume in order to ensure that the pressure to expel the recovery device is sufficient.

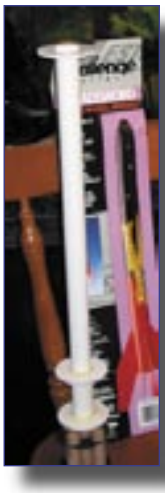

If you need to tubes to construct your "stuffer tubes" go to: www.apogeerockets.com/body_tubes_and_rings.asp

F10 LONG-BURN MOTORS

The F10 Long burn duration motor is intended for use in low mass, extreme-altitude rockets. If you use the long burn F10 motor, it echoes and echoes and echoes as it ascends slowly and majestically. It isn't one of those punch-in-the-gut, high-speed flights. It will get your lightweight projects off the ground and have observers wonder which rocket is still going and going! Immediately available for shipping! Go to: www.apogeerockets.com/composite_motors.asp

QUESTION AND ANSWER CORNER

How does gradual deployment work?

Gradual deployment, like the name, is designed to open the parachute gradually (slowly), so the parachute is not ripped apart. When you pack your parachute so that it snaps open, this is not gradual deployment. Snapping a 'chute open puts tremendous stress on the lines and the attachment of the lines to the 'chute itself. Have you ever had a stripped parachute? This is often due to non-gradual deployment. The goal is to stretch out the parachute lines before the canopy opens. This eliminates the 'snap' that strips the parachutes. How do you do it? One idea you can experiment with is a 'sliding reef' technique. First, cut a small piece of tube (try the Apogee airframe tube 13mm, 1" long) and tuck the shroud lines into it. Then slide the lug (reef) all the way up to bottom of the canopy.

Now the 'chute can't open but a small amount. As the parachute begins to fill with air, the reef will slide down the shroud lines allowing the 'chute to open more. You will have to experiment to get the correct length and diameter of reef to get the right slide rate. The result is a gradual deployment, which allows the shroud lines to be stretched out before the canopy completely opens.

To purchase nylon parachutes go to: www.apogeerockets.com/parachutes.asp

If you have a rocketry-related question, please e-mail me at johnm@apogeerockets.com