ISSUE 151 - NOVEMBER 7, 2005

APOGEE PEAK OF FLIGHT NEWSLETTER

How To Be More Productive During the Cold Weather Building Season

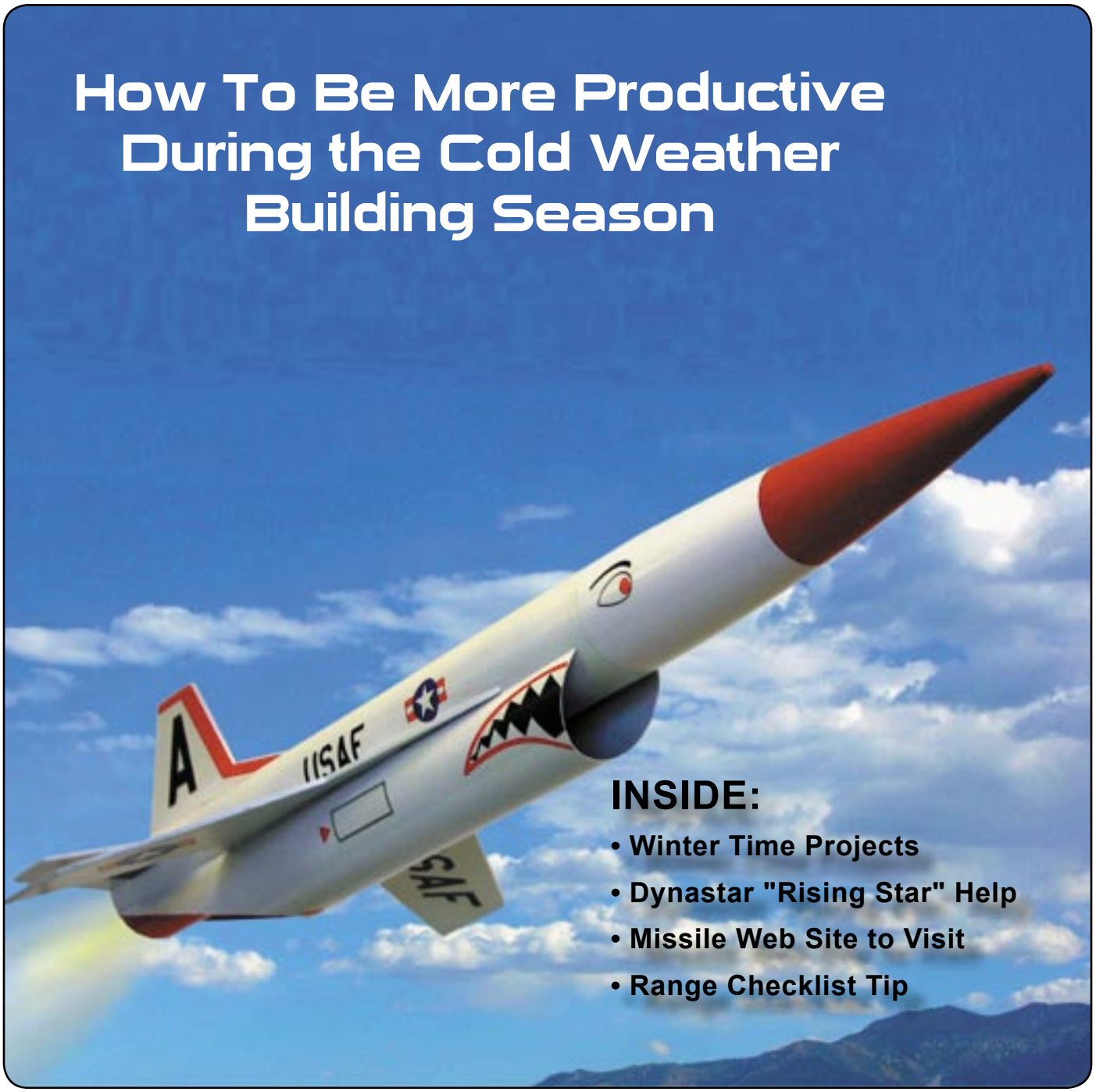

INSIDE:

- Winter Time Projects
- Dynastar "Rising Star" Help
- Missile Web Site to Visit
- Range Checklist Tip

Apogee Components
1130 Elkton Drive, Suite A
Colorado Springs, Colorado 80907 USA
www.ApogeeRockets.com e-mail: orders@ApogeeRockets.com
phone: 719-535-9335 fax: 719-534-9050

Winter Time Projects

by John Manfredo

♫ Oh, the weather outside is frightful..... ♫

It's that time of year again for many of us. What we rocketeers like to call "building season". That time of year when we put up the launchpads and motors, and instead pull out our tools and start working on our rocketry projects for next year's "flying season". I thought it might be nice to talk about the many tools that rocketeers use to create their new flying wonders!

Hobby Tools

To begin with, what rocketeer is complete without his own version of the RockSim computer software? This should always be the proper way to start any design! It saves you time and money because by predesigning and simulating your latest creation's flights you will be able to see how the rocket will perform before it is made. This, in turn, will allow you to correct costly mistakes before they happen!

Use the Rocket Software

If you've never tried this before, try the free demo download at http://www.apogeerockets.com/rocksim_demo.asp.

A wood lathe is great to have if you are able to purchase one. This handy machine will allow you to make your own wood nose cones in a flash! I understand that this is more of an "exotic" machine that is out of the budget of many of us. I use my father-in-law's because

Band Saw

he happens to have an awesome woodshop. Due to the fact that this isn't the situation with most rocketeers, Apogee Components has the next best thing! Mr. Rocket produced a CD Rom called *Making Custom Nose Cones with Simple Hand Tools*, which can be purchased at http://www.apogeerockets.com/make_nose_cones.asp.

If you can get your hands on a band saw or scroll saw, do it! These are great for cutting out the rough shapes of components such as centering rings or fins, especially if they are larger projects using plywood for these items. Then, if you have one, use a belt/disk

About this Newsletter

You can subscribe "FREE" to receive this e-zine at the Apogee Components web site (www.ApogeeRockets.com), or by sending an e-mail to: ezine@apogeerockets.com with "SUBSCRIBE" as the subject line of the message.

Belt and Disk Sanders

sander to take down more of the material so that the final sanding is much easier. You can pick one up at most hardware stores for under $100.00, and boy, are they great to have! They save a lot of elbow grease!

These machines can also be used for pre-finish sanding after you have carved out a nose cone on a lathe! I have also used a lathe in the past to take down the shoulder of a plastic nose cone that wouldn't quite fit into a mailing tube that I had turned into a rocket.

However, with our supply of body tubes and nose cones, this is not necessarily. You can find a huge assortment of building supplies at http://www.apogeerockets.com/building_supplies.asp.

The Multi-Purpose Dremel

Another tool that is so nice to have is a "Dremel". This multi-purpose tool has a plethora of attachments that will allow you to do anything from drilling holes to sanding the inside of centering rings to cutting and scraping.

Wood Filler

Two of the most used things for builidng model rockets are the hobby knife and "Elmer's Fill n' Finish" or "Wood Filler". You should have quite a few hobby knives around your workshop as the different sizes and shapes can go a long way to easing your construction process. The filler is so handy to have to fill in those nasty spirals on body tubes as well as sealing the fins before priming and filling in-between coats of primer. As shown at left, one of my favorite items to use when building my latest creation is the "Fixit" epoxy clay. This stuff is so useful in a variety of ways! Once mixed together, the clay can be shaped, rolled, stretched, or sculpted. It sets rock hard overnight, and than can be machined, drilled, tapped, sanded, or painted. It is water-proof, and has 0% shrinkage! You may find it at http://www.apogeerockets.com/construction_supplies.asp.

Epoxy Clay

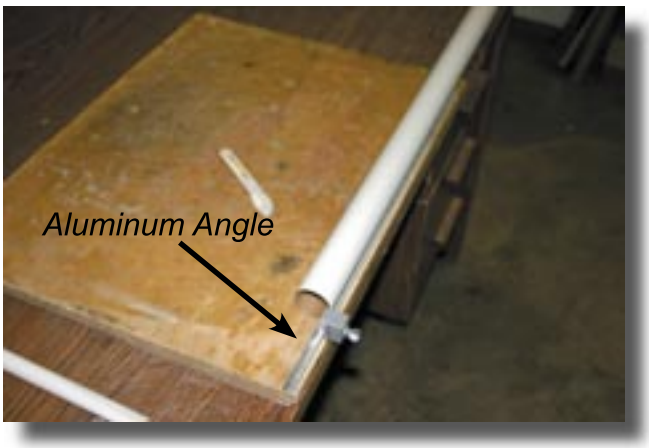

Tube Cutting Metal Angle

The last thing that I would like to mention is the "metal angle" used for marking lines on tubes and cutting tubes, just to name a couple of uses.

I would love to hear from other modelers and find out, "What's in your shop?" It benefits all of us rocketeers. So please let me hear from you and be a part of "Paying Forward" to the next generation!

John Manfredo is the Education Coordinator at Apogee Components. He's Level 1 High-Power Certified and has been building his own rockets for the last 30 years.

DYNA STAR
Mid-Power Rockets

THE COUNTDOWN HAS BEGUN!

.....EVERYTHING IS STAGED AND READY FOR LIFTOFF.....

WWW.DYNASTAR-ROCKETS.COM, OR CALL 719.535.9335
1130 ELKTON DR. SUITE A COLORADO SPRINGS, CO 80907

Christmas is Around the Corner!

*Believe it or not, the holidays are approaching us fast and we at Apogee Components want to make sure that your orders arrive to you or someone you love on time! Get your orders and / or **your wish lists** to your loved ones early.*

Please keep in mind that due to shipping regulations on items such as motors, we suggest that you order sooner than later! These gifts need to be shipped via ground mail and can take up to 2 weeks to reach their destinations; possibly longer during this time of year. We certainly don't want anybody to be without their rocket goodies on Christmas morning!

If you're looking for some cool "stocking stuffers", Apogee has what you need: RockSim software, Epoxy clay, Altimeters, Engine hooks, Parachutes, or our new Gift Certificates for those of you who just don't know what to give your rocketeer.

Please visit Apogee's website www.apogeerockets.com for futher ideas and larger gifts for under your Christmas tree! Whatever your tastes are, we can help you find something rocketry-related!

WEB SITES WORTH VISITING

I have a treat for all you history buffs out there! For those of you who are into the history of missiles, there is a website located at: http://www.geocities.com/titan_2_missile/index.html that takes you through the interest-

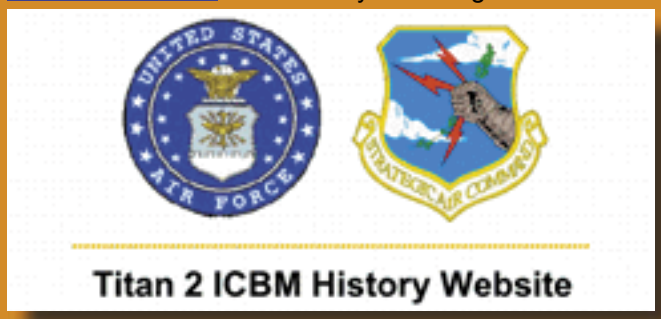

ing past years of our missile programs. This covers not only the Titan II ICBM but also has links to the Titan I, Jupiter, Minuteman, Peackeeper, Redstone, and THOR ICBMs. As shown below, there are many diagrams of these missiles, which show the main structure, the powerplant, the overall Titan family of missiles side-by-side, and the entire underground silo complex. You will find a "Chronology" section that takes you through the program from 1958 to 2003 with launches, altitudes reached, accidents, and where each flight was launched from.

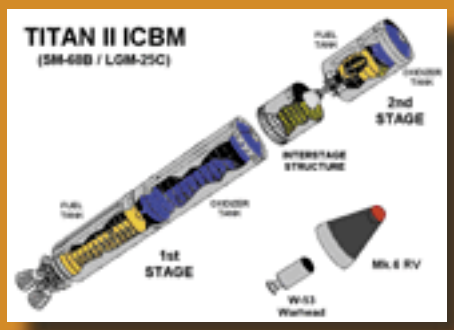

The "Displays" page shows photos and locations where you can actually go and see some of these vehicles up close and personal! A real treat that is accessible from here is the "Video" page where you will find

Quicktime video that you may view or download of Titans launching from pads or silos! Some of these are vintage black and white newsreels where you can even see the missile spinning quite clearly! If you are a fan of these vehicles, I'm sure you will enjoy this website.

DEFINING MOMENTS

A “built-up” fin is strong and lightweight, made generally hollow, with judicious placement of high-strength structural members inside an outer skin. The advantages (if it is built properly) are low weight and high strength. Built-up structures are mainly used on large wings or fins, where weight reduction can be substantial. The spars carry bending loads, the ribs give support and contour shape to the skins, and the skin gives the wing an outer cover.

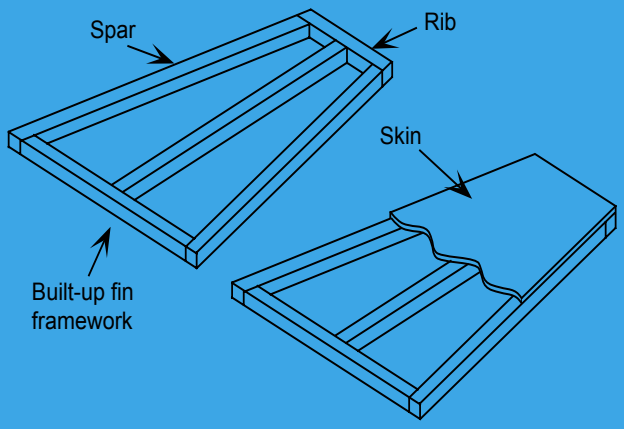

QUESTION AND ANSWER CORNER

The question for this issue revolves around the coupler for the Dynastar Rising Star mid-power kit. It is obvious that the fit is not quite perfect.Rest assured, fellow missile men, future supplies of these couplers will be adjusted in their size to be just right!

But hey, we rocketeers are all craftsman in our own right and shouldn't get too wound up about this issue. There is a simple workaround for this.First of all, let's look at the coupler fit to begin with. As you can see in picture 1, the coupler does indeed have a problem going into the payload tube. That's ok, though, because it needs to be tight anyway.

Picture 1

The technique I use is to take the coupler and mark it halfway as shown in the instructions. Then insert it into the payload tube as much as possible except for the last little bit of the circumference. Then, as shown in picture 2, take your fingers slowly and carefully work the part of the coupler that is hanging out into the payload tube.

As soon as you get the coupler into the tube just so that it hangs most of the way out, go ahead and put your glue on the coupler. Then set the components onto a table or other solid surface, as shown in picture 3, with the coupler face down. Now you can push down evenly on the payload tube until the coupler is into the payload tube just up to the line you marked.

Picture 2

Picture 3

Next, as shown in pictures 4 and 5, take a hobby knife and carefully peel up the red layer on the coupler tube. Then lift and peel it off all the way around the coupler until you reach the payload tube.

Once you have this accomplished, you should notice that the coupler fits into the main body tube just right as you can see in picture 6! Something else you should consider doing is to wick thin superglue onto the exposed coupler and then sand it down. This will get rid of the "fuzzies" and help the rocket separate easier during deployment.

Picture 4

Picture 5

Picture 6

TIP OF THE FIN

This issue's tip revolves around a situation that happens more often than not. You're out at the range and you're in a hurry; maybe a little frazzled trying to get your rocket prepped. Time is running out before the range closes and you *really* want to get this flight in; you've been waiting 5 months to get this project done and in the air!

Unfortunately, due to the fact that you rushed through the prep, you forgot some critical step. I know because I've been there! Shown below is an example

One of My Unsuccessful Flights

of what happened when I didn't recheck my nose cone fit and it wound up being too tight to pop out of the rocket.

Over the years I can name things that I've forgotten such as recovery wadding, connecting the shock cord's quicklink to the payload section, and leaving grease on my hands when handling the ejection charge just to name a few. It is so easy to forget something even when you've been launching for years!

Check, Please!

My tip for this issue has to do with rocketry checklists. A checklist in your rangebox on launch day is an essential, especially for larger projects. Not only will you wind up with a very damaged project but safety really enters into the equation with larger size rockets.

Lists, Lists, Lists...

Oh no, not another list of things to do! Don't worry, this list has a lot of fun things on it! These are things you should look at putting on your range checklist:

1. If you have electronics, make sure you have a fresh battery and that the device is armed and ready before you leave the pad.

2. Make sure your nose cone or upper airframe is connected securely to the main airframe. Without this attachment you will no doubt see your rocket recover in two sections with a parachute on only one side.

3. Is the parachute attached to the rocket? I think we all know what happens when we forget to do this.

4. Did you remember the recovery wadding? If not, you'll be like me and the ejection charge will burn through the shock cord and once again the rocket will come down with a parachute on only one side!

5. Is the ejection charge loaded in your reload engine? No charge equals no ejection!

Prep Time Is Not a Race...

6. Are your hands staying clean of grease during reloadable motor building? If not, you may as well have forgotten the ejection charge anyway. Grease + delay grain = no ejection.

This is in no way an all-inclusive list, but hopefully it will get you started. You'll find a list for even simple rockets to be beneficial. Check out the Apogee Countdown Checklist at: http://www.apogeerockets.com/data_sheets.asp. See also http://www.apogeerockets.com/education/flying_tips.asp where you will find other tips to ensure more successful flights!

LAUNCH EXCITEMENT INTO THE CLASSROOM!

Download FREE Demo! www.RockSim.com

TEACH SCIENCE, PHYSICS AND MATH WITH THE DESIGN SOFTWARE, ROCKSIM!

ROCKSIM

CERTIFIED SPACE EDUCATIONAL PRODUCT™

Design the rocket

WITH ROCKSIM SOFTWARE YOU CAN:

- Design, simulate and build real flying rocketss.
- Find out how high and fast your rocket will fly!

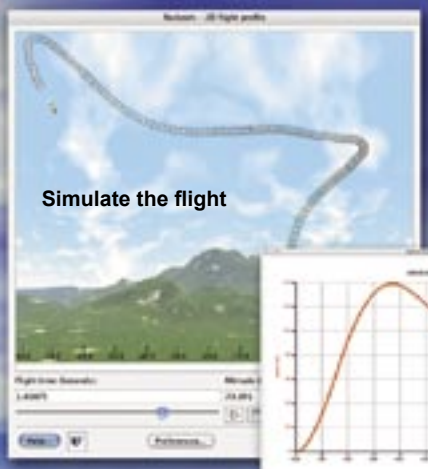
Simulate the flight

Examine the results

WHO USES ROCKSIM?

- Over 856 schools in the U.S.A.
- Aerospace engineers.
- Rocket enthusiasts all over the world.

IS IT EASY TO USE?

RockSim is user friendly and can be used by students ages 10 and up.

Mac

Site licenses available for shools

APOGEE COMPONENTS
EMAIL: ORDERS@APOGEEROCKETS.COM
WWW.APOGEEROCKETS.COM
1130 ELKTON DRIVE, SUITE A
COLORADO SPRINGS, COLORADO 80907 USA
PHONE:719.535.9335, FAX: 719.534.9050