ISSUE 154 - DECEMBER 30, 2005

APOGEE PEAK OF FLIGHT NEWSLETTER

Simulating Short, Wide Rockets in Rocksim 8

INSIDE:

- Bruce Levison Guest Feature
- Perfectflite Altimeter Help
- Web Site Worth Visiting
- Small Payload Bay Tip

APOGEE COMPONENTS

1130 Elkton Drive, Suite A
Colorado Springs, Colorado 80907 USA
www.ApogeeRockets.com e-mail: orders@ApogeeRockets.com
phone: 719-535-9335 fax: 719-534-9050

Simulating Short, Wide Rockets in Rocksim 8

by **Bruce S. Levison**

The Simulation of Short Wide Rockets using RockSim Version 8: An Additional Base Drag Consideration for Rockets With Less Than a 10:1 Length to Diameter Ratio.

Bruce S. Levison has asked us to share this article with other RockSim users. It describes a method that he feels will help to simulate the Short-Wide Rockets (like spools, cubes and pyramids) in RockSim. While this treatment is based on wind tunnel data collected for spool shaped rockets, Bruce feels that the CP will be in the right location on these other types of rocket designs. Please note: The user assumes all risk for the information obtained with this method.

The approach I mention in this article is based on an average consensus for the center of pressure (CP) of a flat plate in a perpendicular airflow. Any inaccuracy in this CP value will drastically affect the simulation results using this approximation.

Aerodynamic Texts

Various aerodynamic texts confirm the fact that the dynamic Center-of-Pressure (CP) of flat plate lying perpendicular to a flow, lies behind the plate along its central axis, due to a base vortex that forms when the air begins flowing over its surface. Published data shows the CP for a flat plate in a perpendicular flow is about 2.2 diameters behind the plate along the axis perpendicular to the face of the plate through its center.

We can simulate this in RockSim by adding a "massless" conical-transition attached to the circular flat plate as shown in Figure 1 below.

It is not proper to suggest this would be the static center of pressure a flat plate because this effect is dy-

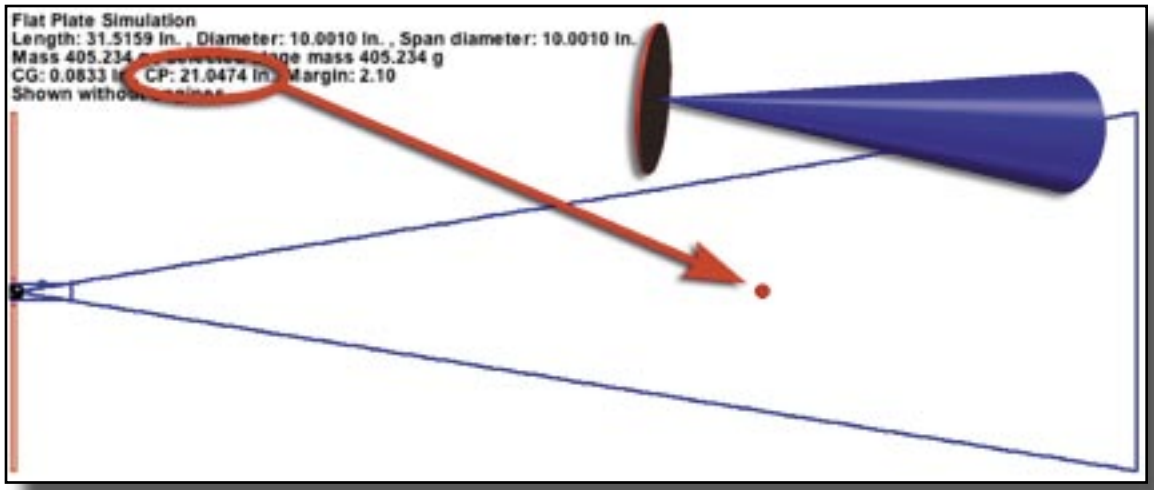

Figure 1

continued on page 3

About this Newsletter

You can subscribe "FREE" to receive this e-zine at the Apogee Components web site (www.ApogeeRockets.com), or by sending an e-mail to: ezine@apogeerockets.com with "SUBSCRIBE" as the subject line of the message.

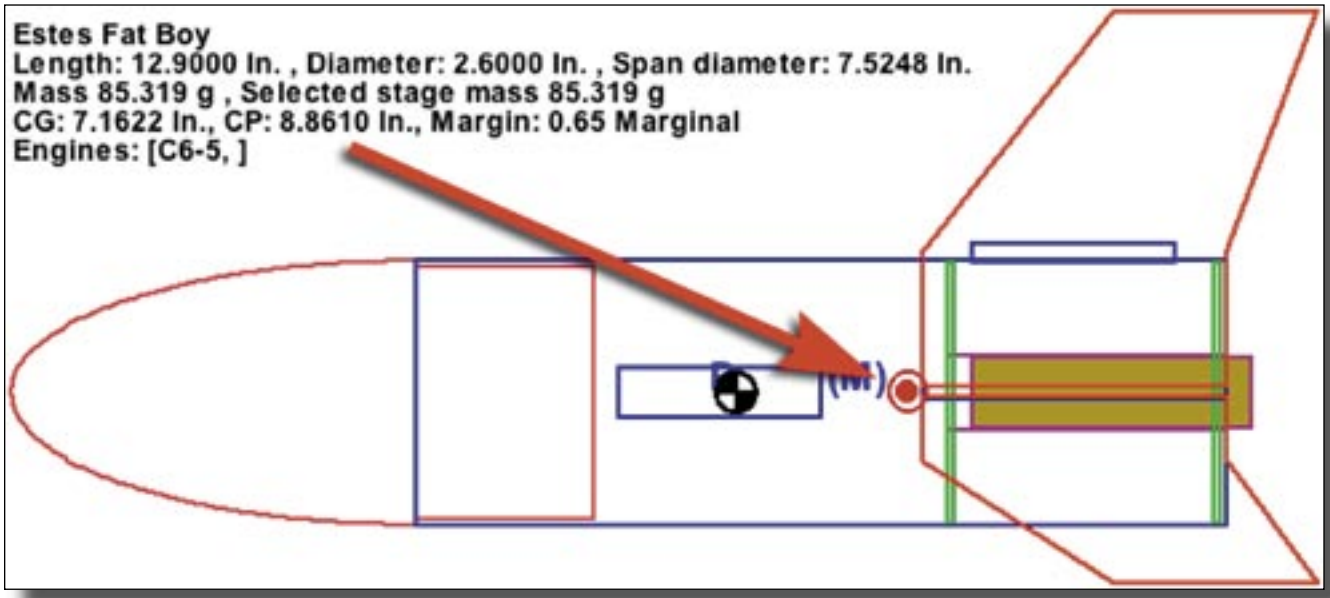

Figure 2

namic, only present when air flows over the face of the plate. The CP values for a flat plate vary widely presumably because of the difficulty of obtaining an accurate CP measurement that requires the use of a long sting or lever arm in a wind tunnel.

Now that we have an estimate for the CP of behind one flat plate one can use this value to estimate the base vortex effect on the CP for short fat rockets like the Estes FatBoy (Figure 2). For short wide designs, rockets where the length to diameter ration is much less than the normal 10:1, a single flat plate represents the worst-case scenario for effects of the base vortex on CP.

Report on Wind Instability

Robert Galejs' report on "Wind Instability What Barrowman Left Out" mentions that the stability margin of the stable Estes Fatboy design is less than one caliber. Correcting the Barrowman equation CP of the short-wide FatBoy design with the flat plate base vortex effect would obviously bring the CP further aft.

To force a flat plate to have a CP 2.2 diameters aft in RockSim you can use a "mass less" transition attached to the aft side of the plate that is pi diameters long with

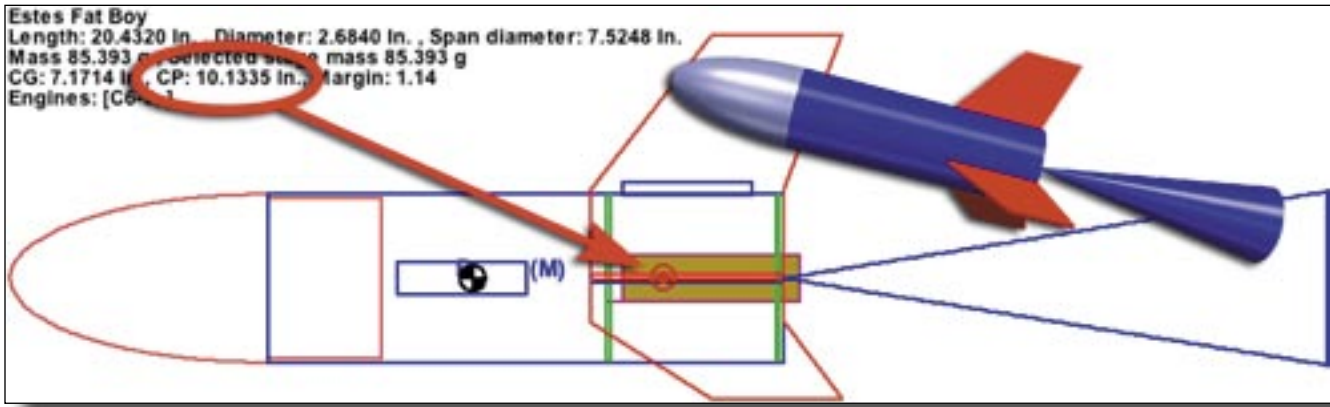

Figure 3

continued on page 4

a minimal (0.001 inch) upper or forward diameter and a base (or aft) diameter the same diameter as the plate itself see figure 1.

Applying this correction to the Estes Fatboy launched on a C6-5 motor (see figure 3, note stability margin of 0.67) moves the CP aft to give a stability margin of 1.14 (see figure 3.) This means the Estes Fatboy design should fly stable without any added nose weight on a C6-5 motor (as everyone knows it will)!

It is interesting to note that the base vortex correction brings the stability margin of this design to just over one where the rules of thumb for a stable design dictate that it should be.

Bruce S. Levison (NAR #69055, MTMA #606) is a rocketeer from Ohio, and a member of the National Association of Rocketry (NAR). He has published numerous articles on model rocketry, related to the many practical aspects of the hobby. Bruce enjoys tricking the RockSim software into performing simulations of non-standard rocket designs. Bruce earned an advanced degree in chemistry and works as a research scientist at the Cleveland Clinic Foundation.

Bruce S. Levison

WEB SITES WORTH VISITING

Last issue we visited the Aussies down-under. This issue we jump on a plane and travel over 11,000 miles to the country of England to see what they are "up to" in rocketry. For this adventure tune your internet channel to http://www.blackknights.org.uk/ and you'll get a good taste for what the Brits have to offer! These lucky chaps

have the good fortune to have not 1, not 2, but 3 launch fields! We blokes in America would love to have that problem! This affords them the use of areas from a farm to an airstrip to launch from with lots of open land around them. The pictures do these sites justice as they are very picturesque. I'm not sure what their launch site altitude limit is, but their flight records pages show that they launch anything from "A" through "K" motors and

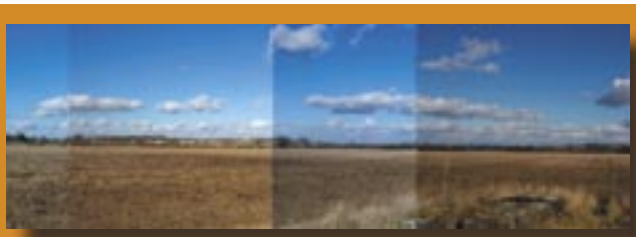

everything in between year 'round! The photo above shows a view of one of the sites. They have many pictures from launches posted, along with some nice videos of their interesting projects taking to the skies. As you can see in the photo below, their group is very enthusiastic about their hobby! I must say, "a jolly-good

hats off" to them for providing a "top billing" link to Apogee Components on their rocketry software page for Rocksim! It's nice to know that the British think highly of our Space Foundation-certified computer software! If you would like to try a free demo of Rocksim, simply go to http://www.apogeerockets.com/rocksim_demo.asp

DEFINING MOMENTS

Cluster Wiring is the method you use for wiring up clustered motor arrangements on rockets that are fitted with 2 or more motors. In the diagram you can see that wiring clusters are done in parallel as opposed to series; meaning that all of one lead of the wires are linked together and the other leads are also linked together. For two-motor clusters all you need to do is twist one leg of each igniter together. You'll end up with two 'tails' consisting of the two igniter leads, which you hook up to the launch controller clips. Just like in the left part of the diagram. For three and four engine clusters (or more complex motor arrangements), you're going to need a set of *clip whips*. We'll discuss this in the next issue. Stay tuned.....

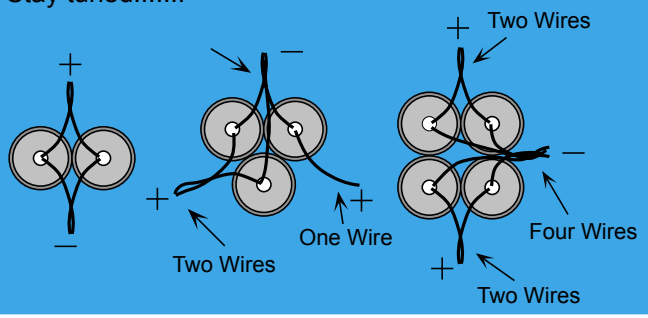

QUESTION AND ANSWER CORNER

The question for this issue comes from a customer regarding the Perfectflite altimeter that we sell. They write, *"We purchased the altimeter and were wondering if it only records one flight at a time?"*

The answer is yes. The unit only has enough memory on it to store one flight at a time. If you want multiple flights, you really need a laptop on the field to download the data between launches. If you are miles from your computer and you fly the rocket several times you would need to download the altimeter into the computer program after each flight. The other option for multiple flight is to listen to the beeps and write them down. Then when you arrive home, you could download the information from the last flight.

If the information from the altimeter is different when you get home, it is possible that if you left the unit on during the trip home which might cause the unit to accidentally reset itself (like it would when it senses a launch). So the last data on it would be of the car ride home.

You must understand that the unit uses FLASH memory. That means you can turn it off (by removing the battery), and the data from the last flight will still be on it when you put in the battery when you get home. If you need to take it home to download the data, remember to pull out the battery. There is another issue to be aware of with barometric altimeters like this. It's possible that you get the rocket ready, put foam around the altimeter and by the time you get it into the payload it already starts beeping.

The reason this could happen is that the unit senses pressure changes in the air. It is very important to put the nose cone on very slowly. That way, you don't accidentally pressurize the inside part of the rocket. Actually removing the nose cone is even more sensitive. So if you pull the nose off for any reason before you get to the launch pad, you'll have to reset the altimeter. It has to be sensitive because the pressure differences in the air are very small. The altimeters are in high demand because they work great. If you want to get more good information, just re-read the instruction booklet for some tips on using the altimeter. I always pick up some good information in it too. To order this unit go to http://www.apogeerockets.com/Altimeter.asp

Perfectflite Altimeter
Part #09102

Only $75.00!

TIP OF THE FIN

While we're on the subject of altimeters, it would be a good time to illustrate how an altimeter bay may be constructed from a simple and small kit such as the Apogee Blue Streak http://www.apogeerockets.com/Blue_Streak_rocket.asp. To begin, take the body tube and cut a section 3.5" off of one end. This will give you

Figure 1

the 3 sections that you see in figure 1. Shown from the left are: the nose cone, the soon-to-be payload tube for the altimeter, and the new main body tube. Next you will need an 18mm airframe coupler tube http://www.apogeerockets.com/body_tubes_and_rings.asp#airframe-coupler part # 13013 and some centering ring cardstock http://www.apogeerockets.com/body_tubes_and_rings.asp#Centering-rings part # 44001 to make a bulkhead.

Figure 2

As you can see in figure 2, take the 18mm coupler tube, the cardstock and a pencil and draw a circle around the outside of the coupler. Then you can use a hobby knife to cut out the cardboard bulkhead. Now you can take the bulkhead and sand it down as even as possible all the way around until it fits snugly inside of one end of the 18mm coupler tube, which is shown in figure 3. This

Figure 3

should be glued in about 1/8" from one end of the coupler. A bead of glue used as a fillet should be put on the aft end of the bulkhead. Then, make a mark halfway on the coupler tube and glue the coupler into the payload tube up to the halfway mark. This is shown in figure 4.

Figure 4

A hole can be made in the bulkhead for shock cord attachment. As you can see in figure 5, the final product shows the body tube, payload tube and the nose cone. All you need to do is drill a small hole in the side of the payload tube, use a little foam padding for the altimeter, and you're all set for flights with altimeters!

Figure 5

RockSim: Software That Lets You Design Amazing Rockets!

RockSim is the leading software for designing rockets, and finding out how high they'll fly. With it, you can:

- Design Any Size Rocket.
- Use Any Size Motor.
- Create Assymetric Fin Arrangements.
- Tube Fins, Ring Fins, or Custom Shape Fins.
- Add Decals For Pizzaz.
- Print Fin & Ring Templates.
- Find The Best Parachute Or Streamer Size.
- Predict Altitude, Speed.
- Simulate Electronic Staging Events.
- Simulate Dual-Deployment.
- Determine Close-Proximity Recovery Launch Angle.
- Mix Motor Sizes In Cluster Configurations.
- Display 2D Layouts And Rotating-3D Images.
- View Annimations Of The Launch And Recovery.
- Predict C_d and CP.
- Supports Up To 3 Stages Including Strap-on's.
- Graph Out The Results.
- Huge Parts Database.
- Export Flight Data To Any Spreadsheet Program.
- Windows Or Macintosh Computers!
- Use It To Teach Rocketry.
- Hold a Virtual Rocket Contest.

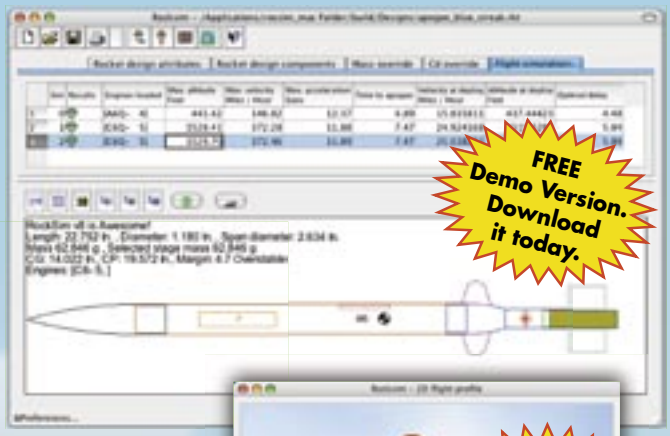

FREE Demo Version. Download it today.

Just $95!
It costs a little more, but it can save you hundreds.

WOW! Your Design Now In the 2D Profile

RockSim Makes Your Rocket Visions Come Alive!

ROCKSIM
Version 8

Apogee Components, Inc.
1130 Elkton Drive, Suite A
Colorado Springs, Colorado 80907-8501 USA

Tel: (719) 535-9335 Fax: (719) 534-9050
Web Site: www.ApogeeRockets.com/RockSim.asp

DYNA STAR

Rip-Stop Nylon Parachutes!

High Strength
Multi-Colored
3 Sizes

Get The Best Prices On Nylon Parachutes

http://www.dynastar-rockets.com/Parachutes.html