ISSUE 157 - MARCH 14, 2006

APOGEE PEAK OF FLIGHT NEWSLETTER

Simulating Short, Wide Rockets Part 2

INSIDE:

- Bruce Levison Article
- Rocksim Guides and Help
- Web Site Worth Visiting
- Homemade Decal Tip

APOGEE COMPONENTS
1130 Elkton Drive, Suite A
Colorado Springs, Colorado 80907 USA
www.ApogeeRockets.com e-mail: orders@ApogeeRockets.com
phone: 719-535-9335 fax: 719-534-9050

Simulating Short, Wide Rockets in Rocksim 8

by **Bruce S. Levison**

This is the second-part of an article that was submitted by Bruce Levison. See Newsletter 154 (http://www.apogeerockets.com/education/downloads/Newsletter154.pdf) for the first part.

The Simulation of Sputnik-like Designs using RockSim Version 8: Application of the Additional Base Drag Consideration for Rockets With Less Than a 10:1 Length to Diameter Ratio and An Aft Taper.

Bruce S. Levison has asked us to share this article with other RockSim users. It describes a method that he feels will help to simulate the Short-Wide Rockets (like spools, cubes and pyramids) in RockSim. While this treatment is based on wind tunnel data collected for spool shaped rockets, Bruce feels that the CP will be in the right location on these other types of rocket designs. Please note: The user assumes all risk for the information obtained with this method.

Refresher

This and the previous article in this series are based upon the assumption that the dynamic center of pressure (CP) of flat plate lying perpendicular to a flow, lies about 2.2 diameters behind the plate along its central axis, due to a base vortex that forms when the air begins flowing over its surface. This is a conservative estimate for the CP value since other mathematical extensions of the wind tunnel data seem to indicate the CP may even be further aft! Again, any inaccuracy in this CP value will drastically affect the simulation results using this approximation.

Base Vortex Effect

Previously I had shown how this estimate for the CP value of a flat plate could be used to simulate an additional base vortex effect on the CP for short fat rockets like the Estes FatBoy. The idea is to add a mass-less transition to the aft end of the FatBoy design, the same added transition that would cause a flat plate of the same body diameter to exhibit a CP 2.2 diameters aft. This trick involved adding an aft cone pi body tube diameters long with a minimal (0.001 inch) upper or forward diameter and a base (or aft) diameter; the same diameter as the body tube diameter (see figure 1). By applying this correction to the Estes

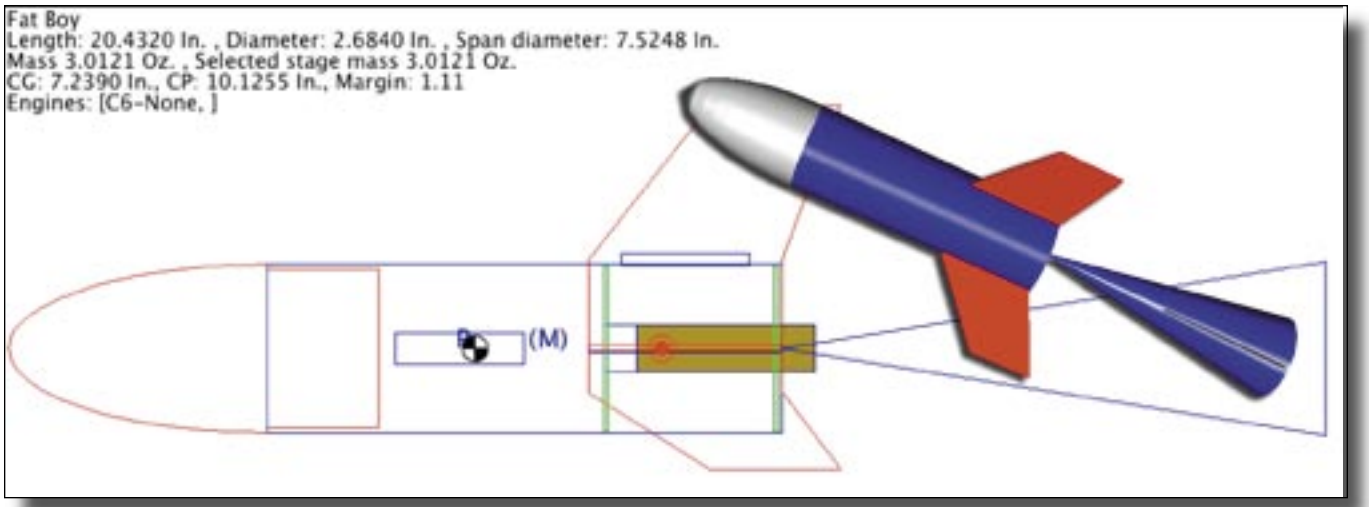

Figure 1

continued on page 3

About this Newsletter

You can subscribe "FREE" to receive this e-zine at the Apogee Components web site (www.ApogeeRockets.com), or by sending an e-mail to: ezine@apogeerockets.com with "SUBSCRIBE" as the subject line of the message.

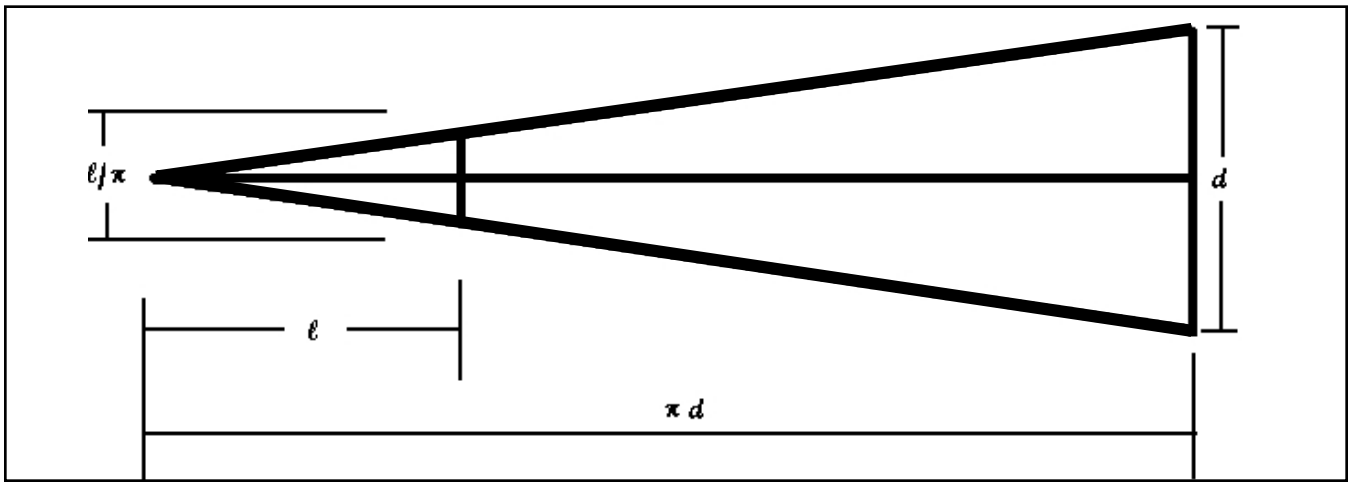

Figure 2

Fatboy launched on a C6-5 motor I was able to bring the calculated stability margin up to 1.14, which is by rule of thumb indicates a stable design in contrast to the stability margin for the unmodified simulation of 0.67.

Aft Transitions

Recently it was mentioned that my short wide rocket simulation article doesn't show how to handle short wide rockets with an aft transition. The base vortex effect will still exist for this design but the tail cone of the rocket will interrupt it. In order to take into account the CP effects of the tail cone and simulate the base vortex effect, the mass-less aft cone can be truncated and the remainder added back at the end of the actual tail cone transition. The frontal diameter of the added

continued on page 4

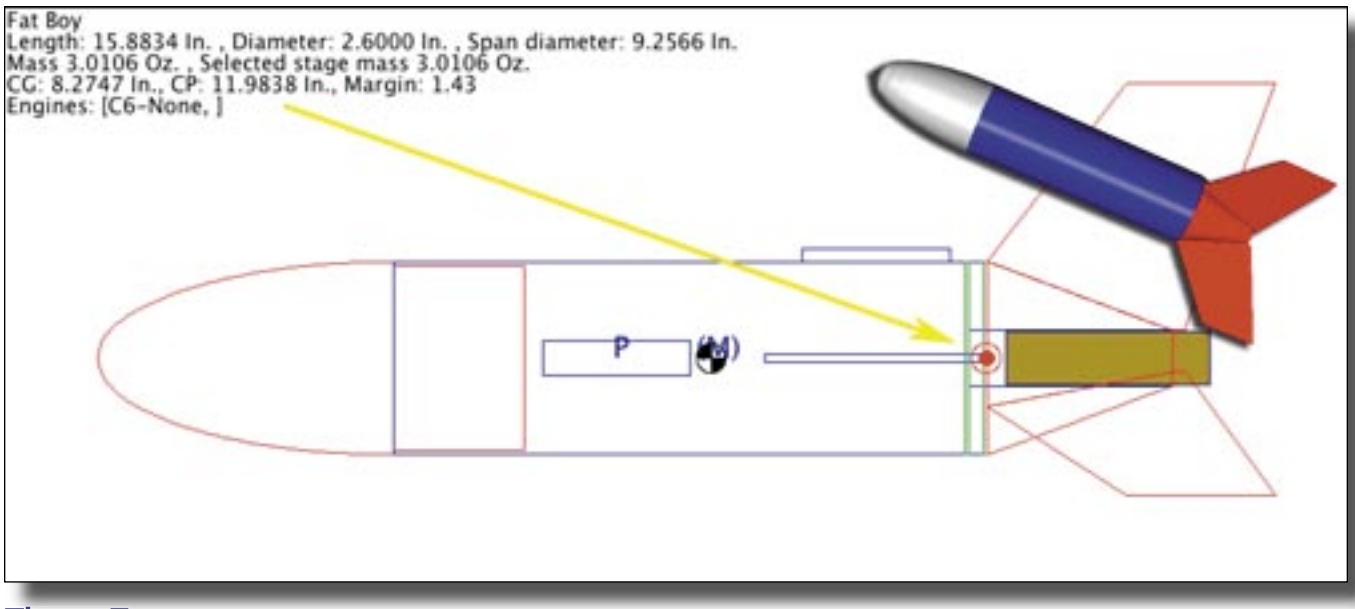

Figure 3

mass-less aft cone at its forward end will then be is the length of the tail cone on the rocket divided by pi (see figure 2). In essence, the length of the aft transition (on the rocket) is subtracted from the front end of the added aft cone (which accounts for the base drag). It is as if the added mass-less aft cone still begins at the widest part of the body, which would be at the forward end of the transition in the modified Fatboy (see figure 3) simulation without added aft cone for base drag and (figure 4) with added aft cone to account for base drag.

Plugging into Sputnik

Extending this concept allows me to simulate a Sputnik design, which is essentially a sphere with four stick legs (fins). The mass-less tail cone can be added to the aft hemisphere of this design in an analogous fashion to that for the tail cone added to the Estes FatBoy design above. Figure 5 shows the Sputnik design with a C6-3 motor loaded has a stability margin is 0.26. Figure 6 shows the same design with the added mass-less tail cone giving a stability margin is 0.98.

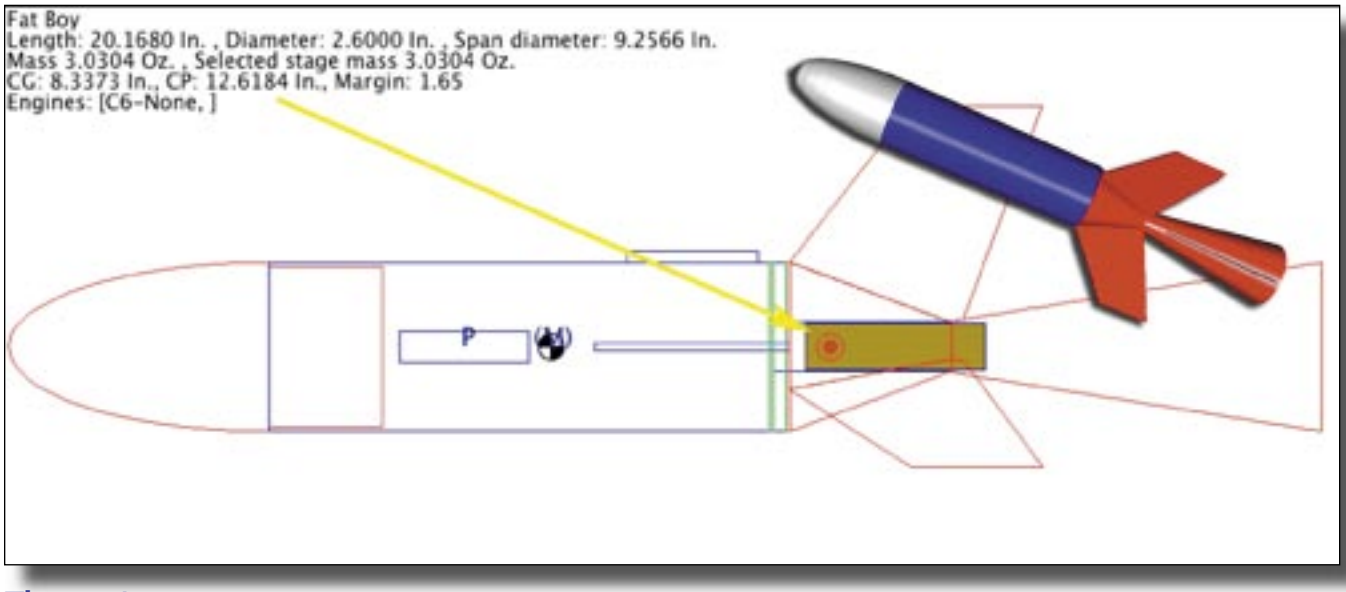

Figure 4

continued on page 5

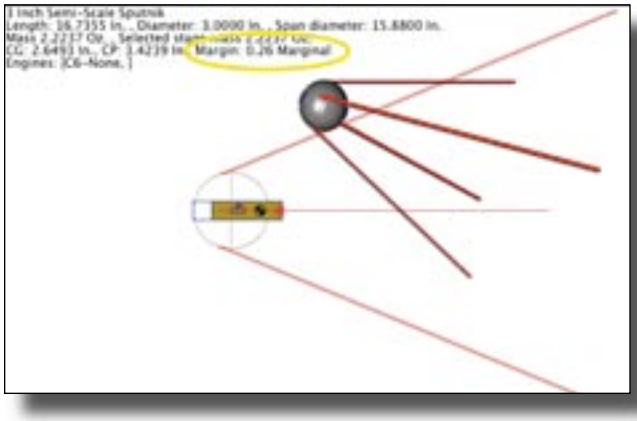

Figure 5

Note that a recovery device had to be added to these Sputnik designs to get a valid simulations. This also shows how to simulate tumble recovery in a model of this type. The recovery device is simulated as a parachute equal to the cross sectional surface area of the model with one 0.001" length shroud line. The Cd of the recovery device was set to the Cd of the rocket

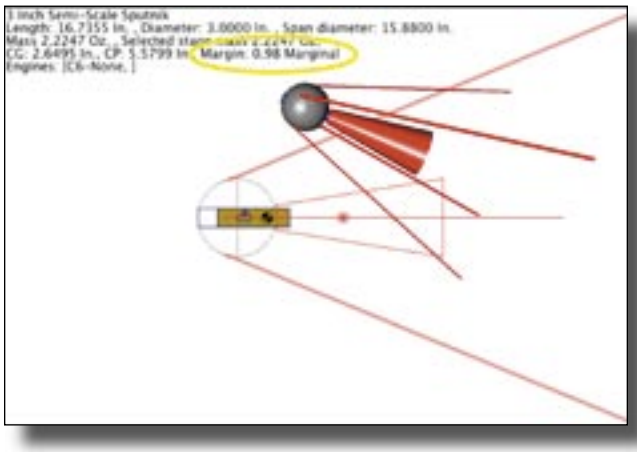

Figure 5

(1.05) from the CD analysis under the Rocket menu. Since the Cd of the faux parachute is the same as that of the rocket, this trick should provide an accurate simulation of the tumble recovery phase of the flight.

Bruce S. Levison (NAR #69055, MTMA #606) is a rocketeer from Ohio and a member of the National Association of Rocketry (NAR). He has published numerous articles on model rocketry, related to many practical aspects of the hobby. Bruce enjoys tricking RockSim software into performing simulations of non-standard rocket designs. Bruce earned an advanced degree in chemistry and works as a research scientist at the Cleveland Clinic Foundation.

Bruce Levison

Quote from NAR - The groundhog saw his shadow and winter drags on with your budding rocket students only dreaming about launching rockets. It's just to cold to get out and fly now, but it's the perfect time to dream, design and build. Get out the drawing board or your computer laptop, and start your kids on their mission. Now's the time to plan your spring launch, school space day or rocket science fair projects. As your kids' design progresses, you will know what parts and materials your class will need and get them so you can start building. Take the time now inside while you have it, so you'll have more time to be outside flying when the warm weather arrives. And it will come, groundhog or not. Aim high. -Vince Huegele, NAR Education Chairman

Editor - *When you are ready to order parts for your rocketry projects, think* ***Apogee Components****, your rocketry experts! We're here to assist you!*

www.apogeerockets.com

Apogee Books Space Series # 45

"This book will bring you up to speed on where we have been, where we are and where we are going in Rocket Science." **High Power Rocketry Magazine**

"...this attractive book will appeal to many." **NewScientist**

"...very well and competently done..." "Highly recommended" **CHOICE**

"...a good and absorbing read." **Spaceflight (British Interplanetary Society)**

The term "rocket science," in its original context, was coined by Alfred J. Zaehringer, an expert in the field. Mr. Zaehringer was one of the significant players in the early days of modern rocketry and has kept pace with scientific progress in the decades since. In this book he takes us on a journey through the development of modern rocketry and space propulsion systems - without intimidating mathematics, and without drowning us in a vocabulary known only to scientists.

ISBN 1-894959-09-4 $20.95
7" X 10", 216 pages,
68 Color photos, 94 B&W photos

APOGEE BOOKS
www.**apogeebooks.com**

"Apogee Books" is not affiliated with Apogee Components. But they do sell some nifty space books, and we do recommend them.

QUESTION AND ANSWER CORNER

One of the questions we get asked frequently is, "Is there help for Rocksim and if so, where is it?" The answer is that there are actually 4 sources and the following will show you where.

The first is on the CD ROM. There are 11 Quicktime videos that will provide you with the basics. These are found in the "Rocksim Help Videos" folder. The second is the "Help Assistant" in the program. You can find this under the "Help" menu and go to "Contents". Number 3 way is shown in the picture at the right. On the Rocksim CD ROM you will also find a folder titled "Technical Reports". Once inside of that, you will find a larger Rocksim help manual called "Rocksim In Depth". This is a guide to all functions and features of Rocksim made to compliment the help menu in the program.

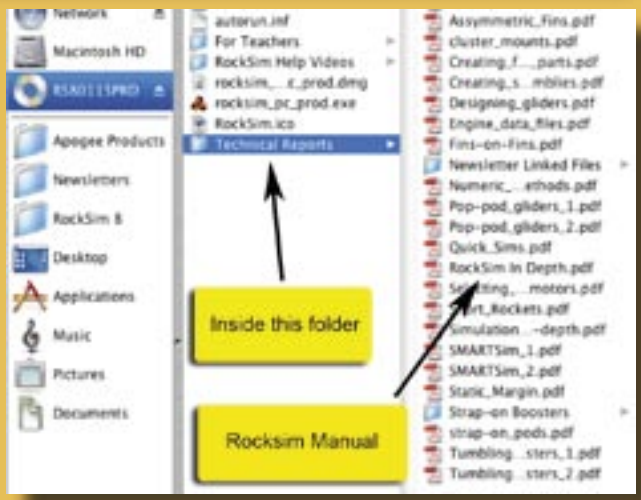

The fourth way to find help is to simply give us a call at 719-535-9335 or e-mail me at johnm@apogeerockets.com. If I don't have the answer for you, I will find it. If you have a question about rocketry-related subjects, please feel free to e-mail me at the address previously mentioned and I will do my best to address it quickly!

WEB SITES WORTH VISITING

The website for this issue that I would recommend that you look through is that of the BGM-109 Tomahawk. You may find it at http://www.fas.org/man/dod-101/sys/smart/bgm-109.htm. You will find lots of details about this missile as well as many pictures of it and 2 videos of it taking off out at sea! The Tomahawk Cruise Missile (BGM-109 or Boosted Guided Missile model 109) is a very accurate, unmanned, expendable subsonic aircraft for delivering munitions at more than 700 miles per hour to a target more than 900 miles (1,458 kilometers) from its launching point. The newest version can loiter near the target for about two hours, waiting for the target to show itself. It may be launched from either surface ships or submarines. During Operation Desert Storm in 1991, 288 of the $600,000 Tomahawks were launched against targets in Iraq. In Operation Iraqi Freedom,

more than 750 of the missiles have been launched. The Quest Tomahawk that we sell here at Apogee is a beautiful model to both display and fly! You may find it at http://www.apogeerockets.com/quest_tomahawk.asp

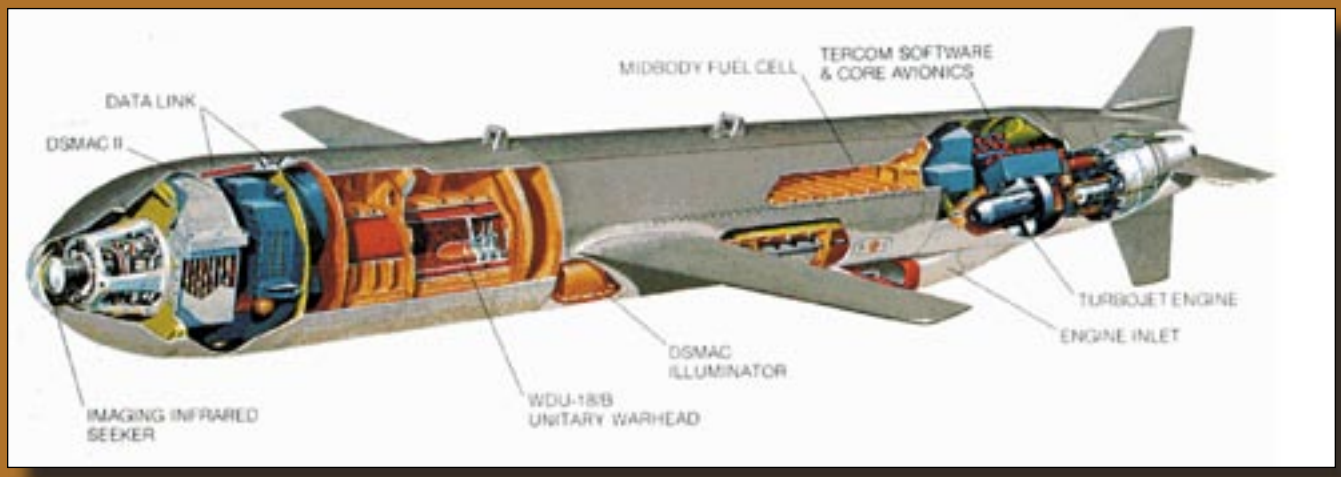

DEFINING MOMENTS

Spin Stabilization is correcting instability by attempting to cause the rocket to spin on the way up. The spinning action creates angular momentum, which provides inherent stability (think of a toy spinning top). The spinning also cancels out any unbalanced forces acting on a rocket, such as one fin causing more lift than another. Spin stabilization can be done in 3 main ways. The first is to add "spin tabs" on the aft end of the fins. The second is to "cant" the fins which is to set them at an angle to the line of the body tube. The third way is to sand each of the fins so that they have a cambered airfoil shape to them. The drawback of spinning to keep in mind is that the overall drag will increase, which makes the altitude of the rocket decrease.

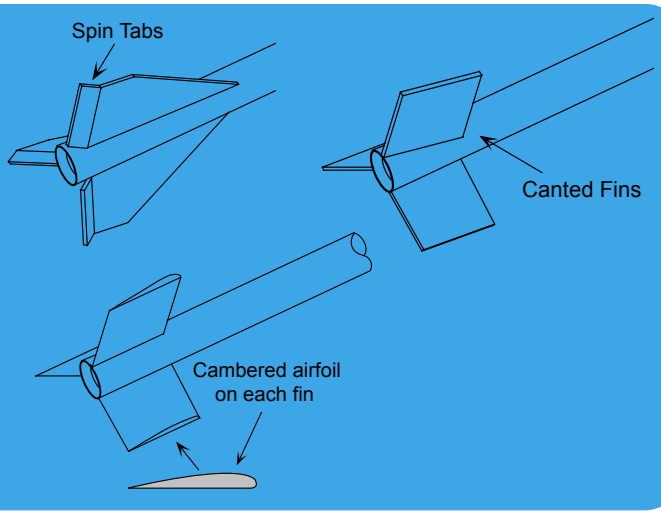

RockSim: The Software That Lets You Design Amazing Rockets!

FREE demo version. Download it today.

RockSim is the leading software for designing rockets, and finding out how high they will fly. Here is what rocketeers are saying about it:

"After a lot of searching on the Net, Rocksim is the best rocketry simulation software I have seen. In terms of sophistication, 'Rocksim' is to 'VCP' as 'VCP' is to 'cutting out pieces of cardboard'." – Brian Crosse

Launch Success Begins with RockSim

- ***Dream It***
- ***Design It***
- ***Simulate It***
- ***Build It***
- ***Fly It.***

CERTIFICATION SPACE EDUCATIONAL PRODUCT™

Space Foundation certified as an excellent teaching aid.

ROCKSIM

www.RockSim.com

For further information, call Apogee Components at: 719-535-9335.
Mention this ad for a free CD-ROM of RockSim how-to videos.

TIP OF THE FIN

Have you ever needed a specially-shaped decal or maybe you want just a little bit of trim color to add to your favorite model? Here is a very easy method of doing this very thing! Start by getting some clear labels for laser printers with a matte finish. These are full sheets and are a bit more heavy-duty than some others.

Next, as seen in picture 1, choose your favorite color for the trim or decals in question, and spray a sheet

Picture 1

thoroughly so that it achieves a glossy, wet finish as seen in picture 2. Allow this to dry completely. If you don't, you will wind up having a mess as you try to do the next step in a wet, sticky pool of paint. Just to play it safe (depending upon how thick you put the paint on), leave it to dry overnight.

Picture 2

Now, what you will do next is decide what shapes are needed to cut out of this sheet. For our purposes here I needed some trim colors and instead of trying to mask off the affected areas, I decided this was a much easier alterna-

Picture 3

tive. Picture 3 shows me cutting strips that I measured off all at once rather than doing it over and over. My finished products for this rocket are shown all cut out in

Picture 4

picture 4. Make sure that you use a new, sharp hobby knife in order to get clean edges!

Picture 5

Last, but not least, picture 5 shows the decal as it is being placed on the fin. This really adds some very nice detail to the model without the extra hassle of trying to mask off the areas!