Apogee Components

PEAK OF FLIGHT

NEWSLETTER

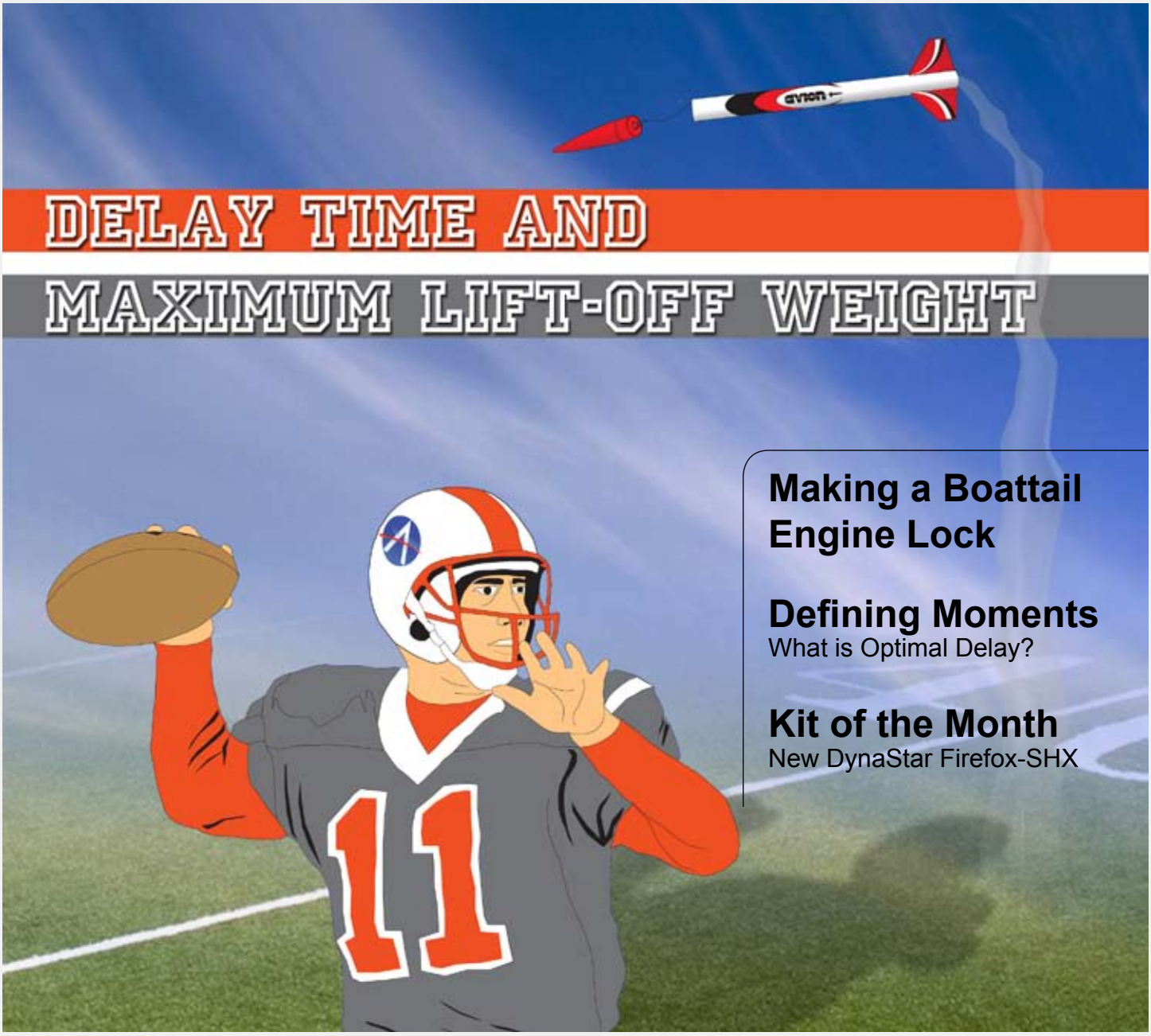

Making a Boattail Engine Lock

Defining Moments
What is Optimal Delay?

Kit of the Month
New DynaStar Firefox-SHX

3355 Fillmore Ridge Heights
Colorado Springs, Colorado 80907-9024 USA
www.ApogeeRockets.com e-mail: orders@ApogeeRockets.com
Phone: 719-535-9335 fax: 719-534-9050

ISSUE 201 JANUARY 29, 2008

PEAK OF FLIGHT

DELAY TIME AND MAXIMUM LIFT-OFF WEIGHT

By Tim Van Milligan

There seems to be some confusion among modelers as to the correlation between a rocket engine's delay time and how much weight the motor can lift.

To be honest, the confusion arises not from traditional rocketeers, but from people that are doing "special projects" that happen to use model rocket motors. For example, it might be a person launching a rocket-powered car down a horizontal track. They might be looking for the biggest, baddest rocket motor that will push the car the fastest.

When these people go to the engine selection chart on the Apogee Components web site, they simply go down the chart and pick the motor that has the highest lift-off weight.

At some point, they realize that they need a delay in the motor, and that throws them into confusion. They don't understand the correlation between the delay time and the recommended Maximum Lift-Off Weight.

The first misconception that needs to be eliminated is that the actual weight of the motor has anything to do with the maximum lift-off weight. For some reason, many people think that the few grams difference in the delay weight in the motor is the reason that the maximum lift-off weights are different. It's not.

The reason the maximum lift-off weight changes with the delay is the amount of time the rocket coasts upward. Think of it this way...

If you were a football quarterback, which ball do you think you could throw farther, a lightweight one, or a heavy one? Obviously, it is the lightweight ball that you can throw further.

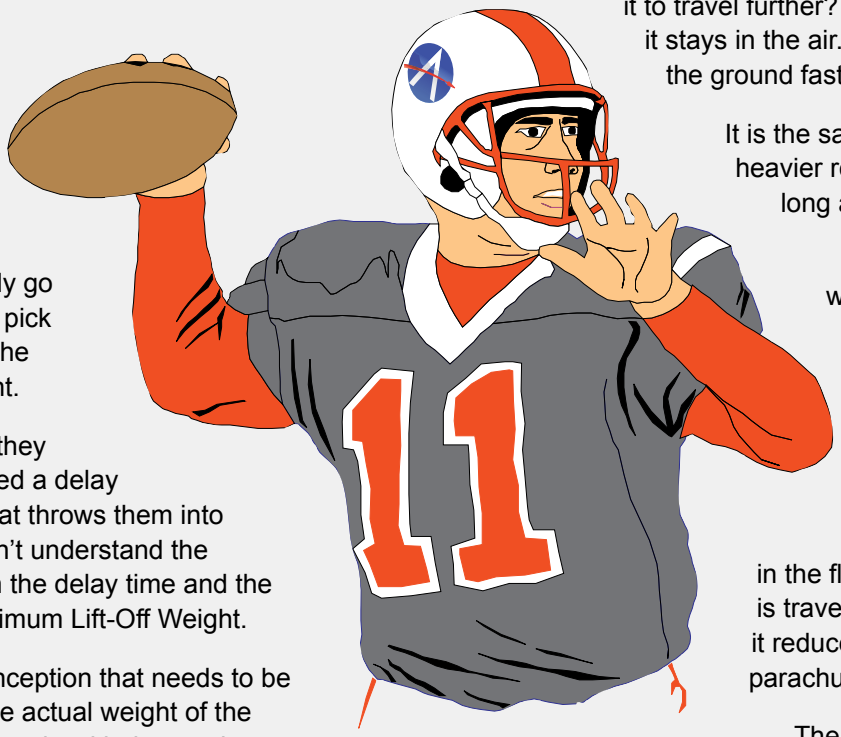

What is it about the lightweight ball that allows it to travel further? It is the amount of "hang time" it stays in the air. The heavy ball will be back to the ground faster than the lightweight one.

It is the same principle in rocketry. The heavier rocket is not going to coast as long as a lightweight rocket.

The difference though, is that we're not looking at the total hang-time, but the time from burnout to apogee. Why is this time important, and not the total hang-time? The reason is that it is desirable to have ejection occur right at the apogee point in the flight. This is when the rocket is traveling at its slowest speed, so it reduces the opening forces on the parachute.

The rocket motor is actually like the quarterback's arm strength. His arm imparts the same force no matter what is the weight of the ball. He can probably throw a really, really heavy ball, but it might only go a few feet. A rocket motor can probably lift a

Continued on page 3

About this Newsletter

You can subscribe to receive this e-zine FREE at the Apogee Components web site (www.ApogeeRockets.com), or by sending an e-mail to: ezine@apogeerockets.com with "SUBSCRIBE" as the subject line of the message.

Newsletter Staff

Writers: Tim Van Milligan
Layout / Cover Artist: Dave Curtis
Proofreader: Michelle Mason

Continued from page 2

DELAY TIME AND MAXIMUM LIFT-OFF WEIGHT

lot of weight upward, (as long as the thrust force is greater than the weight of the rocket). But it may be going so slow that the apogee point occurs at motor burnout time. That explains why the 0-second delay motors have the highest maximum lift-off weight.

The difference in the delay time has to do with SAFETY. Obviously, if both motors are identical in thrust, they both can push with the same force and lift the same amount of weight. But using a longer delay might lead to the rocket heading downward before the ejection charge pushes out the parachute. This is an unsafe condition, as it could lead to a chute that is stripped off and the rocket coming down in a freefall. It would be best to shorten up the delay so that it pops out the chute sooner in the flight. Hence, the shorter delay a motor has, the more weight it can SAFELY lift, because a heavy rocket gets to its apogee sooner because it doesn't coast as long.

Chart 1 shows how the Apogee Avion kit would perform if we varied the weight of the rocket. The rocket is launched straight up, with no wind using the Estes C6 motor. I used a fixed Cd of 0.5 just to make things consistent.

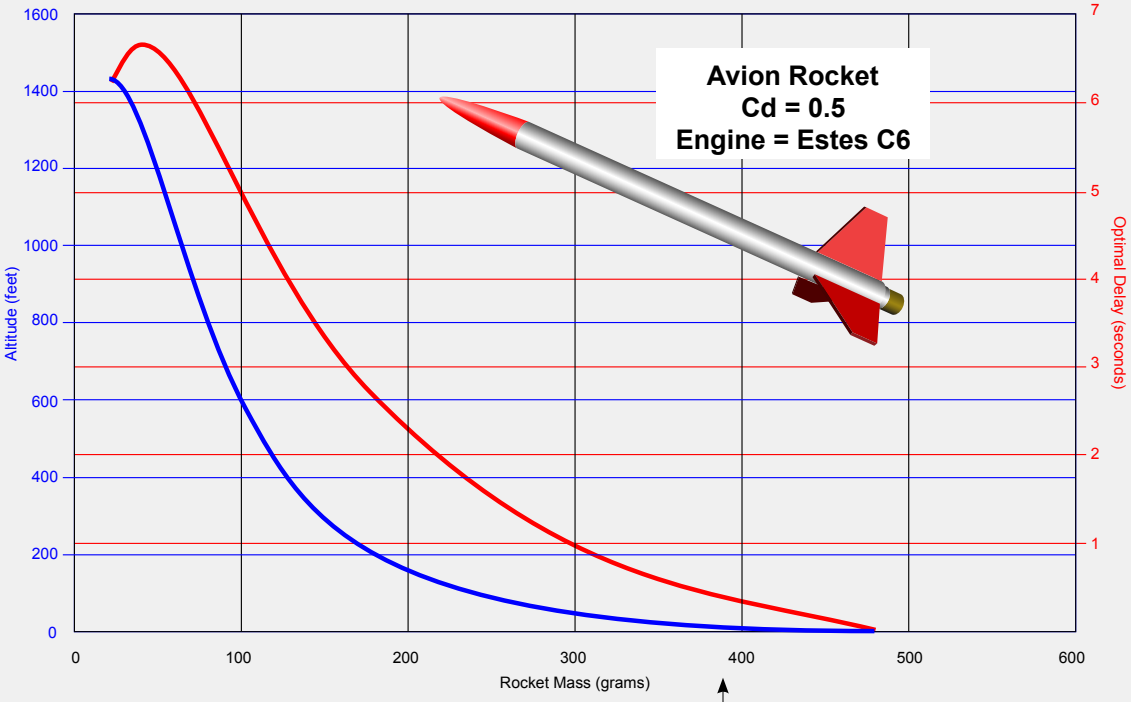

If you selected a 5 second delay (i.e., C6-5 motor), the rocket would eject right at apogee if it weighed 100 grams. If it weighed more than 100 grams, the rocket would arc over the top and would be heading downward when the parachute deployed.

If you picked a 3 second delay (a Estes C6-3 motor), the rocket could weigh about 175 grams and still eject right at apogee. It is safer to use the C6-3 if the rocket is heavier because it will eject closer to the apogee point.

It looks like the C6-3 can lift more than the C6-5. But they can actually lift the same amount. But the C6-3 is SAFER if the rocket is heavier because it will eject the chute closer to the apogee point.

Chart 1: The altitude of the Apogee Avion rocket kit decreases as the mass goes up. Also note that the optimum delay also decreases. If this rocket weighed 300 grams, you wouldn't want to use more than a 1 second delay motor.

Note that if you're using the rocket to propel a car down a horizontal track, that the maximum push-weight is going to be immense. The motor doesn't have to overcome gravity since it is going horizontal. It only has to overcome the wheel friction of the car on the track.

The point I'd like to make is that the maximum lift-off weight provided in the motor selection charts are really only applicable for a very narrow set of conditions. It is assumed that the motor is pushing a rocket straight up into the air. If it is going horizontally or if there is wind that could cause the rocket to weathercock, then everything changes and the numbers in the chart don't mean much.

Continued on page 4

Continued from page 3

DELAY TIME AND MAXIMUM LIFT-OFF WEIGHT

How do you figure out maximum lift-off weight then? You get the RockSim software and run a number of simulations to see if the rocket is going to give you a successful flight. This is pretty involved, because you must define the characteristics of a successful flight first. If you want to see how we at Apogee Components define a successful flight to determine the maximum lift-off weight, please read Finding Maximum Liftoff Weight (part 2) in Newsletter 34, which can be downloaded at: http://www.apogeerockets.com/education/downloads/newsletter34.pdf

To sum things up, the maximum lift-off weight of a motor is determined by the amount of time it takes for it coast upward to apogee. A rocket with a short delay is going to have a higher allowable lift-off weight because its delay is timed to eject the parachute sooner, which is needed on a heavier rocket.

About The Author:

Tim Van Milligan (a.k.a. “Mr. Rocket”) is a real rocket scientist who likes helping out other rocketeers. Before he started writing articles and books about rocketry, he worked on the Delta II rocket that launched satellites into orbit. He has a B.S. in Aeronautical Engineering from Embry-Riddle Aeronautical University in Daytona Beach, Florida, and has worked toward a M.S. in Space Technology from the Florida Institute of Technology in Melbourne, Florida. Currently, he is the owner of Apogee Components (http://www.apogeerockets.com) and the curator of the rocketry education web site: http://www.apogeerockets.com/education/. He is also the author of the books: “Model Rocket Design and Construction,” “69 Simple Science Fair Projects with Model Rockets: Aeronautics” and publisher of a FREE e-zine newsletter about model rockets. You can subscribe to the e-zine at the Apogee Components web site or by sending an e-mail to: ezine@apogeerockets.com with “SUBSCRIBE” as the subject line of the message.

FOR MORE ARTICLES CHECK OUT: HTTP://WWW.APOGEEROCKETS.COM/PEAK-OF-FLIGHT_INDEX.ASP

DEFINING MOMENTS

What is Optimal Delay?

Finding the right engine delay to use in a rocket can be critical to the success of the flight. If the delay is too long or too short, the rocket can eject the parachute when the rocket is moving too fast. The result is going to be a rocket that shreds the parachute, and the rest of the rocket will come down hard and could be dangerous to spectators.

The point in the flight where the rocket is traveling its slowest always occurs at apogee, the highest point in the trajectory of the rocket. By definition, the apogee point is where the rocket has zero vertical velocity. It could be going horizontal at a pretty good speed, but at the topmost part of the trajectory, it is no longer going up.

Because the speed of the rocket is lowest at apogee, it makes sense to eject a parachute at this point. The reason being that the forces trying to tear the parachute apart will be at their lowest too. So our goal when launching rockets is to try to eject right at apogee.

The optimal delay then, is the time in seconds from motor burnout to when the rocket reaches the apogee point.

Usually when you pick a small model rocket, you'll have a number of different delay choices. It is wise to pick the delay choice from those available that is closest to the optimal delay for the rocket.

It is important to note that the optimal delay can change for the same rocket. If you launch in calm wind conditions, you might find the optimal delay is pretty long. But if it is breezy, the rocket could weathercock and the rocket would then reach a new apogee point a lot sooner. In that case, you'd have to select a new delay choice from those available.

Finding the optimal delay is pretty easy if you have RockSim, but you might be confused if you do it wrong. I suggest reading the article: "The moving target called optimal delay" in Newsletter 59 at http://www.ApogeeRockets.com/education/downloads/newsletter59.pdf

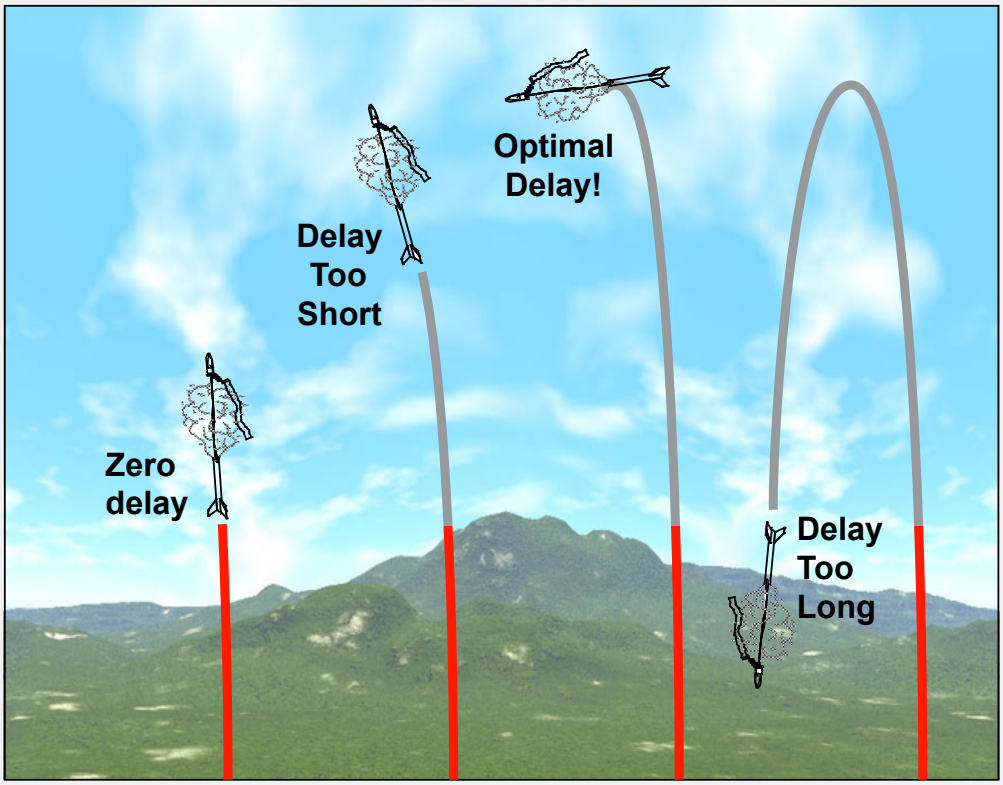

If there are two delays that are equally close to the optimal delay, which one do you choose? I'd err on the side of caution and pick the shorter delay. If the rocket decides to go horizontal, you'd want a shorter delay so the rocket doesn't shred the recovery device.

MAKING A BOATTAIL ENGINE LOCK

By Tim Van Milligan

How do you create a boattail that holds the engine in the model without an ugly engine hook?

That is a great question that I've been pondering too. So I did some research to come up with a way for scratch-builders to create something that looks good, and still holds the engine in place.

The designers at Estes came up with an engine restraint device for kits like the Astrovision and Snapshot that was built right into the boattail, as shown in the picture to the right. The device works great for holding the motor into the rocket. The drawback is that it is made from plastic, which makes it hard to imitate for the modeler that is looking to duplicate it from traditional materials like paper and balsa wood.

It is certainly possible to mold plastic resins to make a device similar to the Estes style boattail engine lock. But that is beyond the scope of this article. If you are interested in working with plastic resins to mold parts, you can read Apogee Component's Technical Publication #12, "Making Cast Parts With Silicone Rubber Molds." It can be found at: http://www.apogeerockets.com/technical_publications.asp.

In this section you'll find the step-by-step instructions for making a twist-to-lock boattail engine restraint using common rocketry materials like paper centering rings and body tubes.

The best type of rockets to use this method on are those that have a relatively short boattail. The weakest part of the design is the strength of the wedge. If it should happen to break, then the engine is going to shoot out rearward at ejection. Because of this, this method of engine restraint should be limited to rockets with 1/4A to D size engines.

Another drawback of the method is that the fins can't extend as one piece across the joint between the tube and the fins, as shown in the picture to the top right. If they did, the boattail could not be removed from the rocket. But this plan can be used in many cool designs. Give it a try.

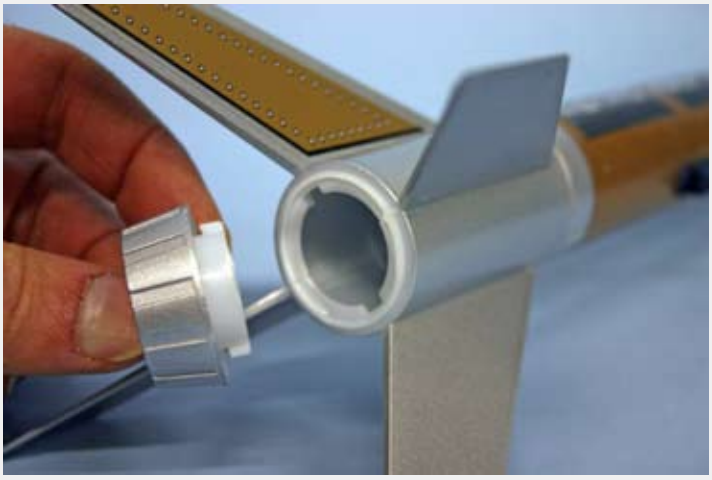

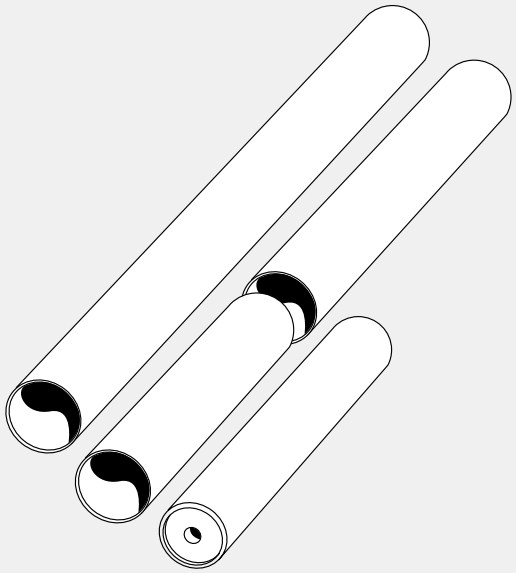

1. Cut the engine tube about twice as long as the length of the rocket engine.

2. Cut this engine tube into two parts. The shorter part should be about 3/4 the length of the rocket engine. This short part will be the aft section.

Continued on page 7

Continued from page 6

MAKING A BOATTAIL ENGINE LOCK

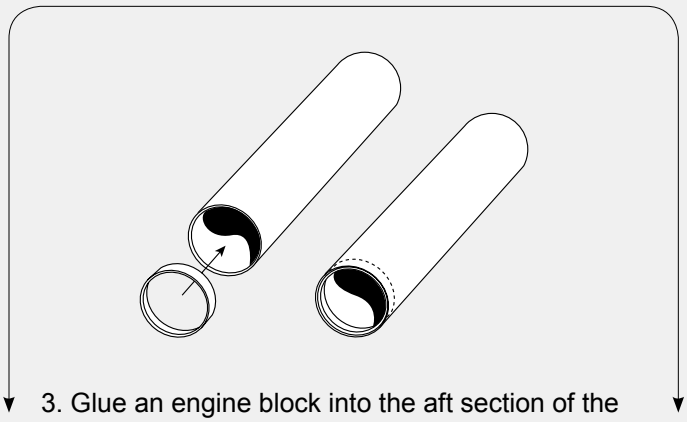

3. Glue an engine block into the aft section of the engine tube flush with the end.

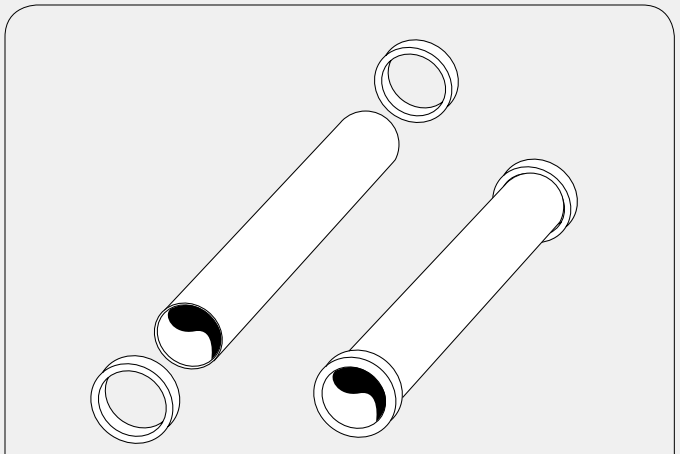

4. While the glue is drying on the engine block, glue two centering rings on the long portion of the engine mount tube. They should be at the front and the back edges of the tube.

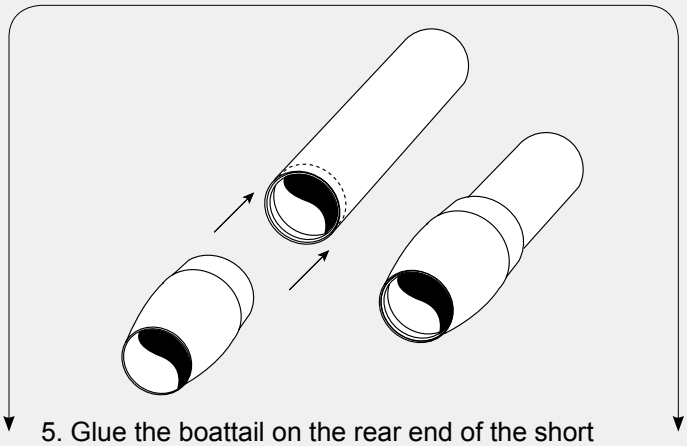

5. Glue the boattail on the rear end of the short section of the engine mount tube. The rear end is the side with the engine block installed.

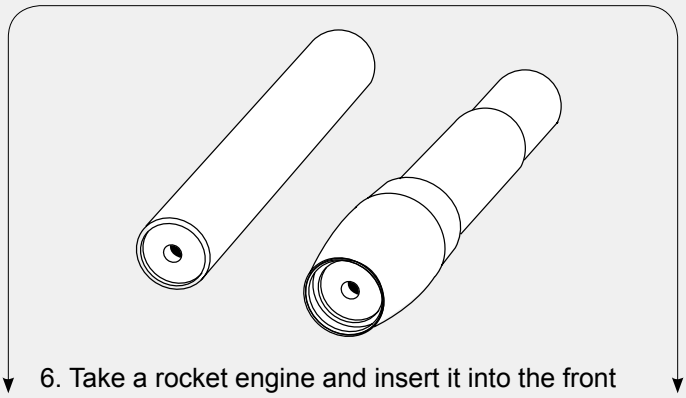

6. Take a rocket engine and insert it into the front end of the engine mount (the short section with the boattail glued on it). The engine will stick out the front end of the engine tube.

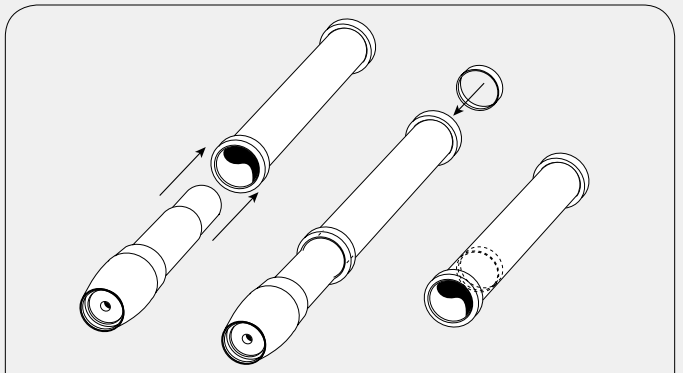

7. Insert the exposed portion of the rocket engine into one end of the long engine mount tube. Take a second engine block and glue it into the long engine mount tube, so it just touches the front part of the rocket motor. The motor should not rattle inside the tubes when they are put together. Once in position, pull the assembly apart, and remove the engine so it doesn't accidentally get glue inside the engine tube. Allow the glue to dry.

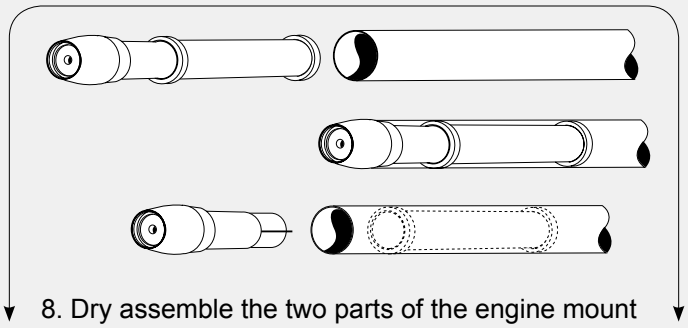

8. Dry assemble the two parts of the engine mount tube again after the glue has dried. Slide the assembly into the tube on the aft end of your rocket. Note how deep the long section of the engine tube must be inserted into the rocket tube. Pull the assembly out, and then glue the long section of the engine tube into the rocket.

Continued on page 8

Continued from page 7

MAKING A BOATTAIL ENGINE LOCK

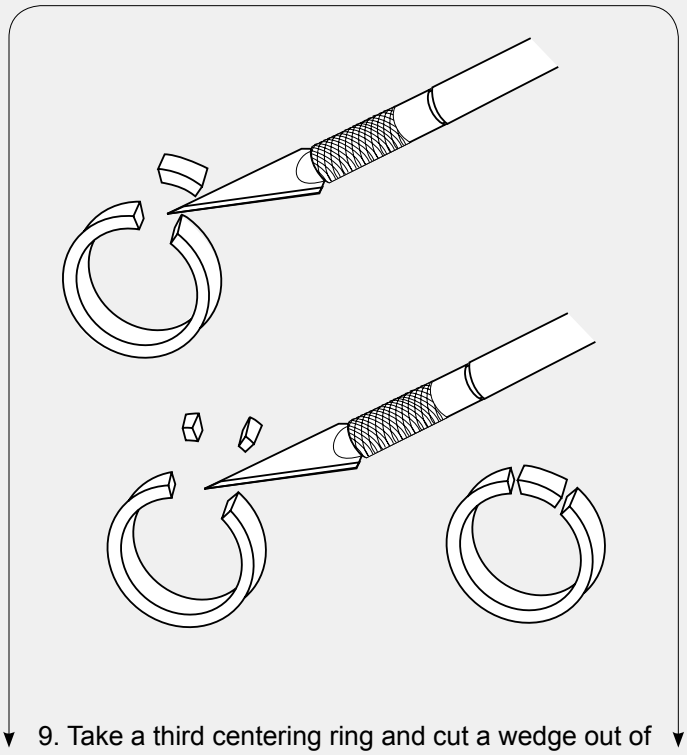

9. Take a third centering ring and cut a wedge out of it using a hobby knife. Once the wedge is removed from the ring, trim it down a little narrower so that if it is placed back into the ring, there will be a slight gap in the ring.

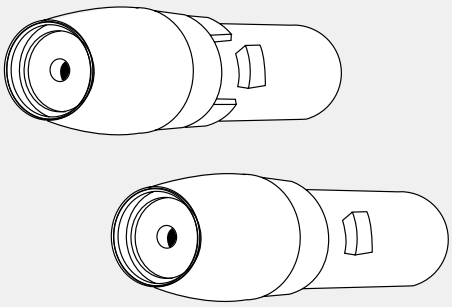

10. Temporarily slide the “C”-section of the ring onto the front end of the short length of engine mount tube. Take the “wedge piece” that was removed from the ring, and position it against the “C”-section. Make sure that it isn’t too tight up against the front edge of the c-section, or it will be difficult to lock the engine mount as you prep the rocket for flight. When you have it positioned properly, glue the wedge into place. Remove the “C”-section of the ring so that it doesn’t accidentally get glued to the engine mount tube.

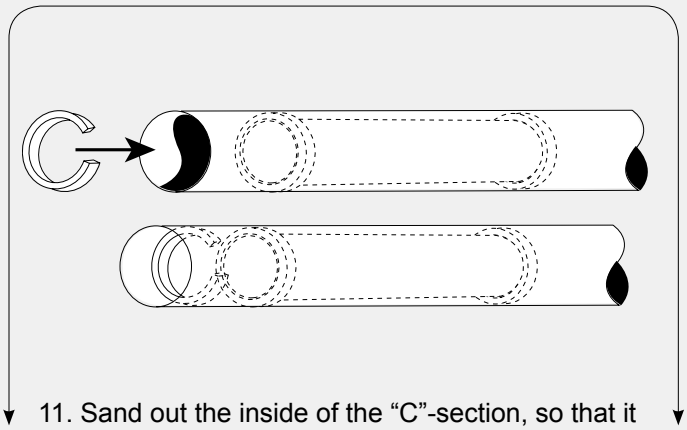

11. Sand out the inside of the “C”-section, so that it easily slips over the engine mount tube with out binding. The “C”-section is glued inside the aft end of the rocket. The depth that it is inserted is equal to the length of the shoulder on the boattail. Remove any excess glue that might ooze out from under the ring as you glue it into the tube, or it will be hard to insert and twist the boattail to lock in place.

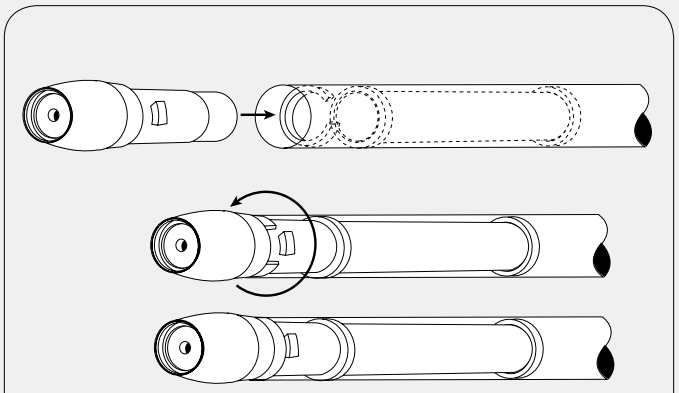

12. Insert the engine in the aft portion of the mount, and then insert this into the front section of the rocket. You’ll need to insert the wedge through the cutout on the ring glued into the front section. Then give it 1/2 twist to lock the boattail in place.

KIT OF THE MONTH

DynaStar Firefox-SHX

This rocket kit has a shape reminiscent of a Soviet-era fighter jet. The inspiration actually came from the 1982 movie starring Clint Eastwood called “FIREFOX.” The model is meant to look like a mean and stealthy fighter jet.

The unique trait of this rocket is the offset body tube. Even though the nose is not on the same centerline as the engine tube, the rocket is robust enough that it flies straight and true on D, E and F size rocket engines.

The Dynastar FireFox-SHX kit was designed by Shrox, who creates some unique designs that can be built using traditional rocket materials. Shrox has always attempted to make kits that don’t need a lot of specialty parts. He likes things that can be easily scaled up or down, so modelers can make several different versions of the same kit.

This is a simple-to-build rocket that uses traditional model rocket construction techniqes that you may be familiar with from building smaller models.

The bigger parts actually makes it easier to build this model than a smaller rocket, because the parts are easier to grasp.

Another feature of this kit is that the rocket has a low mass compared to it’s internal volume. That is possible due to the lightweight nose cone and balsawood fins. You’ll be able to fly this rocket to approximatly 340 feet using the inexpensive D12-3 rocket engine. With composite motors, this rocket can easily go over 1000 feet into the sky!

Big Performance on Mid-Power Motors

Like the other kits from “DynaStar Mid-Power Rockets”, the FireFox-SHX is designed to fly on the less expensive “D” size black-powder rocket motors. And it will give you the same performance as other mid-power kits that require “E” and “F” size composite propellant rocket motors. The lighter weight rocket allow the rocket to fly faster and higher.

Kit Features

- Offset Body Tubes Create An Air-Scoop Appearance
- Plastic Nose Cone
- Colorful Pressure-Sensitive Decals
- Laser-Cut Balsa Wood Fins
- Large 1/4 inch Launch Lug
- Premium Quality Body Tubes
- Large 32” Diameter Plastic Parachute
- Die-Cut Cardstock Centering Rings and Bulkheads
- Kevlar® Shock Cord
- Spring-Steel Engine Retainer Clips

For more detailed information go to:
http://www.ApogeeRockets.com/firefox.asp

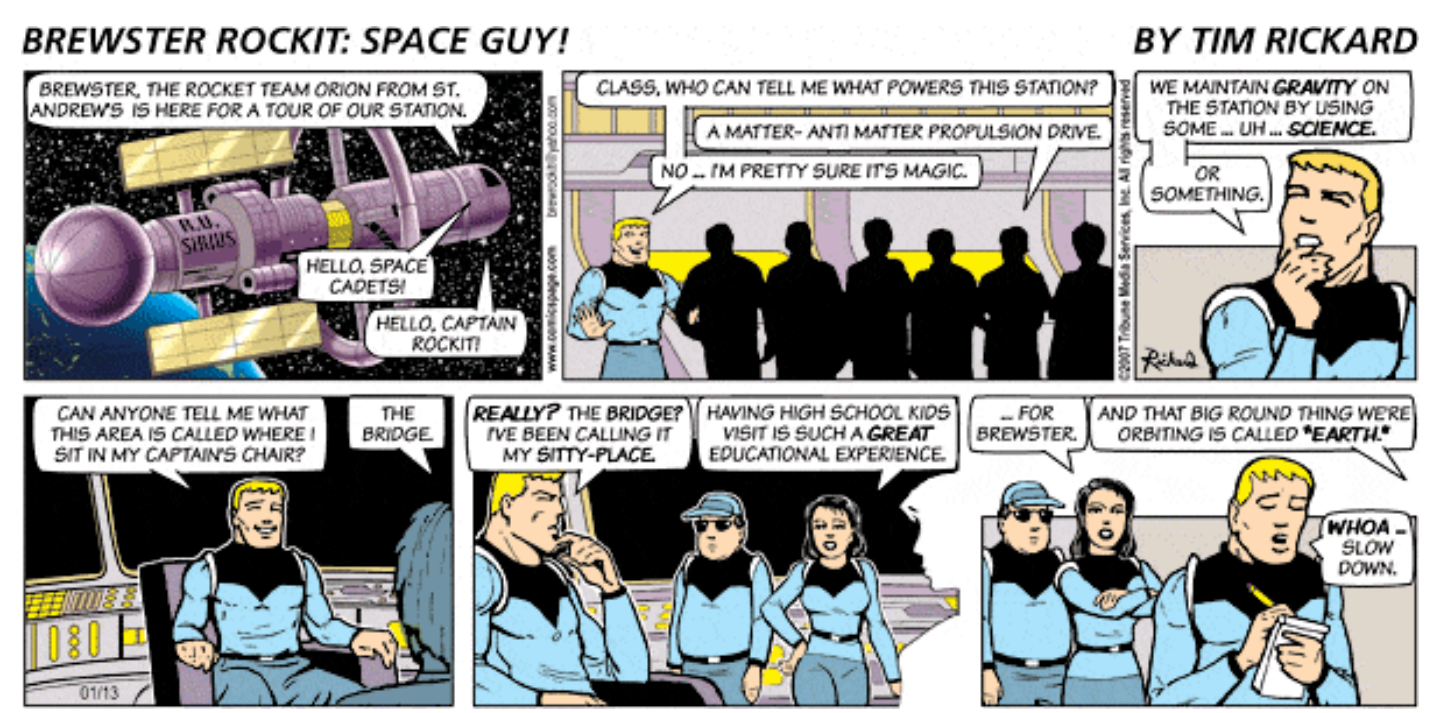

This comic was sent to us from Len, a member of the TARC team in the comic. This was printed in the Chicago Tribune.