Apogee Components

PEAK OF FLIGHT

NEWSLETTER

Building A Hookless Boattail Rocket

How to secure a motor in a rocket that has a boattail, without an ugly engine hook

Apogee News

The Space Foundation's Teacher Liaison Program

Web Site Worth Visiting

ThrustCurve.org

Kit of The Month

The Apogee Avion

A Rip-Roar Launches. Get this rocket at: www.ApogeeRockets.com/Rip-Roar.asp

3355 Filmore Ridge Heights
Colorado Springs, Colorado 80907-9024 USA
www.ApogeeRockets.com e-mail: orders@apogeerockets.com
Phone: 719-535-9335 Fax: 719-534-9050

ISSUE 203 FEBRUARY 26, 2002

PEAK OF FLIGHT

Building a Hookless Boattail Rocket

By Tim Van Milligan

In *Peak-of-Flight Newsletter* #201, (www.ApogeeRockets.com/education/downloads/Newsletter201.pdf) I presented to you a method of making a boattail engine lock. It combined the drag-reducing qualities of a boattail with a way to lock the engine in place without an engine hook.

The first downside of the boattail engine lock configuration is that it is limited to relatively short boattails. If the boattail is longer than the rocket engine, it gets difficult to physically construct, because the motor is an integral part of the design.

Also, the configuration limits the design of the rocket. How? The fins cannot extend down the boattail. They had to stop just in front of the boattail so it could be removed to allow the rocket to be installed/removed. While this is OK for most rockets, I hate to have limitations to a rocket's aesthetics.

The other downside of the boattail engine lock configuration is that it is only good for small rockets. I suppose it is possible to make one for high-power rockets out of metal, but that gets pretty complicated and expensive. Wouldn't it be nice to have something that could be cheap to use on bigger models?

In this issue, I'd like to present another alternative for rockets that have a boattail but one that removes the limitations of the boattail engine lock. I don't have a good name to call it, so lets call it a "mid-body motor insertion boattail rocket."

As the name says, we're going to insert the motor into the rocket at the midbody point. That's right, you're going to put the motor in from the front of the motor mount, instead of the back end. This is not something new, as we've showed something similar in *Peak-of-Flight Newsletter* #97 (www.ApogeeRockets.com/education/downloads/Newsletter97.pdf) five years ago.

The only difference from Newsletter #97 is that this rocket is not a minimum diameter vehicle. The motor is sufficiently smaller in diameter than the main body of the rocket, so the boattail is really going to be effective at reducing the drag of the rocket.

The first part in the construction of the mid-body motor insertion-boattail rocket, is to make the boattail itself. What you'll see in the drawings is a balsawood boattail, but you can easily make a paper shroud boattail that will work just as well. If you need instructions on making cardstock transitions, see the book *Model Rocket Design and Construction* (www.apogeerockets.com/design_book.asp), or Peak of Flight Newsletter #136 (www.ApogeeRockets.com/education/downloads/Newsletter136.pdf).

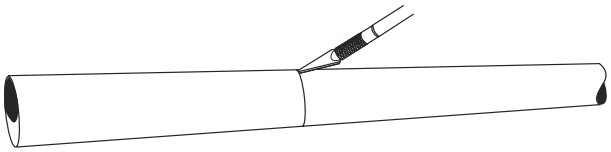

1. After making the boattail, decide where on the rocket's tube you can have the rocket split in two. The location will determine how long of an engine spacer you'll need.

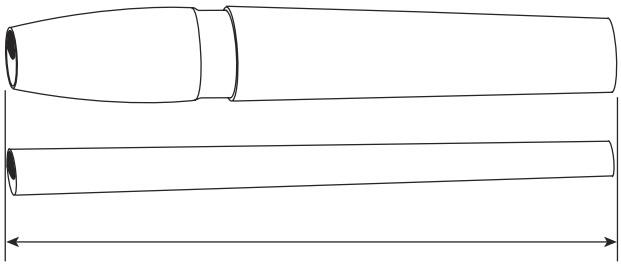

2. Cut the engine mount tube to length. It will be approximately the entire length of the boattail (shoulder included) plus the length of the "aft" portion of the main body tube.

Continued on page 3

About this Newsletter

You can subscribe to receive this e-zine FREE at the Apogee Components web site (www.ApogeeRockets.com), or by sending an e-mail to: ezine@apogeeRockets.com with "SUBSCRIBE" as the subject line of the message.

Newsletter Staff

Writers: Tim Van Milligan
Layout / Cover Artist: Tim Van Milligan
Proofreader: Michelle Mason

Continued from page 2

Building a Hookless Boattail Rocket

3. Glue an engine block into one end of the engine mount tube. This will be the aft end of the rocket.

4. Glue the engine mount tube into the boattail.

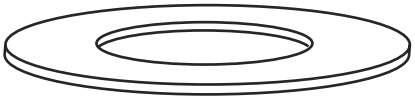

5. If the engine mount tube is fairly long, you will need to make a disk-type centering ring for the forward end. This will make sure the engine tube stays concentrically aligned in the main body tube.

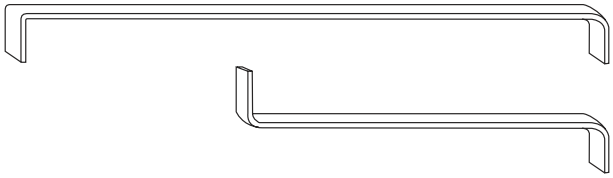

6. Locate an engine hook. With plyers, bend the hook so that one end is bent upwards instead of downwards. Trim off the excess with a wire cutter if it sticks out too high.

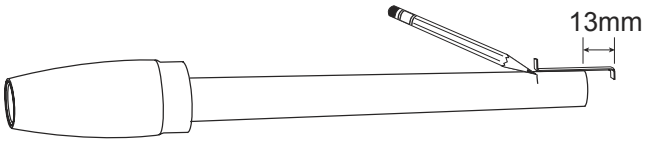

7. Position the engine hook along the front end of the engine mount tube. The hook should extend approximately 13mm (0.5 inch) off the forward end of the tube. Mark the location when the back end of the hook stops along the tube.

Continued on page 4

SUNWARD AEROSPACE GROUP LIMITED

Available Online & Worldwide through Quality Hobby Shops & Online Retailers

Trust Sunward for a complete line of Model Rocket Kits and Parts including: Tubes, Baffles, Connectors, Mounting Kits, Balsa & Plastic Nose Cones, Nylon Parachutes, and NOMEX flame resistant blankets and shock cord protectors.

Browse online our large lineup of BT50, BT56, BT60, and BT70 based Model Rockets Kits.

www.sunward1.com info@sunward1.com

Direct 416-953-1847 fax 416-245-7985

Continued from page 3

Building a Hookless Boattail Rocket

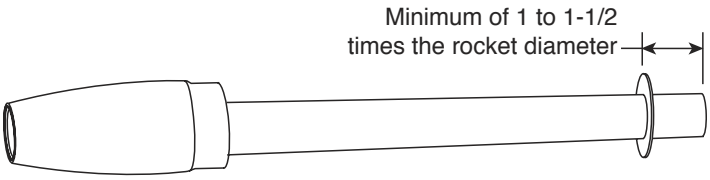

8. Glue one centering over the tube at the pencil mark. If you made a disk-type centering ring, this is the ring you should use. The ring should be far enough back on the tube so it won't interfere with a tube coupler that is needed to connect the rocket sections together.

9. Slide a thick centering ring over the engine hook and onto the tube. Glue it so that the "up" bend of the engine hook butts against the first ring glued onto the tube, and the second centering ring prevents it from sliding forward.

10. Glue a second ring over the engine hook, approximately 13mm (0.5 in.) from the front of the engine mount tube. It is a good idea to attach your Kevlar shock cord to this ring.

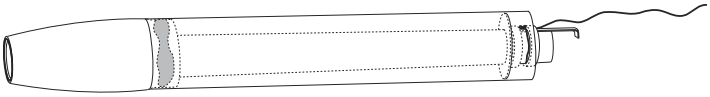

11. Slide and glue the aft-portion of the main body tube over the front end of the engine mount tube and onto the shoulder of the boattail. Put a fillet of glue on the front edge of the large disk-type centering ring where it meets the inside wall of the large body tube.

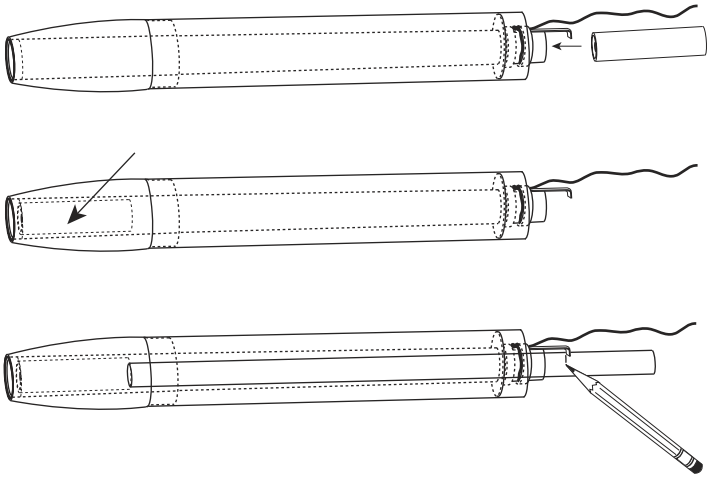

12. Drop a rocket engine into the front of the engine mount tube. With a dowel or skinny tube, measure how long a spacer-tube you'll need to hold the motor in the correct location. The length is measured from the top edge of the engine, to the inside edge of the part of the engine hook that protrudes off the front end of the engine mount tube.

Continued on page 5

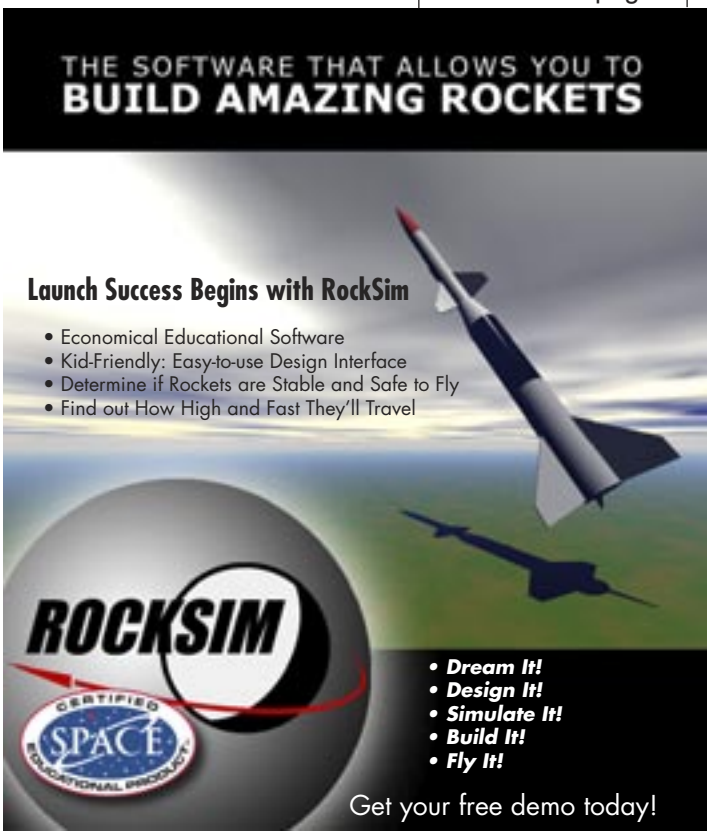

Continued from page 4

Building a Hookless Boattail Rocket

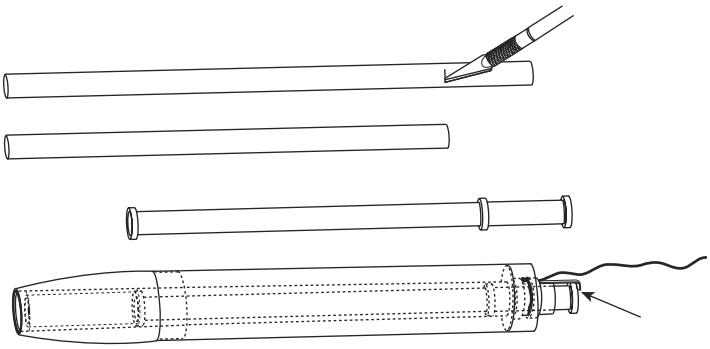

13. Cut the engine spacer tube to length. If the spacer tube is significantly smaller than the diameter of the engine mount tube, use three centering rings to make sure it doesn't move around inside the tube. One ring should be glued flush with each end of the tube. The third ring is glued near the front of the tube, but deep enough down that it will be inside the engine mount tube to prevent it from wobbling around. When inserted, the top ring should be just inside the edge of the engine hook.

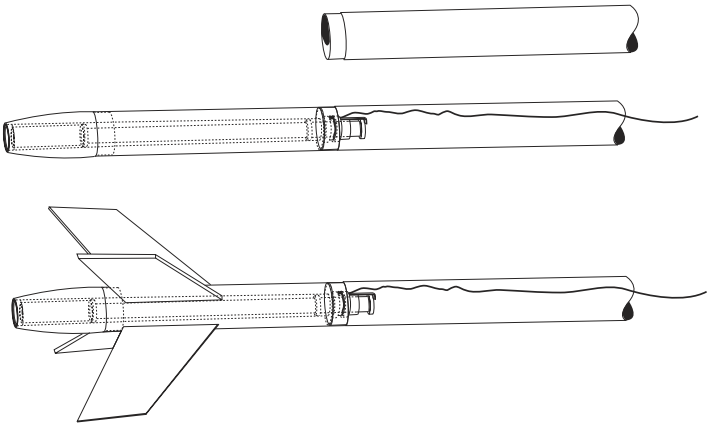

14. A tube coupler can be added to either the front of the engine mount section, or the back end of the upper portion of the rocket. I prefer to put it on the back of the forward tube. In either case, make sure you can bend the engine hook enough so that you can insert the engine and the spacer tube into the rocket.

This is a mid-body separation rocket, so it does require some extra care when prepping for flight. The nose cone is actually glued onto the front end of the forward tube. Because of this, the parachute is not blown out of the rocket tube. The ejection charge is going to try to pack the chute tighthter into the front tube. You must prep the rocket in such a way that the parachute is pulled out at ejection instead of being blown out. I would tie a loop in the shock chord near the point where it attaches to the engine mount tube. This way, as the shock cord begins to stretch out at deployment, the parachute gets pulled out quickly.

I'd also recommend that you wrap the chute loosely with recovery wadding to give it extra protection from the ejection charge. In order for it to be pulled out quickly, it will have to be near the end of the engine mount tube, therefore it is going to be hit with a lot of heat.

About The Author:

Tim Van Milligan (a.k.a. "Mr. Rocket") is a real rocket scientist who likes helping out other rocketeers. Before he started writing articles and books about rocketry, he worked on the Delta II rocket that launched satellites into orbit. He has a B.S. in Aeronautical Engineering from Embry-Riddle Aeronautical University in Daytona Beach, Florida, and has worked toward a M.S. in Space Technology from the Florida Institute of Technology in Melbourne, Florida. Currently, he is the owner of Apogee Components (http://www.apogeerockets.com) and the curator of the rocketry education web site: http://www.apogeerockets.com/education/. He is also the author of the books: *"Model Rocket Design and Construction," "69 Simple Science Fair Projects with Model Rockets: Aeronautics"* and publisher of a FREE e-zine newsletter about model rockets. You can subscribe to the e-zine at the Apogee Components web site or by sending an e-mail to: ezine@apogeerockets.com with "SUBSCRIBE" as the subject line of the message.

Advertising NEVER Works...

if you never use it.

If you want more rocketry customers and don't have a big advertising budget, then the *Peak-of-Flight Newsletter* is an answer to your prayers. Reach nearly 14,000 modelers - NOW - when you need it most. *I use it, and so should you!*

For more details and our bargain rates visit:

http://www.ApogeeRockets.com/newsletter_advertising.asp

Apogee News

Teachers: Get Involved With the Space Foundation Teacher Liaison Program

By Tim Van Milligan

This past week, I had the privilege of serving on a special committee at the Space Foundation that was charged with selecting teachers for their Teacher Liaison program. I was not familiar with this program until they contacted me to see if I could help. But the more I found out about it, the more I became really impressed, and I thought I'd pass along information about it in this newsletter. If you're a teacher, you might want to consider getting involved with it next year when they accept applications again.

Space Foundation Teacher Liaisons serve as an active link between the Space Foundation, NASA, and their school and school district. They get numerous benefits, including free registration to the National Space Symposium (a $1,275 value!), specialized training and instruction at Space Foundation and NASA workshops with optional graduate-level credit, exclusive science, technology, engineering, and math (STEM) professional development experiences with optional continuing education credit, and a special "flight jacket."

Teacher Liaisons are also the testers for space-oriented curriculum created by the Space Foundation and organizations that they work with (like NASA). I've heard that they also are able to arrange some behind-the-scenes tours of NASA facilities, and a few of them were able to get flights in the zero-g airplane used by NASA.

My role in the process was as an industry representative. As a selection team, we were asked to review the applications and select those that we thought would do the best. We were looking for teachers that wanted to teach space education and inspire students to careers in science related careers. I have to say that it wasn't too hard, because the applicant pool was pretty hard-core space enthusiasts.

The people who really stood out were the ones that had already had some experience teaching space studies. I have to say that model rocketry is one subject that really stood out. If you are interested in becoming a Teacher Liaison, contact the Space Foundation. Their web site is www.SpaceFoundation.org.

Web Site Worth Visiting

Get Your Rocket Engine Files at ThrustCurve.org

By Tim Van Milligan

John Coker is an unsung hero of rocketry. His web site www.thrustcurve.org serves a great need for all modelers that want to design and fly ambitious rocket projects.

Basically, the web site is a database of information on all certified rocket motors (from NAR, Tripoli, and CAR). It lists all pertinent information about each rocket motor, such as total impulse, burn time, weight, and when it was certified. From this information, you can use it to select the correct motor for your rocket. Also included is an engine data file that can be used to run your RockSim simulations. If you're doing a really complex project, this is a necessity.

You're probably thinking that RockSim already contains a huge database of engine files. And you're right. But you wouldn't believe how many new engines are being released by the various manufacturers. As soon as we create a new engine database, it becomes out of date.

To be honest, it is a huge chore to even try to keep the engine database up to date. I'm not on any type of email list from the manufacturers to let me know when a new motor is released. I only find out when a RockSim customer contacts me looking for a particular engine file that isn't in the database. I'm eternally thankful that John Coker is making the attempt to keep up with the engine certifications, as it takes a load off my shoulders. I'd much rather concentrate on adding new features to RockSim than trying to keep the engine files up to date. Isn't that what you'd like too?

Last week, John did a major update of over 161 new engine files. It filled in a lot of the holes of missing engine files, and if you're a RockSim user, I'm sure you'll benefit from his efforts. Please check his web site first before you send me an email looking for a particular engine file.

John's site still has a number of missing engine data files. Check and see if you can provide him with any of the missing engine files. I've put a couple of video tutorials on the Apogee web site that show how easy it is to make engine files that you can send to him. You'll find them at: www.ApogeeRockets.com/RockSim_tutorials.asp

The www.ThrustCurve.org web site is worth visiting. Check it out today and send him a note of thanks!

The home page of ThrustCurve.org

KIT OF THE MONTH

Apogee Avion

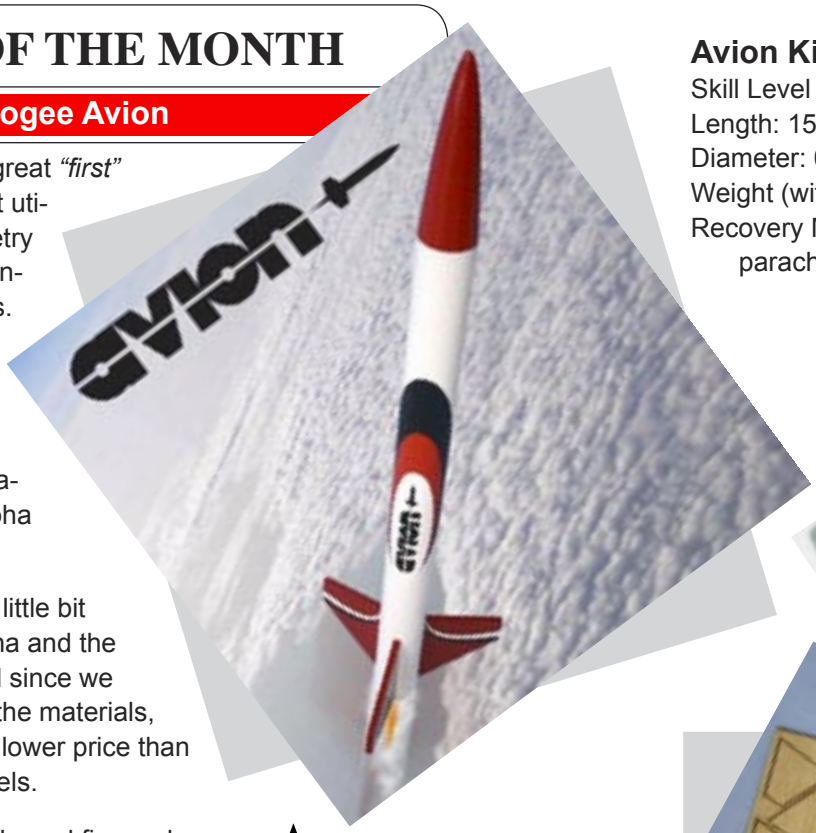

The Avion is a great *"first"* rocket kit because it utilizes common rocketry parts and simple construction techniques. It is perfect for schools and youth groups that are looking for a good-looking alternative to the Estes Alpha kit.

This rocket is a little bit bigger than the Alpha and the Quest Astra kit. And since we control the price of the materials, we can offer it for a lower price than either of those models.

The trapezoid shaped fins make this a great performing rocket. It can easily go over 1000 feet in the air on a C6-5 rocket motor.

The Apogee Avion is a great first rocket for beginners because it has so many features that make it easy-to-build. This includes laser-cut tubes and die-cut decals to give it a great finish.

You'll love this kit if you have a young modeler in your family, or if you are a teacher. It has all the classic parts of a traditional model rocket, like the balsa wood fins add, but is easier to assemble. And it actually teaches assembly techniques, so your child will have to follow directions like the classic rocket kits that you grew up with.

Don't worry though, assembly is very easy! Check the Apogee web site for video instructions on building this rocket kit.

Avion Kit Specifications:

Skill Level 1: Easy to Construct and Fly
Length: 15.0" (38.1 cm)
Diameter: 0.976" (24 mm)
Weight (without motor): 1.25 oz (35.5 gm)
Recovery Method: 10" (25.4 cm) plastic parachute

Kit Features

- Plastic Nose cone
- Laser-cut Balsa Fins
- Colorful decals (die cut)
- Metal Engine Clip
- Kevlar® Shock Cord
- 10" Diameter Plastic Parachute
- Premium Quality Body Tubes
- Flies over 1000 feet on Estes C6-5 motors

For more detailed information, go to:
http://www.ApogeeRockets.com/Avion.asp