Apogee Components

PEAK OF FLIGHT

NEWSLETTER

In This Issue

Make Your Own Pyrotechnic Bolts

Cover Photo:
Quest Lil' Grunt rocket kit. Get yours at:
www.ApogeeRockets.com/Quest_Lil-Grunt.asp

Apogee Components, Inc. — Your Source For Rocket Supplies That Will Take You To The "Peak-of-Flight"
3355 Fillmore Ridge Heights
Colorado Springs, Colorado 80907-9024 USA
www.ApogeeRockets.com e-mail: orders@apogeerockets.com

ISSUE 266 AUGUST 10, 2010

Make Your Own Pytrotechnic Bolts

By Marc Stevens, TRA Level 2 Certified

{Editor's Note: Since this device uses black-powder, it is not suitable for modelers under the age of 18. Always use care when handling black powder}

As a kid, I remember watching the Apollo launches on TV and being amazed by the in-flight footage of the rockets, especially when one stage broke free of the other and slowly tumbled away into the distance. I thought it was pretty cool how one moment these two hulking pieces of metal were firmly connected together and then after a brief flash they were just as surely disconnected and traveling in opposite directions.

I've since learned that that little piece of disconnection magic was accomplished by something called "pyrotechnic bolts." These bolts firmly hold two items together one moment and then release them the next with a bang ... literally! The bolts are designed with a small internal pyrotechnic charge that when electrically triggered will explode and instantly break the bolt, and in so doing, the connection between the two items they hold together.

So what I was seeing as a kid in that famous Apollo 4 staging footage was a small army of these bolts simultaneously exploding and effectively disconnecting one rocket stage from another. If you watch that footage carefully, you can see a ring of lights appear in the darkness as the bolts explode out of their holes. A moment later, the second stage ignites and cleanly pulls away from the former stage one.

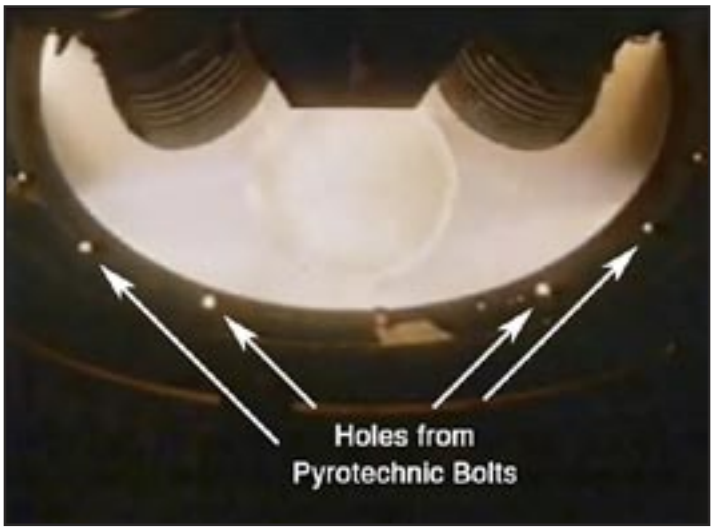

Photo 1: Space rockets use pyrotechnic bolts to hold the multiple stages together securely.

Many, many years have passed since I watched that amazing footage on TV. In those years I've developed a love for model rocketry, and more recently an unquenchable passion for high-power rocketry. During that time, I have frequently found myself wishing that I could figure out a way to disconnect two parts of a rocket as quickly and effectively as NASA did with their pyrotechnic bolts. Alas, safety considerations and a lack of an appropriate project kept me from ever addressing my desire with any level of conviction.

Then along came my *"Rockets for Schools"* and NASA SLI (Student Launch Initiative) team. These teens had the uncanny ability to come up with rocket plans that gave me justifiable reasons to attempt all of the crazy design stuff I'd always wanted to try. In this case, it was Black Sabot, a *Rockets for Schools* special project, which would inevitably force (allow?) me to develop a viable design for pyrotechnic bolts. In their design, Black Sabot, a pyramid-shaped rocket (Photo 2), would launch from the ground and fly to a few hundred feet. Shortly after motor burnout, Black Sabot would split wide open (like an artillery sabot) and release Li'l Ozzy, the rocket destined for stage two of the flight.

Photo 2: The Black Sabot rocket splits in half to launch an internal rocket.

The challenge of this design was how to firmly hold

Continued on page 3

About this Newsletter

You can subscribe to receive this e-zine FREE at the Apogee Components web site (www.ApogeeRockets.com), or by sending an e-mail to: ezine@apogeeRockets.com with "SUBSCRIBE" as the subject line of the message.

Newsletter Staff

Writer: Tim Van Milligan
Layout / Cover Artist: Tim Van Milligan
Proofreader: Michelle Mason

Continued from page 2

Make Your Own Pyrotechnic Bolts

both halves of Black Sabot together during the stresses of launch, yet have it surely and instantly split wide open to allow for the clean release and launch of Li'l Ozzy. The solution? A pyrotechnic bolt, of course!

In their design, a clasp mechanism would hold the bottom of the rocket firmly together like the hinge of a clamshell. The top of the pyramid-shaped shell would then be held together by a lone pyrotechnic bolt that pierced both halves of the airframe about 6" from the tip. To ensure a positive release when the bolt split, a spring surrounded the bolt and was compressed between the halves of the rocket. When the bolt split, the spring would instantly push the airframe apart and open the scoop-shaped airframe to the rushing wind - which would ultimately finish the job of opening it.

I quickly realized that the design we would ultimately come up with for this pyrotechnic bolt would have multiple applications in high-power rocketry. I found myself imagining all sorts of uses; everything from securing strap-on boosters and multiple inline stages to air-released payloads and recovery vehicles. The possibilities are endless! This realization, more than any other, made us commit to designing a pyrotechnic bolt with these basic design parameters:

1. It must be safe to build and use.
2. It must be easy to install and implement into typical rocket designs.
3. It must be cheap since each one would be essentially destroyed upon use.
4. The materials would have to be readily available.
5. It'd have to be easy to manufacture.

What we came up with was a design that meets all of these parameters. It's relatively safe since it uses almost no metal and only a small amount of black powder. It only requires a hole to install and can easily be integrated into existing designs and using common electronics. Cost would be only a few bucks each and the materials are available from Apogee Components and any hardware store. And finally, manufacturing each one is a breeze. They can literally be built in a matter of a few minutes each once all of the materials are prepared.

In short, the bolt consists of a standard nylon toilet seat bolt that is drilled out to make an internal cavity for black powder and scored with a hacksaw at the point where you want it to break apart. The cavity is filled with a small amount of black powder, and a standard Quest Q2G2 igniter (www.ApogeeRockets.com/igniters.asp) is inserted. A plug of plumber's epoxy putty is inserted into the hole and a small pin is inserted to retain that epoxy plug. When current is applied to the igniter, it ignites the black powder and the bolt is split apart by the force of the small blast.

Preparation

The materials needed to manufacture these can all be found with one stop to apogeerockets.com and another to a decent hardware store with a gun department. Here's

Continued on page 4

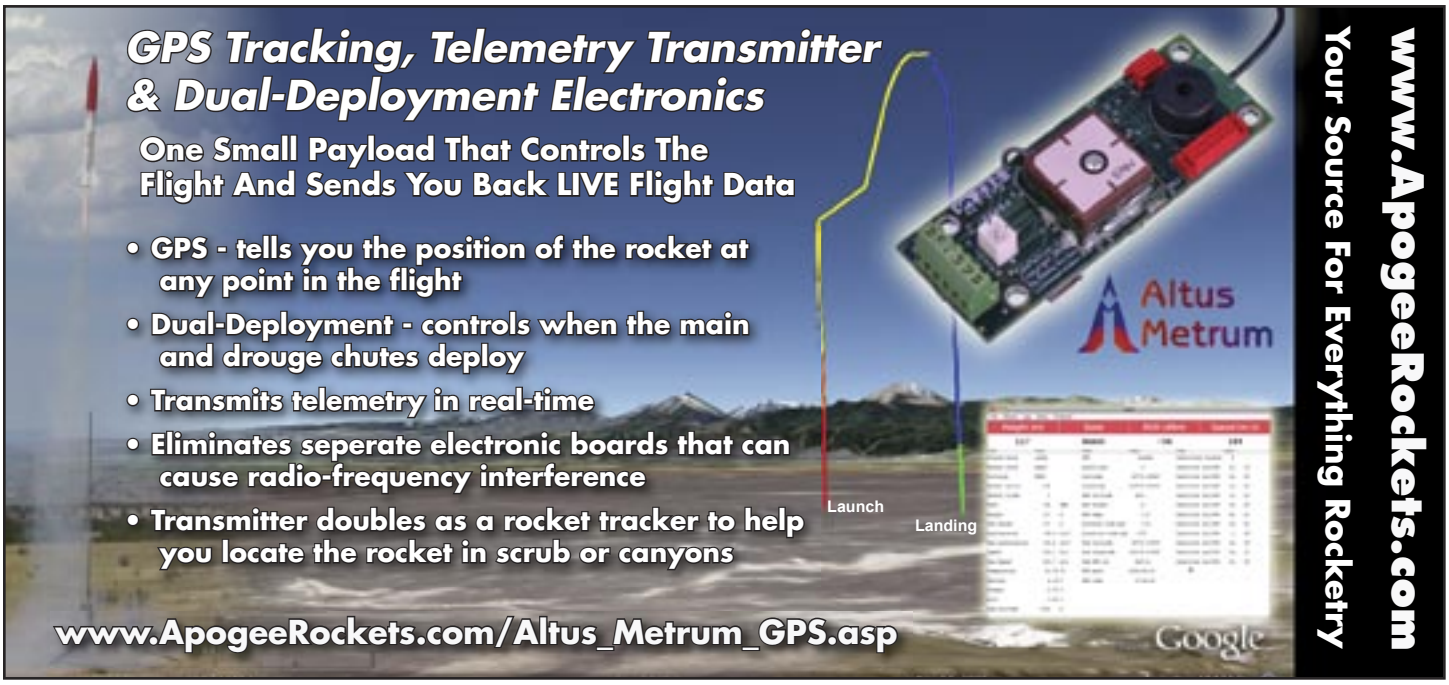

Continued from page 3

Make Your Own Pyrotechnic Bolts

everything you'll need:

Materials

- Nylon toilet seat nut and bolt
- Black powder
- Plumber's epoxy putty
- 1/16" brad, nail or pin
- Quest Q2G2 igniter (from Apogee Rockets, of course! www.ApogeeRockets.com/igniters.asp)

Tools Needed

- Safety glasses
- Rubber gloves
- Vise
- Electric drill
- 1/8" drill bit
- 1/16" drill bit
- Hacksaw
- Wire cutters

Photo 3: Parts needed to make a pyro bolt.

Manufacturing

Step 1 - Put on your safety glasses. Clamp the nylon bolt vertically into a vise with the head of the bolt up. Using the 1/8" drill bit, drill down into the middle of the bolt until you have opened a hole into its hollow center.

Photo 4: Drill a hole into the shaft of the nylon bolt.

Step 2 - Turn the bolt 90° in the vise and drill a 1/16" hole completely through the shaft of the bolt right below the head.

Step 3 - Return the bolt to vertical in the vise with the head up. Using the hacksaw, score a 1/32" deep saw kerf around the circumference of the bolt's shaft at the point where you want it to separate. Do not cut into the center cavity at any point.

Step 4 - Fill the cavity of the bolt about three-quarters

Continued on page 5

Altimeter One *"The one altimeter you'll use in every rocket you fly."*

Finally... A simple to use device that "shows" you how high your rocket went.

- Records peak altitude up to 29,000 feet (ASL)
- Rechargable battery. Just plug it into a USB port on your computer to recharge.
- Small size: Fits easily in a 18mm diameter tube, and weighs only 7 grams.
- Rock-solid design. No need to protect it by putting it in a separate payload bay. Just clip it to the nose cone or shock cord.
- Easy-to-read LCD display. No need to count beeps or flashes of light.

Quarter shown for size comparison

www.ApogeeRockets.com/AltimeterOne.asp

www.ApogeeRockets.com
Your Source For Everything Rocketry

Continued from page 4

Make Your Own Pyrotechnic Bolts

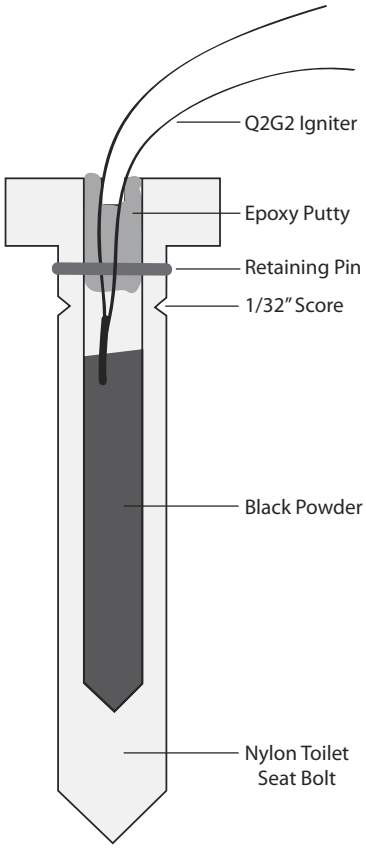

Figure 1: Drawing of the pyrotechnic bolt.

full of black powder and insert the head of the Quest Q2G2 igniter into the cavity until it comes into contact with the black powder.

Step 5 - Put on your rubber gloves and mix a pea-sized amount of plumber's putty (the Fix-It Epoxy Clay will work just as well: www.ApogeeRockets.com/epoxy-clay.asp). Plug the 1/8" hole using a small amount of putty. Be sure to completely surround the igniter and to clean the putty out of the screw slot on the head of the bolt. This will make installation of the bolt easier.

Step 6 - Using the wire cutters, snip the head off your brad, nail or pin. Then snip the remaining piece to a length that matches the diameter of the bolt shaft to create an epoxy plug retaining pin.

Step 7 - Insert this retaining pin into the 1/16" hole in the shaft of the bolt. It should pass completely through your plug of epoxy putty, but not extend beyond the bolt on either end. CAUTION: Be careful to not cut the insulation or sever the wires of the igniter when inserting the pin. Ideally, the retaining pin should pass between the two wires.

Step 8 - Allow the epoxy putty to cure.

You'll be reassured to know that multiple members of the high school rocket team I coach, as well as myself, have assembled many pyrotechnic bolts successfully using this method. Thus far, we've had zero failures.

Photo 5: The completed pyro bolt.

Testing Your Pyro Bolt

The first thing you'll want to do is test your creation. I did this by installing the bolt through holes in two pieces of scrap wood. Here's how:

1. Drill a hole that is slightly larger than the shaft of your pyrotechnic bolt through two thick pieces of scrap wood that, when stacked together, are thinner than the length of your bolt.

2. Pass your bolt through the hole in one board, then add a compression spring if you want. This should fit around the bolt and be strong enough to push the two pieces of scrap wood apart easily. Then pass the bolt through the hole in the other piece of wood.

Continued on page 6

We're Paying Cash

For Great Articles for This Newsletter

Are you a writer looking for some serious pocket change? We're paying up to $350 for good how-to articles for this newsletter. If you're interested, see our submission guidelines on the Apogee web site.

www.ApogeeRockets.com/Newsletter_Guidelines.asp

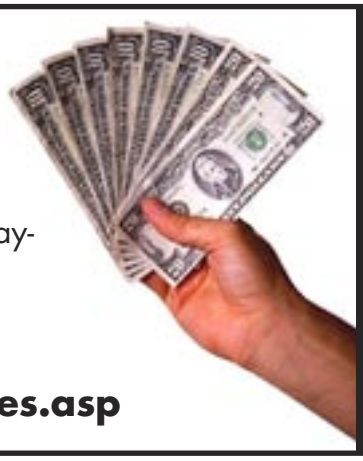

www.ApogeeRockets.com

Continued from page 5

Make Your Own Pyrotechnic Bolts

3. Put the nylon nut onto the bolt and tighten it until the spring is fully compressed and the boards are clamped tightly together.

4. Tug, pull and twist firmly on this joint. The bolt should NOT break. If it does, you may have scored it too deeply with the hacksaw.

5. Attach several feet of wire (at least 10') to the leads of the Q2G2 igniter.

6. Find any old alkaline battery and your safety glasses. Take those items and your test rig outside to a safe location that's away from buildings, pets and people.

7. Set your test rig on the ground and stretch the wire out perpendicular to the axis of the bolt. This will help prevent pieces of bolt from being fired in your general direction.

8. Put on your safety glasses. Check that the area is clear and then touch the leads of the wire to the terminals on your battery. The bolt should split with a small bang and a little bit of smoke and flame. The boards should separate cleanly away from each other but not "fly" apart.

9. Examine the parts of your test rig. You should find both halves of the bolt and your spring nearby. If not, you may want to reduce the amount of powder in your bolts. Your bolt should also be split fairly cleanly at the point you scored it. If the bolt is "shattered" you may have put in too much powder or not adequately scored the bolt. You'll see some scorching on the boards from the black powder, but there should be little or no real damage to the wood.

Continue to build and test bolts until you are comfortable with their consistent and safe performance. The ideal pyrotechnic bolt should split apart completely at the score line without shattering itself or damaging the surrounding material.

Installation and Operation

Once your particular brand of pyrotechnic bolts is performing properly, it's time to install them in a real project. Since there's no way of knowing all of the myriad applications for these bolts, I'm not going to get deeply into specifics. Instead, I'll just cover the basic installation and wiring and allow you the creative freedom to work out the remainder of the details and challenges for your particular project - after all, that's half the fun of this hobby!

To install and use these bolts in an actual rocket, you'll need two things:

1. A secure point of installation between the two mating surfaces.

2. A source of ignition for the internal igniter - this can be a staging timer, an altimeter (both available from Apogee! www.ApogeeRockets.com/Electronic_Payloads.asp) or a radio control triggering mechanism.

The mating surfaces should fit flat against one another and be strong enough to support the load being secured by the bolt. It should also be robust enough to be drilled

Continued on page 7

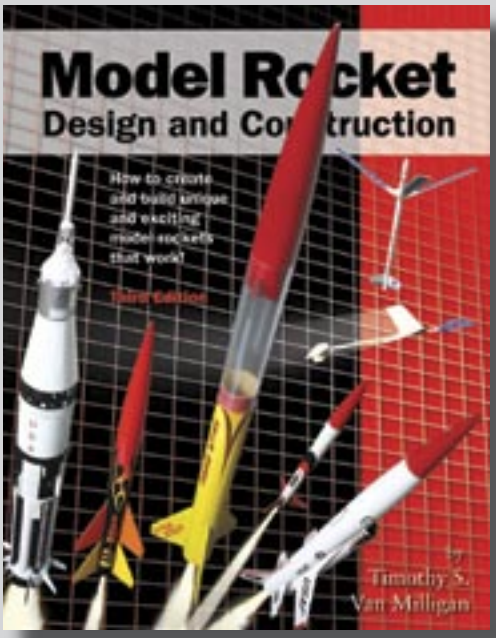

Model Rocket Design and Construction

By Timothy S. Van Milligan

New 3rd Edition Now Shipping!

This new 328 page guidebook for serious rocket designers contains the most up-to-date information on creating unique and exciting models that really work. With 566 illustrations and 175 photos, it is the ultimate resource if you want to make rockets that will push the edge of the performance envelope. Because of the number of pictures, it is also a great gift to give to beginners to start them on their rocketry future.

For more information, and to order this hefty book, visit the Apogee web site at: www.ApogeeRockets.com/design_book.asp

Apogee Components
3355 Fillmore Ridge Heights
Colorado Springs, Colorado 80907 USA

telephone: 719-535-9335
website: www.ApogeeRockets.com

APOGEE COMPONENTS

Continued from page 6

Make Your Own Pyrotechnic Bolts

and survive the rigors of an exploding pyrotechnic bolt. The last thing you want to happen is to have your rocket destroyed or damaged when the bolt separates. These surfaces should also have a recessed area for the optional spring. You want to give the spring a secure surface to push against as it works to separate the two pieces. Once those design determinations are made, it's a simple matter of drilling a hole in both pieces that is large enough to accommodate the shank of the bolt, but not too big as to let the bolt head, the nut or the spring push through.

Whatever triggering mechanism you decide to use for your rocket, you'll need to also make allotments for wiring the bolt to the device. In the case of Black Sabot, the team chose to run the wires on the inside of the rocket from the staging timer to two screws that passed through the airframe adjacent to the head of the bolt. That way, all they would need to do to wire the bolt into the timer is securely wrap the lead wires from the igniter around the screws.

For our application, the staging timer's g-switch would sense the launch of Black Sabot, start the timer and then trigger the pyrotechnic bolt to explode about a second after motor burnout. Once the bolt blew apart, the spring would be able to push the two halves of the airframe apart and the wind would do the rest. In theory, Li'l Ozzy would be released and the motor would ignite to push Li'l Ozzy on its continuing journey skyward.

Conclusion

Black Sabot and Li'l Ozzy have yet to fly. However, their success or failure is not really relevant to this story. For me, what's most relevant is the successful research, development, manufacture, testing and implementation of a fully functional pyrotechnic bolt for high-power rocketry ... by a team of high-school students no less! That's an impressive feat that I'm thrilled to have been a part of.

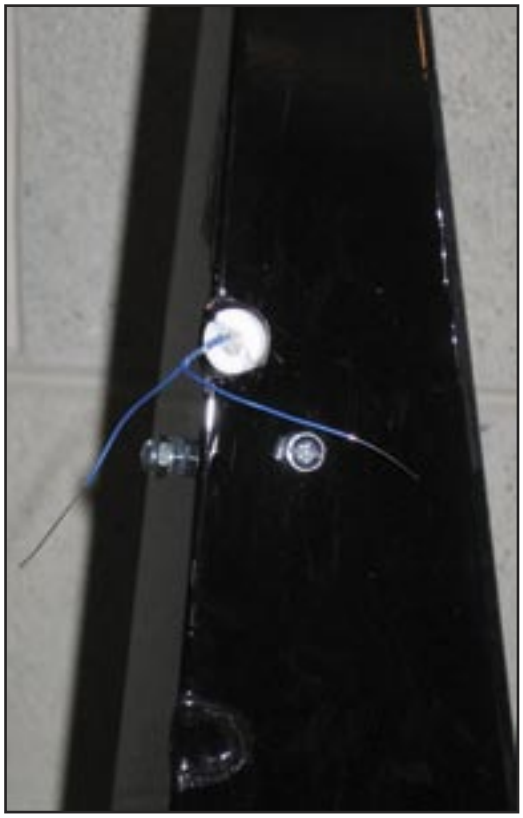

Photo 6: Pyro bolt installed in the Black Sabot rocket.

About The Author:

Marc Stevens has been flying rockets since he was 8 years old. After 30+ years of flying only low-power, he graduated to high-power rocketry with his Level 1 certification and a year later with his Level 2. He is currently working toward his Level 3. In the meantime, he's been active on the advisory board and as the "Voice of Mission Control" for the Rockets for Schools program. He has also coached the Denmark, WI Rocket Team through multiple Rockets for Schools competitions and the successful launch of Dark Doppler at NASA's Student Launch Initiative in Huntsville, AL. To fund his rocket addiction, he works as the Marketing and Communications Manager for a major dot-com company. He resides near Green Bay, WI with his wife and 2 children.