Apogee Components

PEAK OF FLIGHT

NEWSLETTER

In This Issue

Getting Scale Data Quickly For Real Rockets

Cover Photo: Dr. Zooch Freedom-7 Mercury Redstone model rocket kit. Get yours at: www.ApogeeRockets.com/Dr_Zooch_Freedom7_Mercury_Redstone.asp

Apogee Components, Inc. — Your Source For Rocket Supplies That Will Take You To The "Peak-of-Flight"
3355 Fillmore Ridge Heights
Colorado Springs, Colorado 80907-9024 USA
www.ApogeeRockets.com e-mail: orders@apogeerockets.com

ISSUE 267 AUGUST 24, 2010

Painlessly Researching For Scale Model Data

Bart Hennin

If you have ever wanted to build a superb looking, great flying scale model rocket that is the envy of your friends, but then became overwhelmed and discouraged with all the time consuming research required, then this article is for you!

I know that scale modeling can be great fun, and an exciting challenge! But let's face it. When it comes to actually getting scale model data, most people get so lost and bogged down in the "research" part of the project, that they never get to the *fun* part of actually building their model!

In this article you will discover how to use the POWER of the internet to find tons of precise rocket dimensions FAST. As a result you'll be able to start BUILDING your scale model rocket in just days (or maybe even hours!) rather than waiting weeks or months while you collect data. Whether you are a beginner or an expert, you will be flying better scale models in much less time with more confidence than ever before!

Where To Start - How The Internet Has Revolutionized Scale Model Rocket Research!

In the 'old' days we had to send off (by snail mail) tons of requests to rocket manufacturers and government agencies 'begging' for those precious rocket details we needed to accurately build our scale replicas. Then, after weeks of waiting, we'd get some clueless public relations person replying with a postcard or two showing our rocket but with no REAL data! So then we'd repeat the process over and over again (sigh!).

TODAY the internet has revolutionized scale model rocketry! Previously hard to get information is now literally at your fingertips OR just an email away! With new 'advanced' search techniques, anyone with a computer mouse can now rapidly unlock large treasure troves of scale data faster and easier than ever before.

Below, I will detail THREE separate, efficient, and easy ways you can use the internet to quickly acquire loads of accurate scale data.

1) Employ advanced search engine techniques & laser focused keywords to get tons of data.

2) Use simple online methods to get an army of people helping you!

3) Utilize the internet to access great OFFLINE resources too!

I'll ALSO cover...

- Some very low cost ways you can get detailed scale data immediately mailed to you!
- How you can do accurate scale modeling even with incomplete data!
- Ways to use scale model KITS to help you and still end up with a completely original model!

POWERFUL Search Engine Tricks & Secrets

Let's begin with some unique ways to use search engines. Now you can simply use Google if you wish, and Google is very good, but there is a better way. There are neat websites that let you search ALL the top search engines simultaneously!

The BEST multi search engine website that I've found is http://www.engines2go.com/ which lets you query the top DOZEN search engines at once!

Continued on page 3

About this Newsletter

You can subscribe to receive this e-zine FREE at the Apogee Components web site (www.ApogeeRockets.com), or by sending an e-mail to: ezine@apogeeRockets.com with "SUBSCRIBE" as the subject line of the message.

Newsletter Staff

Writer: Tim Van Milligan
Layout / Cover Artist: Tim Van Milligan
Proofreader: Michelle Mason

Continued from page 2

Painlessly Researching for Scale Data

You just enter your search phrase and click the "Cascade Your Search Phrase" button and check off which search engines you want searched from the list (I just click them all). A separate browser window will open for EACH search engine you checked off so if you want to limit the number of windows opened, just check off a few choices at a time.

Your browser's "allow pop ups" must also be enabled... Simply click the option on your browser that says "temporarily allow pop ups".

Another similar site I've had solid success with is http://www.theinfo.com/, which works very similarly.

It has a list of 9 slightly different top search engines. There is a note on the site that it was only last attended to in 2000 so some links returned may be broken but I haven't had this problem. The advantage to this site is it can also search newsgroups and web-rings for you.

The final site I've had success with is http://addictomatic.com/ which searches blogs (more on blogs below) and social sights. You won't get a lot of returns from this engine, but the few that do come back can be gold!

The Best "Data Pulling" Keywords To Use (And Other Search Tips)

In getting scale data, I've had the most success by simply entering the rocket name followed by these special keyword phrases.

"rocket name" exact dimensions for modeling
"rocket name" exact dimensions
"rocket name" dimensions
"rocket name" scale dimensions
"rocket name" scale
"rocket name" detail
"rocket name" plan
"rocket name" color

Continued on page 4

Continued from page 3

Painlessly Researching for Scale Data

"rocket name" photo
"rocket name" blueprint
"rocket name" dimensioned drawing
"rocket name" dimensional drawing
"rocket name" color-keyed drawing
"rocket name" CAD drawing

Granted, these phrases will return a LOT of unrelated sites but with persistence you will find some "gold" buried in your results too! Be sure to dig down past your 1st page results too and check results at least 2 to 3 pages deep.

Note that in the search, words like 'drawing', 'detail', 'plan', 'blueprint' 'photo' etc., we use the SINGULAR form of the word. This ensures that we get both singular AND plural results returning (if we use the plural form, sites with the singular form of the word tend to not show up!).

You probably want to keep your rocket name in quotes to reduce superfluous results (it won't eliminate them, just reduce them). Otherwise "Nike-Apache" will return many Nike shoes sites! Also be specific. "Black Brant" returns all kinds of sites on these birds as well as the rocket series. You may want to go with "Black Brant rocket" or "Black Brant IX" or "Black Brant VI" etc. to reduce the bird sites!

NOW if I had to pick just ONE phrase from the above that's better than all the rest put together, it would be "rocket name" photo as this often returns photos of dimensional drawings! (like these!)

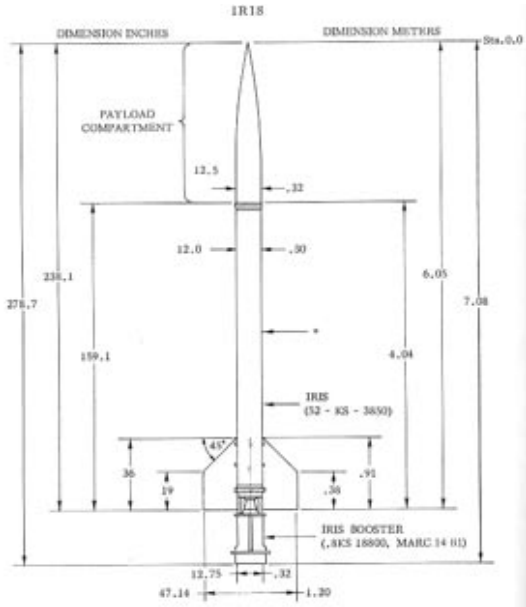

And photos like these...

Continued on page 5

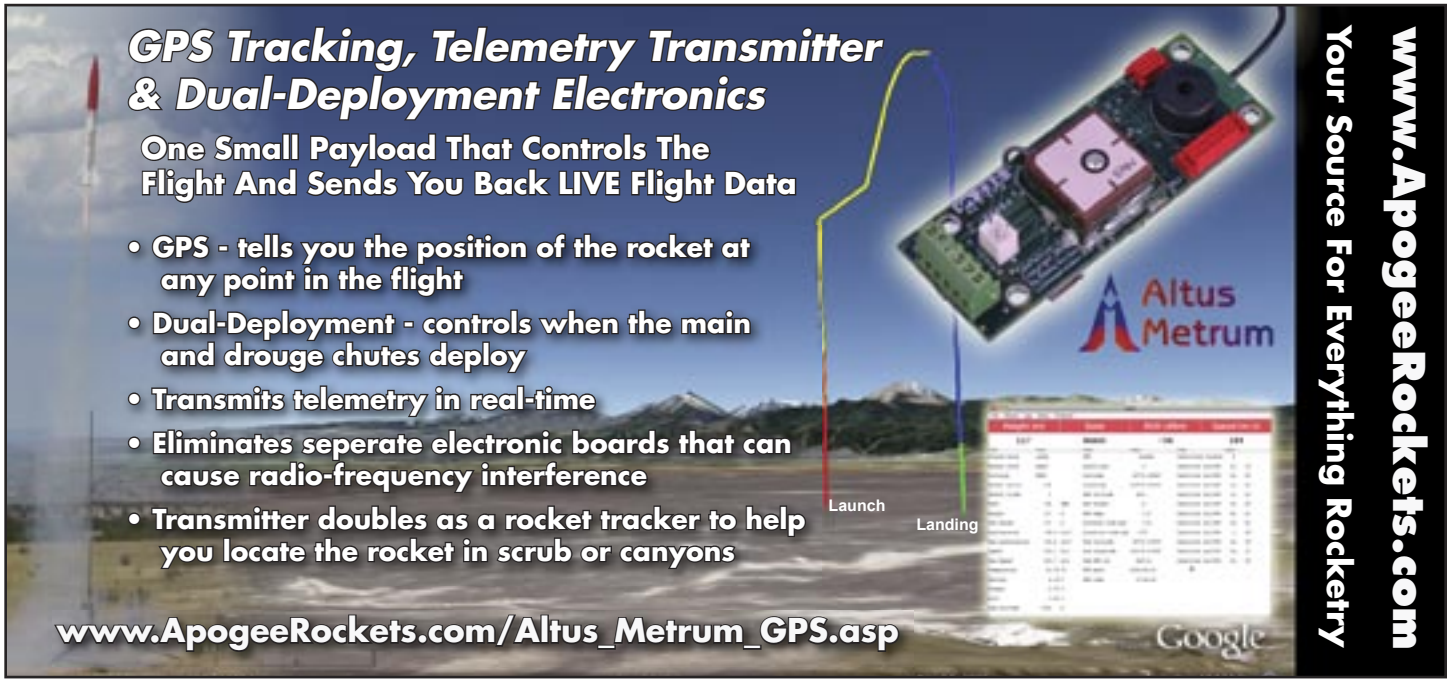

Continued from page 4

Painlessly Researching for Scale Data

In Google on the upper left hand corner you'll want to click the word Images when you search photos (but still use the multi search engine websites cited above too!).

In your searches, you will also likely see the rocket manufacturers and / or museums (where the rocket is displayed) mentioned. NOTE THESE! And search those terms too!

Special Note:

Though it's been mentioned in this newsletter before, here's another great search tip! In your searches you may inevitably find some links to sites that no longer exist. If this is the case, you can use a site called the "WAY BACK MACHINE" to still see some of these sites!

Go to Apogee Rockets page here http://www.apogeerockets.com/education/real_rockets.asp and scroll down for full info.

How To Find MORE Sweet Online Resources!

In your searches, you'll find some additional types of sites. You'll find personal websites of model rocket hobbyists and scale model enthusiasts, and you'll also find websites of many local rocket clubs. Visit these sites, bookmark them and make notes as they will be of great help later.

Also, it never hurts to do a "blog" search and a "forum" search too. You can easily use Google to do this.

http://blogsearch.google.com/ is Google's site for searching blogs specifically AND http://www.google.com/support/blogsearch/ gives you great tips on how to use this site efficiently.

NOW to search for FORUMS on Google, search as you normally would but then on the results page, click on "Show Options" and then click on "Discussions." This will narrow your results to forum discussions.

Alternately, you can just enter "forums: search term" without the quotes. For example, try "forums: model rocketry" and / or "forums: "scale model rocketry" to find forums related to these topics. Try the same terms on your multiple search engine sites too!

You can also use Google to easily search through a specific forum or web domain! To search an individual forum using Google, click on Google's 'advanced search' option (located to the right of the search bar) to get to the Advanced Search screen (image shown on the next page).

Then simply enter your search term(s) in the top section and enter the URL of the forum (or any website!) that you want to search where it says "Search within a site or domain".

I find this is also a handy way to search Apogee Rocket's extensive site too!

Some Very Low Cost Ways To Get Accurate Detailed Scale Data Mailed To You Immedi-

Continued on page 6

Continued from page 5

Painlessly Researching for Scale Data

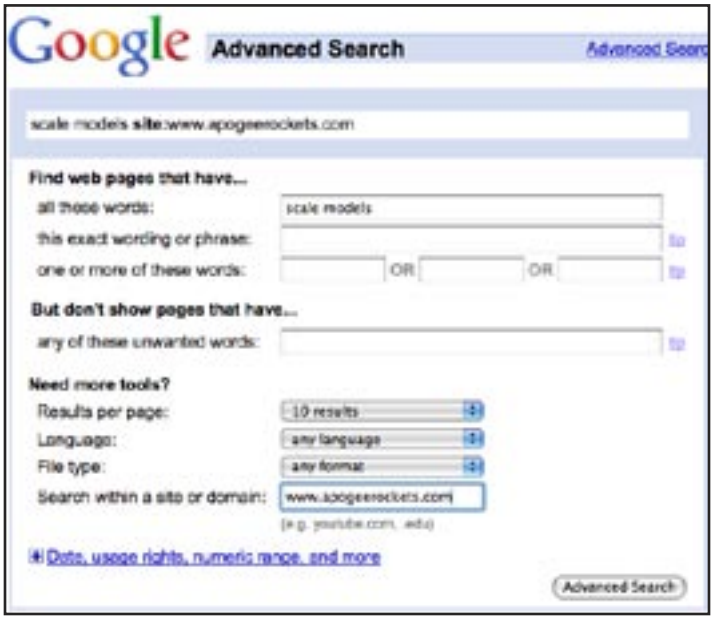

ately!

In doing your searches you'll certainly come across aeronautical museum sites. These places can be hiding large goldmines of data that's just an email away! You'll also find sites that SELL scale rocket data and photos for just a few dollars!

As an example, for just $1-$3, you can order drawings from the Smithsonian National Air & Space Museum for many famous historical rockets!

Addresses for companies and institutions selling scale drawings or photographs can be found through the internet easily. And, in most cases, each drawing also provides sources for more data in case you desire more detail. Just Google "scale rocket data + mail order" again without the quotes. Copy and paste addresses into your favorite word processor to save them.

Now before we get to the remaining ways you can use the internet for your scale model rocket research, some other important and helpful points must be made.

Remember To Stay Flexible So You Can Keep Moving Forward!

One important key to success in scale model rocketry, is to stay flexible. Always look at SEVERAL different models in case one doesn't work out. Always keep your eyes peeled for new info or new ideas or new technology that can help you.

Multi-staging is a good example of how relatively low cost technology has changed the game. In the old days when we only had black powder engines, reliable staging could only be done if the stages on the model were con-

Continued on page 7

Continued from page 6

Painlessly Researching for Scale Data

nected closely together. NOW with composite motors and compact 'smart' electronics, we can fire a 2nd stage that isn't even connected with the first!

The awesome, over 5 ft tall Cosmodrome Aerobee-Hi scale model (www.ApogeeRockets.com/Cosmodrome_Aerobee-Hi.asp) is a perfect example. If you visit the link you'll see that the two stages of the model are clearly separated! So, the original kit could only be flown as a single stage. But Apogee has found a way to convert this kit to a two stager and offers this as an option on the kit!

With new staging electronics like PerfectFlite's MiniTimer3 (also offered by Apogee) /www.ApogeeRockets.com/Staging_Timer.asp this scale model kit becomes upgradeable to a TWO stage flyer!

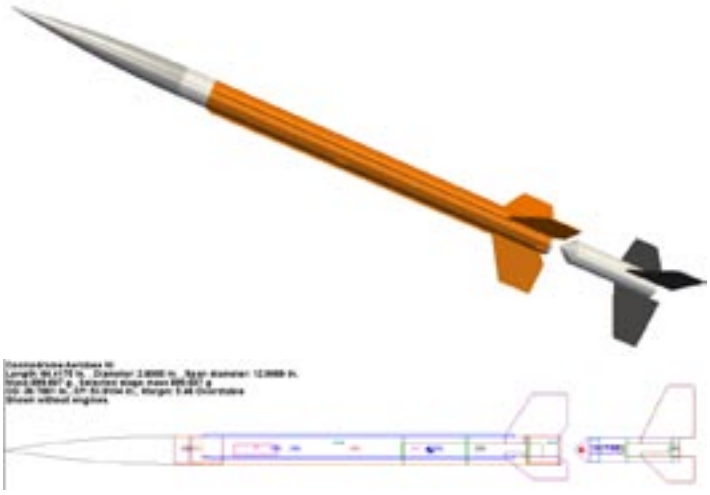

Now for your 1st scale model rocket project, you'll want to keep things simple and do a single stage model. But when you are ready, it's nice to know you have many multi-staging options! Use your imagination (tempered with solid model rocket engineering) to come up with imaginative solutions to any obstacles you find.

When Edison was still trying to invent his electric light bulb, a reporter asked him about the 2,000 plus failures he had had. Edison replied that there had been NO failures! They had now successfully identified over 2,000 materials that would NOT work. This was PROGRESS not failure!

Do Some Back Of The Napkin Mock Up Designs ASAP! (OR better yet, use RockSim!!)

I actually prefer to start laying things out on paper sooner rather than later. This identifies problems early. When stumped, successful scale modelers find innovative ways to keep moving forward. Use the internet not to copy other people's ideas but to draw on their experience!

As soon as you get some general overall dimensions of a model you like, I strongly recommend you rough out a basic design on paper and calculate the CP-CG of the rocket.

DON'T worry about not having completely detailed dimensions before you start designing a mock up! Remember that NAR rules allow for even minimal data of the following...

- Overall length & scale factor
- Significant body diameter(s)
- Nose cone length
- Fin length, width and thickness
- Length of transition pieces
- Color pattern (documented either in writing or by photographs)
- One clear photograph, halftone, or photo-reproduction

You'll find that with a lot of scale model rocket projects, your fins will be too small. Since for accuracy, our scaled dimensions are pretty much fixed, you may have to plan to

Continued on page 8

Continued from page 7

Painlessly Researching for Scale Data

add nose weight and / or fit transparent plastic fins to the rocket (allowed by NAR rules) to make it stable and safe in flight.

You need to know this early and you want to see how extreme the adjustments will potentially be for a given model at a given scale (adding nose weight quickly becomes self defeating!). You want to eliminate unsuitable models early so you can spend your time on what works. Also take a close look at existing scale model kits to get an idea of what works too!

You don't want a detailed design at this point. You just want to start to get a feel for what you are in for flight characteristics wise.

A great way to take the tedium out of this and actually make it extremely FUN is to use RockSim. With RockSim you can make scale changes and other changes on the fly very quickly and see immediately how the model will fly!

http://www.apogeerockets.com/rocksim_demo.asp

Three Ways To Use Scale Model KITS To Help You (and still have an original rocket!)

You will find many sites offering scale model kits and this can be helpful too!

The first way a kit can help is by giving you a better feel for the rocket's detail and color. For example, sometimes you'll have a faded original photo like this...

But a model photo like this...

The model photo sometimes gives you a more true idea of color and detail (although the decals on this model appear too big). Going through kit part lists can give you design ideas too.

The second, and more important way to use a kit is to actually BUILD it! Apogee kits like these are great: www.ApogeeRockets.com/Scale_rocket_kits.asp By building the kit, you not only get the practical building experience, but you also get an intimate feel for designing and building of future more detailed scale models.

Continued on page 9

Looking For A Fun Rocket Kit?

Roam In Our Forest of Over 190 Different Types

- Unique and exotic kits from over 20 different manufacturers
- Skill Levels range from "easy" to "fiendish"
- Sizes from 1/4A motor to level-2-high-power
- We build & fly them to find out what they're like, saving you grief
- More new ones arriving all the time
- Educational bulk packs available too

www.ApogeeRockets.com/All_rocket_kits.asp

www.ApogeeRockets.com

Continued from page 8

Painlessly Researching for Scale Data

NAR rules DO allow for entry of commercially available flying scale model rocket kits providing they are accompanied by additional substantiating data (other than that contained in the kit). So by building the kit, you are not only in a better position to build your own original but you can enter the kit model in competitions too!

The third way to use a scale kit is to "upgrade" it! By adding more precise detailing of your own you end up with an original. It's like making home made soup but using soup starter.

Ok with that, let's get back to some more amazing ways you can expand your library of accurate scale rocket data!

Simple Ways To Get An ARMY Of Others To Do Research FOR You!

Remember above when I said to keep track of all those local club websites and personal rocketry websites you find? Well now we can put them to work!

When you find someone who's worked on scaling the same model(s) YOU have chosen, email them and let them know how thrilled you are with their site! Be specific! Share your enthusiasm too. I don't generally ask for anything specific in my first email but I do try to ask some questions that will motivate them to write back.

I might ask how they were able to achieve such great detail on a specific aspect of the model... people love to talk about themselves and their rockets! Your objective is to build relationships and connections.

As you build relationships, you can start to ask for specifics like if they still have any dimension data or sources. As you build up your own bank of data, you'll also have bartering power too as you'll have something to trade!

Don't be shy about firing off a half a dozen polite, complimentary emails every 2-3 days to different people. If you do this consistently, you'll be amazed at how it will snowball into an avalanche of golden information for you.

However, DON'T be tempted to just send out a generic letter to a bunch of people...this is a form of spamming and gets you nowhere. Actually spend the time to get to know these people's sites before you email them so you can be specific about what you liked.

Also remember this about email replies... SW,SW,SW,N. That stands for "Some Will [reply], Some Won't, So What, NEXT!". In other words, remember that some (most!) of your emails won't get replies. Like anything, it's a numbers game!

You can also get lots of info by joining online groups related to "model rocketry", "high power rocketry" or "scale model rocketry". Go to "Google groups" and "Yahoo groups" and enter the three previous phrases one by one to find some great info (I could give you the links but you know how to search it now!). You'll also find some great model rocketry related links by going to Dmoz and under their topics click on 'recreation' - 'models' - 'rockets'.

Using The Internet To Explore OFFLINE Resources Too!

In the old days, "research" generally meant physically traipsing to your local library (or traveling even farther to a main library) and going through miles of tiny index card files that would tell you to within one PARSEC where your book MIGHT be!

Today most libraries are online and linked together. Further, large bookstore chains like Barnes & Noble are also online and since they allow you to read any book inside the store, you can basically use them as a library too!

Continued on page 10

We're Paying Cash

For Great Articles for This Newsletter

Are you a writer looking for some serious pocket change? We're paying up to $350 for good how-to articles for this newsletter. If you're interested, see our submission guidelines on the Apogee web site.

www.ApogeeRockets.com/Newsletter_Guidelines.asp

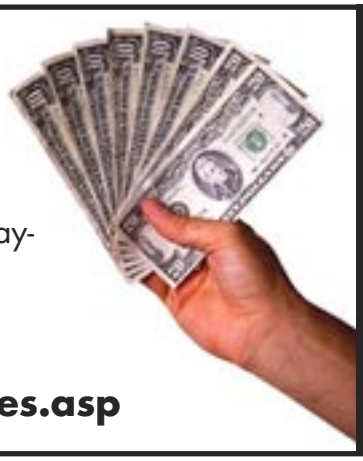

www.ApogeeRockets.com

Continued from page 9

Painlessly Researching for Scale Data

For example, I live near the small town of Ulster in NY State. The Ulster Public Library is tiny but, through their site online I can search over 70 libraries in 5 different counties simultaneously!

I can do this from my home in my robe at 3 in the morning if I wish! When I find a promising book, I can have it delivered to my tiny library so I can pick it up at MY convenience without even traveling far!

Similarly, I can search a book on Barnes & Noble and they will order it into the store nearest me for my perusal.

You may also be lucky enough to find where your rocket of interest is actually displayed.

In your searches you will also come across review sites of Peter Alway's book *"Rockets Of The World"* which is the bible and holy grail of scale model rocket data.

The 4th edition is currently available at the NAR website for only $30 + $11.00 S&H (plus a $4.50 NON-member surcharge if you are not a member). This book has compiled scale data for over 130 rockets from over a dozen countries.

I was lucky enough to find a 3rd edition at a library about 35 minutes from me! You could be lucky too but only if you check!

You'll also see online that Peter's scale library website is regrettably gone. However data from his defunct site is still archived at http://www.rocketryonline.com/jimball/alway/

How To Do Great Scale Modeling With "Incomplete Data"!

Ok, you've found the perfect rocket to model, you have the minimal dimensional data required by NAR rules, and you've determined the rocket to be stable. BUT what if you don't have detailed dimensions?

Here's what NAR's rule says about this...

"Dimensions for which explicit data cannot be found may be calculated by proportioning drawings or photos; dimensions obtained in this manner must be so identified in the data".

Did you catch that? As long as you are HONEST about it, you can proportion off ALL the dimensions you need directly off the rocket drawings or photos! WOW... Let's get building!

Test Flying Using Simple Mock Ups To See What Works!

Once you are ready to start building, begin by constructing 1-3 non-detailed 'functional' versions of your model to test fly. This allows you to make sure its flight characteristics are as predicted, its recovery system works as advertised, and the staging (if multi-stage) works properly. It's better to find and fix problems now rather then crash a finished model you spent many hours painstakingly detailing.

Choose your "Scale Factor" Carefully

Continued on page 11

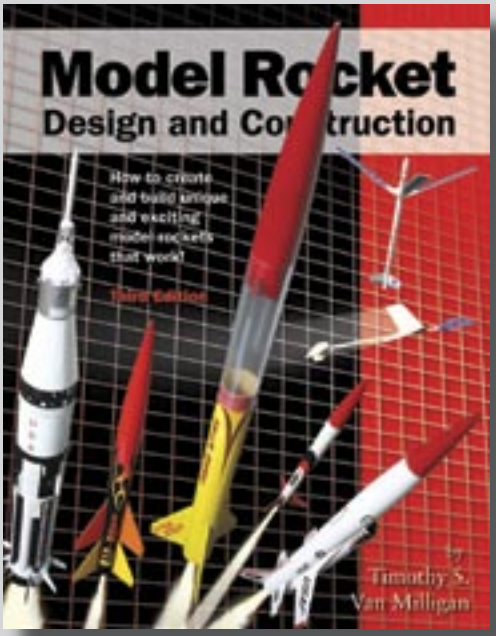

Model Rocket Design and Construction

By Timothy S. Van Milligan

New 3rd Edition Now Shipping!

This new 328 page guidebook for serious rocket designers contains the most up-to-date information on creating unique and exciting models that really work. With 566 illustrations and 175 photos, it is the ultimate resource if you want to make rockets that will push the edge of the performance envelope. Because of the number of pictures, it is also a great gift to give to beginners to start them on their rocketry future.

For more information, and to order this hefty book, visit the Apogee web site at: www.ApogeeRockets.com/design_book.asp

Apogee Components
3355 Fillmore Ridge Heights
Colorado Springs, Colorado 80907 USA

telephone: 719-535-9335
website: www.ApogeeRockets.com

APOGEE COMPONENTS

Continued from page 10

Painlessly Researching for Scale Data

Your best scale factor is a function of many variables such as cost, practicality, amount of detail etc. If you are just starting out, you may find it preferable to use the same scale as an already existing kit as at least you know you'll be in the ballpark of something that works! If cost is a big factor OR you don't have a lot of detailing skills, you might downscale or even do a "Peanut scale" model (see below).

How To Use The NAR Scale Model Rules To YOUR Advantage!

We've already covered ways you can turn NAR's rules to your advantage with the minimum dimensions rule or the proportioning from drawings / photographs rule. We've also mentioned building or upgrading a kit rather than building from scratch. Here are some more ways to turn shortcomings into competitive advantages.

Your first advantage lays in choosing the right scale model rocket event. Did you know that the NAR sponsors EIGHT different types of scale contests? Scale, sport scale, peanut scale, and plastic model conversion just to name a few! (Go to their website and study their rules). With this many categories, you can find a competitive niche even with shortcomings.

For example, if your detailing skills are less than great, you could find a good non-flying plastic model and convert it to a flying model! You would enter it into the "plastic model conversion" event!

Say you've built a beautiful model but to make it fly right you had to alter some dimensions slightly. You can enter it as a "sports scale" model.

If cost or lack of detail is a factor, you can enter the "peanut scale" event - This is a sport scale event where the models cannot be larger than a given maximum size. When choosing a scale, remember that the less detailed the model, the smaller it should be.

With imagination you can turn any obstacle into an opportunity! And don't forget that if your building or detailing skills are not up to speed, you can get tons of help from Apogee Rockets' website: www.ApogeeRockets.com

Advantages Of Creating A "Sport" Scale Model!

Most people get so hung up on 'precision' that they miss the whole lot of fun that sport scale modeling can bring.

A sport scale model rocket is basically the same as true scale BUT in competitions (though supporting data is still required) the model itself is NOT measured for scale

Continued on page 12

Continued from page 11

Painlessly Researching for Scale Data

accuracy. Instead it is judged for similarity of outline to the original from a distance of one meter (39 inches). The level of craftsmanship is also evaluated.

Building a sports model gets you up and flying faster because the pressure of having every detail exactly measured is removed. It provides a 'step' towards building a true to scale model. It lets you learn and gain experience while having fun and it can still be entered in competitions should you so wish!

Also with a sports scale model, you have a better chance of finding parts pre-made rather than having to 'build from scratch' every single piece of the model! If you have to slightly increase fin area or rocket length to get it to fly stably, you can do this with a sport scale model but not with a true to scale model.

In short you can still produce a fantastic looking model with incredible detail but with more design options to get it to fly better and sooner!

Crucial "Baby Steps" ANYONE Can Follow

Getting started in the fun and rewarding challenge of scale model rocketry doesn't have to be complicated.

When it comes to model rocketry today, we are living in a golden age with more kits, more types of engines, and more compact electronics available then ever before (not to mention more scale data and more scale model kits!). Also with the internet, we can get huge volumes of building tips faster and easier then ever. Apogee's site has building tips that can keep you busy for months!

www.ApogeeRockets.com/getting_started.asp
www.ApogeeRockets.com/Rocketry_Video_tips.asp
www.ApogeeRockets.com/education/newsletter_archive.asp
www.ApogeeRockets.com/books.asp

For your first scale model project, it's better to start simple and add challenges at a rate that's comfortable for YOU (rather then start a difficult project that stalls and never gets finished!). Start with using tips in this article to do some basic research. Pick 2-3 models as potential scale projects. Don't be afraid to do some design layouts or use RockSim to explore different designs and different scales.

Consider starting with an existing kit to build your familiarity with the model and build your detailing skills too!

Next try tackling one or more of the following:

- Constructing your own sport scale model.
- Enhancing an existing kit with more detail to make an original.
- Converting a non-flying plastic kit to a flying model.

Continue to build and fly other rockets as you progress with your scale project(s) as the diversion will bring you back to your scale project refreshed and with more varied building experience.

When you feel ready, you can proceed with designing and constructing a truly original scale model of your chosen

Continued on page 13

Continued from page 12

Painlessly Researching for Scale Data

rocket. Don't forget to build 1-3 simple mock ups (not detailed) to 'test fly'. Once you start building the fully detailed version of your rocket, build more than one! Build them in parallel so mistakes on earlier builds are corrected on later builds (you can use your prototype mock ups to practice your detailing!).

Also, if you are serious about scale modeling and model rocketry in general, *"Model Rocket Design & Construction"* is simply a must have. www.ApogeeRockets.com/design_book.asp

It will remove many headaches for you as it has a great section on scale modeling! Plus it has complete chapters on stability, construction, detailing, multi-staging and so much more.

Finally, once you've completed your great looking model, you must ultimately 'bite the bullet' and actually go fly it! That's what separates us flyers from the non-flying modelers. Where their models just sit on a shelf, WE (like the real rocket designers) actually choose to risk ALL of our hard work in that single heart pounding, high stakes moment... of glorious maiden flight!

About the Author:

Bart Hennin graduated in 1984 with a BaSc in Mechanical Engineering from the University of Windsor, Ontario. His senior year thesis was "Optimization Of A Model Rocket For Highest Altitude" which earned a top of the class mark of A+. Following graduation, Bart worked for several years in auto manufacturing engineering, then migrated to technical sales, and eventually ended up in general sales and marketing.

Bart is currently married and is living in New York state. Bart says that his family consists of one obnoxious cat named Thor.

He began the hobby of model rocketry in early high school and is yet another B.A.R. who loves to help others in rocketry. He has instructed kids and adults in model rocket construction through the YMCA and Boy Scouts.