Apogee Components

PEAK OF FLIGHT

NEWSLETTER

In This Issue

How Does Drag Stability Work?

Cover Photo: MadCow Rocketry's Level 2 Kit. Get one at:
www.ApogeeRockets.com//Rocket_Kits/Skill_Level_4_Kits/Level-2

Apogee Components, Inc. — Your Source For Rocket Supplies That Will Take You To The "Peak-of-Flight"
3355 Fillmore Ridge Heights
Colorado Springs, Colorado 80907-9024 USA
www.ApogeeRockets.com e-mail: orders@apogeerockets.com
Phone: 719-535-9335 Fax: 719-534-9050

ISSUE 325 NOVEMBER 6, 2012

How Does Drag Stability Work?

By Tim Van Milligan

We've all seen finless rockets that fly OK, even if they are hard to model in RockSim (www.ApogeeRockets.com/Rocksim/). Today I'd like to talk about them.

The basic issue in designing a rocket is keeping it stable. Stable means that the rocket will fly in a manner that is predictable. In general, a stable rocket is considered low risk, while a unstable one has a high risk for creating damage.

In rocketry, there is a very specific definition of a stable rocket. A stable rocket is one where the Center-of-Gravity (CG) is forward of the Center-of-Pressure (CP). Figure 1 shows a stable rocket.

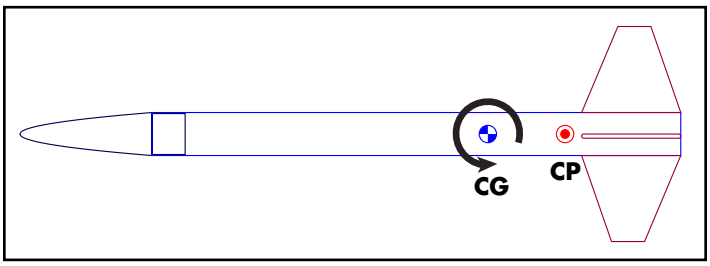

Figure 1: A "stable rocket" is one where the CG is in front of the CP. The rocket will always rotate around the CG point.

The Center-of-Gravity is the place on the rocket where a rocket balances. In other words, the force of gravity pulling down on the back of the rocket is balanced by the force of gravity pulling down on the front of the rocket. It is easy to find, because you can just balance the rocket on the edge of a ruler. The point where the rocket just balances perfectly level is the Center-of-Gravity of the rocket.

The other unique thing about this point, is that the rocket will always rotate around it. That means that if you put a dot on the Center-of-Gravity and then throw the rocket up in the air and induce a spin, it will appear that the dot stays in place. If you're off a little bit in placing the dot, and then spin the rocket, the dot will form a circle. Why? Because the rocket ALWAYS rotates around the point that is the Center-of-Gravity. Always, always, always. Even if the rocket is in outer space where there is no gravity.

Now the Center-of-Pressure is harder to understand. It is where the *aerodynamic forces* are said to balance on the rocket. In other words, the aerodynamic forces in front of the Center-of-Pressure equal the aerodynamic forces behind the center-of-pressure.

What is an aerodynamic force, and how is it produced? That is the basic question that you need to understand before going forward.

First of all, what is a "force?" This is easy. It is either a *PUSH* or a *PULL*. When you push on something, you are exerting a force on it.

An aerodynamic force is a push or a pull that is created by "air." Sounds simple, huh?

Furthermore, in order for a unbalanced force to be created, the air must be moving. Either the air is blowing over the object, or the object is moving through the air. What is important is that there must be motion between the object and the air.

Without movement, there is NO aerodynamic force. A rocket sitting on your desktop has no aerodynamic forces on it.

Aerodynamic Forces

There are only two types of aerodynamic forces: *Lift* and *Drag*

Lift is the force that is perpendicular to the motion of the air, while drag is parallel to the motion of the air.

We'll draw them on the picture of the rocket as an arrow. Remember, they are said to act at the Center-of-Pressure.

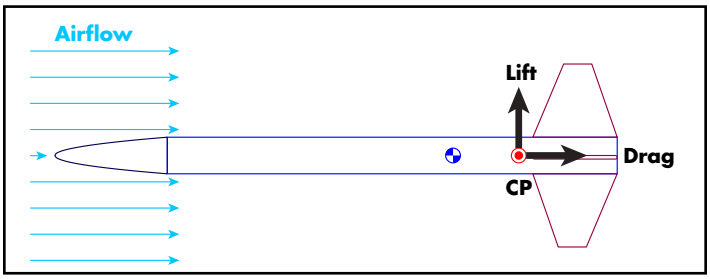

Figure 2: Lift and Drag act at the CP point.

Continued on page 3

About this Newsletter

You can subscribe to receive this e-zine FREE at the Apogee Components web site (www.ApogeeRockets.com), or by sending an e-mail to: ezine@apogeeRockets.com with "SUBSCRIBE" as the subject line of the message.

Newsletter Staff

Writer: Tim Van Milligan
Layout / Cover Artist: Tim Van Milligan
Proofreader: Michelle Mason

Continued from page 2

How Does Drag Stability Work?

Lift is created by every part of the rocket to some extent, but the fins are vastly superior in creating lift force. That is what they are designed to do.

But they only create an unbalanced lift force when the air flows over them at an angle. When the air flows straight along the fin, because of their symmetrical airfoil shape, it produces zero lift. In this configuration, the only aerodynamic force created is drag.

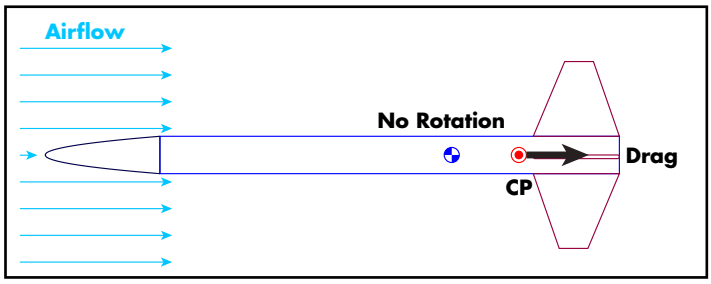

Figure 3: When the rocket cuts the air cleanly (straight on), it creates no unbalanced lift force. Only drag acts on the rocket.

When the rocket is at any angle-of-attack, such that the air is coming off to one side, like a gust of wind hitting the rocket, then a sudden lift force is created.

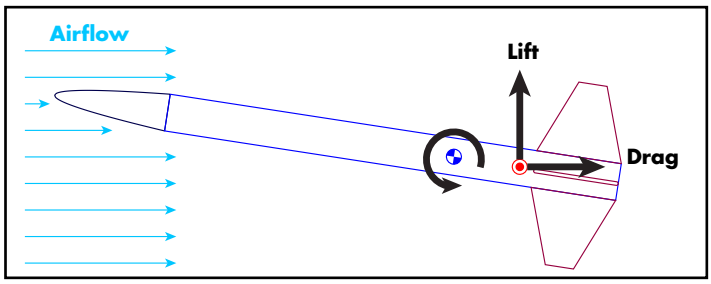

Figure 4: Lift on the fins is created when the rocket begins flying at an angle-of-attack (AOA). Drag also increases.

For a well-designed rocket, this is fine. What happens is that the lift force causes the rocket to rotate back into the wind, as shown in Figure 4.

The important things in this situation is the size of the lift force, and the distance that it acts from the CG point. This is the lever-arm distance, and we'll call it L1, as shown in Figure 5.

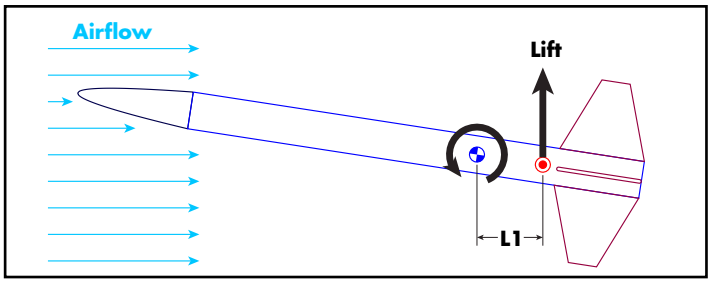

Figure 5: The Lift force multiplied by the distance L1 creates a pitch moment that rotates the rocket back toward the direction of the airflow.

When the Lift force is multiplied by the distance L1, it creates what is called a "pitch moment". This is what causes the rocket to rotate back towards the on-coming air.

The larger the pitch moment, the faster the rocket reacts to the disturbance. This can be a good thing.

Therefore, we can increase the pitch moment in two ways: make the lift force larger, or make the distance L1 greater.

Making the distance (L1) greater is typically easier. You can make the rocket longer, or add nose weight to the front end. You can also change the shape of the fins, although this is not as effective. If you have RockSim, you can quickly see how the CP shifts location when you change the shape of the fins.

Continued on page 4

Continued from page 3

How Does Drag Stability Work?

Changing the magnitude of the Lift force itself is harder to control. A good airfoil is the best way. Using a symmetrical streamlined airfoil will create a larger Lift force than a fin that has a flat-plate airfoil (where the leading and the trailing edges are blunt).

Rocket Stability

When we talk about rocket stability, we are generally talking about the Lift force created by the rocket. We typically ignore the Drag force, even though it does contribute to the stability of the rocket.

In Figure 6, we see that the Drag force also has a lever arm that causes a pitching moment that rotates the rocket around its center-of-gravity.

As before, we multiply the force (Drag) times the lever arm, which in this case is L2 to get the pitching moment.

This pitching moment is going to be much smaller than the pitching moment created by the Lift force on the fins. The reason is that the distance L2 is significantly smaller than L1 (shown in Figure 5).

Because the distance L2 is much smaller than L1, we can say that using Drag to stabilize the rocket is much less effective than using lift on the fins.

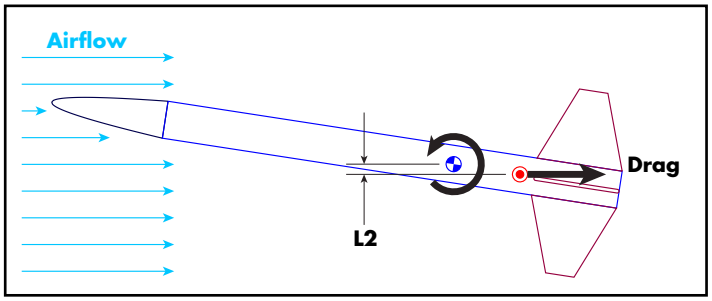

Figure 6: Drag on the fins increases when the rocket begins flying at an angle-of-attack (AOA).

That distance is so small in fact, that it can be negligible, which is why it is ignored in the Barrowman Stability equations. Additionally, a small pitching moment might not be enough to overcome the inertia of the rocket quickly enough.

If it is not quick enough, the rocket can get hit by another gust of wind, and make the situation even worse. This is the reason that you have to be careful in using Drag stability on your rockets. It is sluggish. And in rocketry, things happen very quickly.

Designing for drag stability

As in using Lift force, there are some things you can do to increase the stability of the rocket.

1. Increase the length of the rocket, as shown in Figure 7. What this does is make the lever-arm larger at the same angle-of-attack. Compare the length of L2 in the top versus the bottom drawing.

2. Increase the weight of the front part of the rocket by

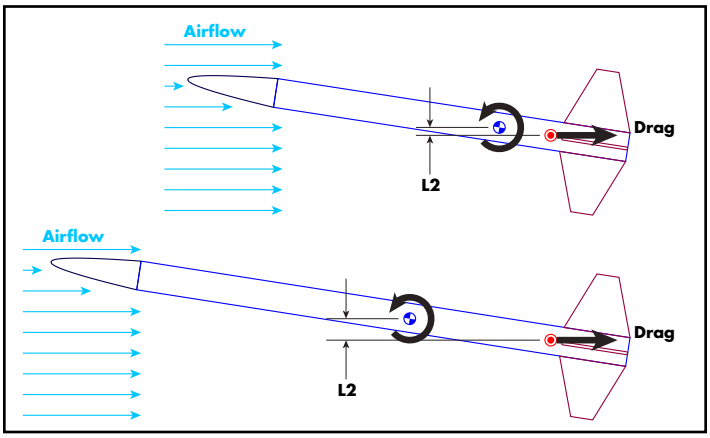

Figure 7: Increasing the length of the rocket increases the effective lever arm that the Drag force acts upon.

Continued on page 5

Continued from page 4

How Does Drag Stability Work?

adding nose weight. This has the affect of moving the CG forward. Again, this increases the moment arm.

3. Increase the Drag force on the rear of the rocket.

Increasing the Drag, as you know, has a major effect on the performance of the rocket. It makes the rocket fly slower and lower.

Slower is bad, right? If the rocket flies slower, the Drag force falls off pretty fast. Remember, the Drag formula is:

$$\text{Drag} = 1/2\ \rho\ C_d\ S\ V^2$$

where:

ρ = density of air

C_d = Drag Coefficient. This is the number you increase when you want to add drag. We'll talk how to do that further on.

S = Reference area. Typically this is the diameter of the rocket tube.

V = Rocket velocity

If you increase the Drag Coefficient (C_d), you will increase the Drag force on the rocket. But this will have the effect of slowing it down, so the velocity diminishes. And since velocity is a squared term, the effect will be to negate the positive effects of increasing the Drag Coefficient.

4. Increase the velocity by using a higher thrust rocket engine. As the speed goes up, the Drag also increases. Double the speed, and the Drag force goes up four times.

5. Increase the span of the Drag inducing elements.

The "drag inducing elements" are those things you might add to the side of the rocket to increase the drag at the base of the rocket. For example, in Figure 8 we see stick-fins. These create no lift, and them make pretty much pure drag. In Figure 9, we see another example of a drag

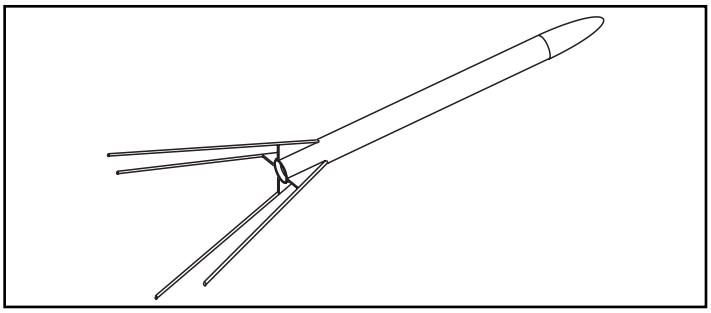

Figure 8: A stick-fin rocket creates Drag to stabilize the flight of the vehicle.

inducing element: a simulated radar antenna. This is on the Sirius Refit U.S.S. Atlantis rocket kit (www.apogeerockets.com/Rocket_Kits/Skill_Level_5_Kits/Refit_U.S.S._Atlantis).

Putting the drag-inducing elements further away from the centerline of the rocket is like putting heavy weights on the tips of fins. What this does is to increase the radial moment of inertia (see *Peak-of-Flight Newsletter 194* at: www.

Figure 9: The radar antenna on the Sirius Refit U.S.S. Atlantis kit is a drag-producing element.

Continued on page 6

We're Paying Cash

For Great Articles for This Newsletter

Are you a writer looking for some serious pocket change? We're paying up to $350 for good how-to articles for this newsletter. If you're interested, see our submission guidelines on the Apogee web site.

www.ApogeeRockets.com/Newsletter/Newsletter_Guidelines

Continued from page 5

How Does Drag Stability Work?

ApogeeRockets.com/Education/Downloads/Newsletter194.pdf).

Increasing this makes it harder for the rocket to rotate around its centerline.

While this normally doesn't matter, the by-product is that it also reduces yaw-roll and pitch-roll coupling (see *Peak-of-Flight Newsletter 220* at: www.ApogeeRockets.com/Education/Downloads/Newsletter220.pdf).

In simple terms, it makes the rocket harder to turn. This is good, because you don't want it to start to deviate from the normal trajectory to begin with.

Computing the Drag Force

Even though we know the formula for Drag, we don't have a good formula for the *Drag Coefficient.* This one missing variable is what makes it virtually impossible to simulate Drag stabilized rockets in Rocksim.

Really, the only tool you have is the Cardboard cutout CP method (see Peak-of-Flight Newsletter 18 at: www.ApogeeRockets.com/Education/Downloads/Newsletter18.pdf). You'll have to use it in this case, unless you own a wind tunnel. This is not a good situation, so you should always design rockets using drag stabilization with an extra element of caution. Here are some general guidelines.

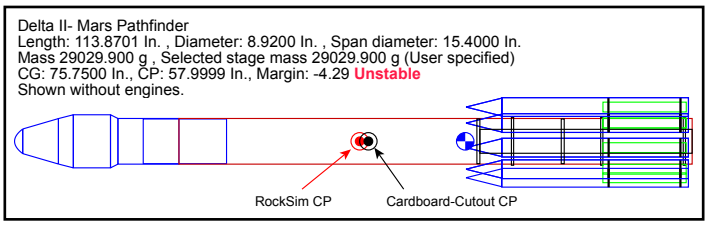

Figure 10: The only useful tool for designing drag stablized rockets is the cardboard cutout CP method.

Additional General Design Considerations

1. Keep the drag inducing devices symmetrical around the centerline of the rocket.

Don't put more drag on one side of the rocket compared to the other. Otherwise you'll have an unbalanced force that will cause the rocket to pitch to one side.

The affect of this would be to move the CP off the centerline of the rocket, and that by itself would start the rocket tumbling. It is destabilizing, as shown in Figure 11.

Additionally, streamline the front of the rocket as much as possible to lower its drag. The large bulbous nose on

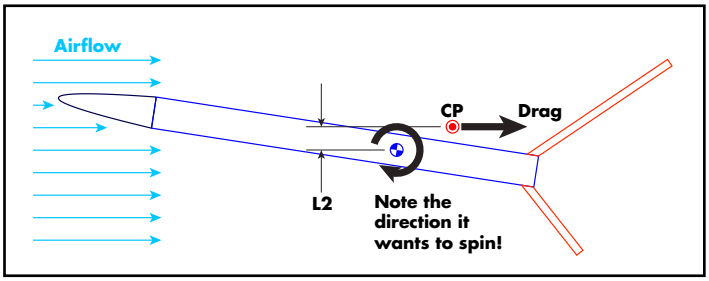

Figure 11: More Drag on one side of the rocket causes the CP to move off the rocket. This is very bad, as there is no way for the rocket to correct itself.

Continued on page 7

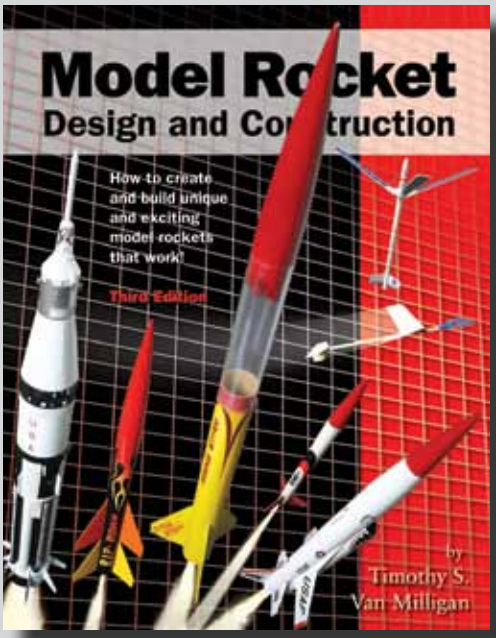

Model Rocket Design and Construction

By Timothy S. Van Milligan

The Expanded 3rd Edition

This massive, 328 page guidebook for serious rocket designers contains the most up-to-date information on creating unique and exciting models that really work. With 566 illustrations and 175 photos, it is the ultimate resource if you want to make rockets that will push the edge of the performance envelope. Because of the number of pictures, it is also a great gift to give to beginners to start them on their rocketry future.

For more information, and to order this hefty book, visit the Apogee web site at: www.ApogeeRockets.com

Apogee Components
3355 Fillmore Ridge Heights
Colorado Springs, Colorado 80907

telephone: 719-535-9335
website: www.ApogeeRockets.com

APOGEE COMPONENTS

Continued from page 6

How Does Drag Stability Work?

the Delta II rocket shown in Figure 10 is high-drag, and will move the CP forward. This is going to require significant nose weight to counteract, making the rocket heavy and lumbering off the launch rod.

2. Remember... with Drag stabilization the CP is further forward.

Since the Barrowman CP equations are based on Lift forces, and we don't have any on the back part of the rocket, the CP is going to move forward significantly. Because of this, you want the drag producing elements to hang them off the bottom of the rocket in order to move the CP rearward. This is why the stick fin rockets, like the Odd'd Sputnik (www.ApogeeRockets.com/Rocket_Kits/Skill_Level_1_Kits/Sputnik_Rocket_Kit) are swept backwards beneath the base of the rocket.

Figure 12: Swept stick-fins move the CP rearward.

3. You can use streamers attached to the base of the rocket in a pinch to add more drag. See Figure 13.

The streamers can really help you add a lot of drag to the rocket with minimal effort. I would suggest adding them for the first flight of the rocket, and then cutting them back on later flights. This allows you to test the model without sacrificing safety.

About the Author

Tim Van Milligan (a.k.a. "Mr. Rocket") is a real rocket scientist who likes helping out other rocketeers. Before he started writing articles and books about rocketry, he worked on the Delta II rocket that launched satellites into orbit. He has a B.S. in Aeronautical Engineering from Embry-Riddle Aeronautical University in Daytona Beach, Florida, and has worked toward a M.S. in Space Technology from the Florida Institute of Technology in Melbourne, Florida. Currently, he is the owner of Apogee Components (http://www.apogeerockets.com) and the curator of the rocketry education web site: http://www.apogeerockets.com/education/. He is also the author of the books: *"Model Rocket Design and Construction," "69 Simple Science Fair Projects with Model Rockets: Aeronautics"* and publisher of a FREE e-zine newsletter about model rockets.

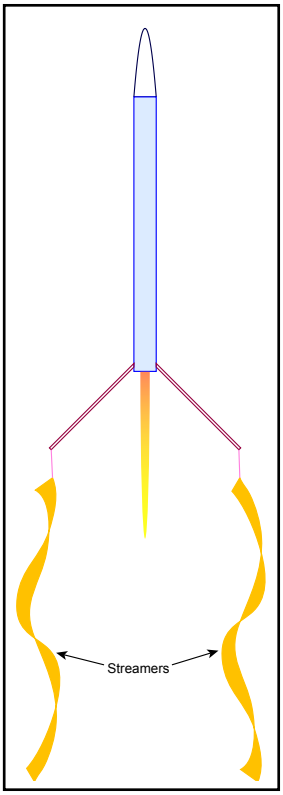

Figure 13: Adding streamers to the rocket adds a lot of drag and puts that force well behind the rocket.