Apogee Components

PEAK OF FLIGHT

NEWSLETTER

In This Issue

Make Centering Rings for Canted Motors

Free Shrox Plan: the "Shelax"

Apogee Components, Inc. — Your Source For Rocket Supplies That Will Take You To The "Peak-of-Flight"
3355 Fillmore Ridge Heights
Colorado Springs, Colorado 80907-9024 USA
www.ApogeeRockets.com e-mail: orders@apogeerockets.com
Phone: 719-535-9335 Fax: 719-534-9050

ISSUE 363 APRIL 22, 2014

Make Centering Rings for Canted Motors

By William Cook

I recently designed a rocket that would have a cluster of three motors canted at a 15-degree angle. While a canted cluster does sacrifice a small percentage of the total motor thrust, it can in theory be a safer design in the event that one or more motors does not ignite because the thrust is focused on an axis where the moment generated by asymmetry is not as likely to make the rocket unstable [*"Clustered Rocket Design", High Power Rocketry*, by Mark Page, May/June 1993]. But the real reason for building such a rocket is that they produce a very impressive trail of smoke and sparks as they leap off the pad! Low-power examples of this type of cluster were popularized by Jim Flis (Fliskits Deuce & Tres kits) and are also available from Sunward (Screamer [www.ApogeeRockets.com/Rocket_Kits/Skill_Level_3_Kits/Screamer] & Eruption [www.ApogeeRockets.com/Rocket_Kits/Skill_Level_3_Kits/Eruption]). In my case, I was attempting to design a 29mm three-motor cluster capable of accommodating 3-grain CTI motors that I could mount in a 4" LOC airframe tube. A rendering of the design is shown in Figure 1.

In a high power rocket, I felt it was necessary to be very accurate when cutting the centering-ring holes and the holes in the airframe through which the motor tubes would pass, especially since I was planning to have the rings produced using a CNC router. Having gone through the rigor of deriving the equations for these curves, I thought I should pass them on. I'm going to save you the lengthy derivation and just give you the formulas. Deriving them is an exercise I will leave to the reader.

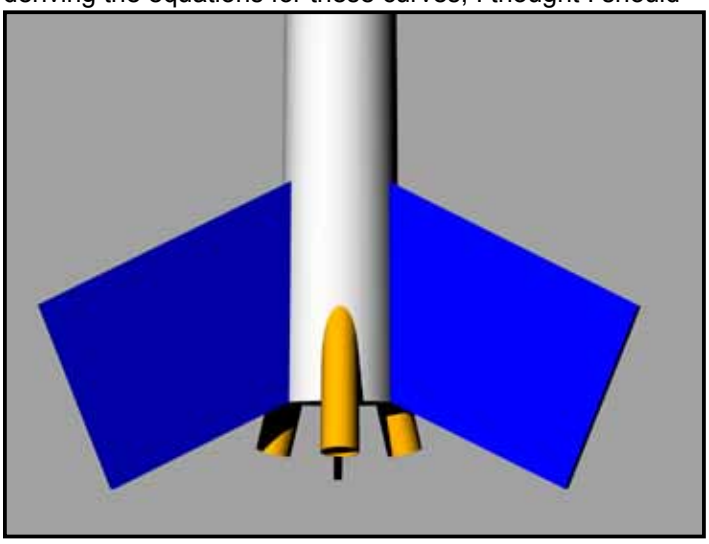

Figure 1: Canted engine cluster.

Centering Rings

First, some definitions. The known inputs are:

R_m Outer radius of motor mount tube

R_{ao} Radius of the outer surface of the airframe tube

R_{ai} Radius of the inner surface of the airframe tube

φ Cant angle of the motor mount tube

n Number of motor tubes in the cluster

Z_p Distance from the aft end of the rocket airframe to the height at which the motor tubes touch

Z_{cr} Distance from the aft end of the rocket airframe to a given side (forward or aft) of a centering ring

These definitions are illustrated in Figure 2 for a triple cluster (n = 3).

The derived quantities are

h Distance aft of the point at which the motor tubes touch to a given side of a centering ring

h_f Distance forward of the point at which the motor tubes touch to the focal point of the cluster

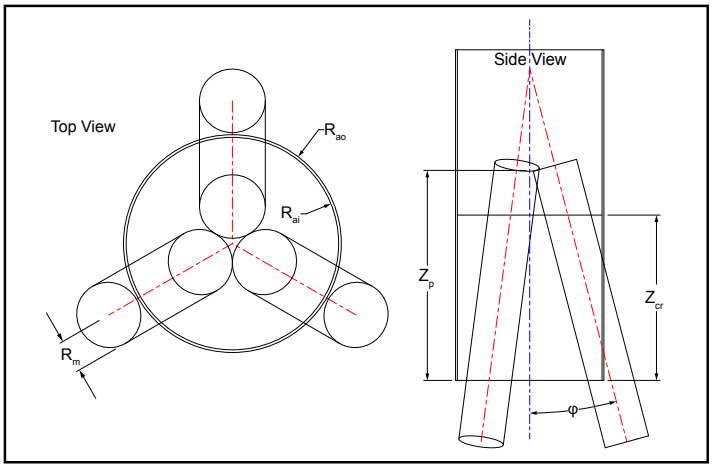

Figure 2: Known input quantities for a three-motor canted cluster (n = 3)

Continued on page 3

About this Newsletter

You can subscribe to receive this e-zine FREE at the Apogee Components web site (www.ApogeeRockets.com), or by sending an e-mail to: ezine@apogeeRockets.com with "SUBSCRIBE" as the subject line of the message.

Newsletter Staff

Writer: Tim Van Milligan
Layout / Cover Artist: Tim Van Milligan
Proofreader: Michelle Mason

Continued from page 2

Make Centering Rings for Canted Motors

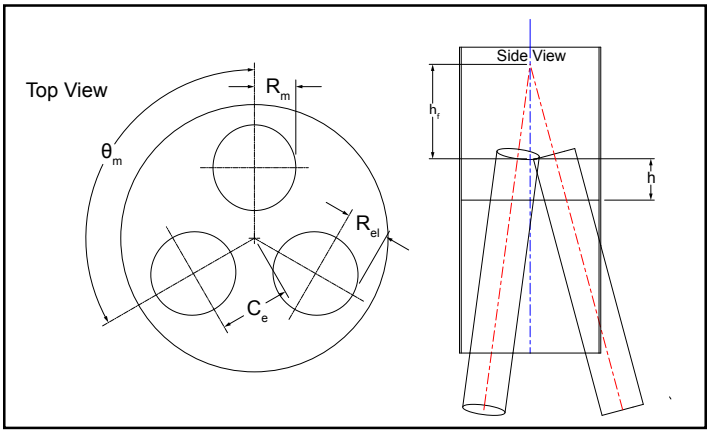

Figure 3: Derived quantities for a three-motor canted cluster.

R_{el} Radius of the long axis of the ellipse representing the intersection of the motor tube outer surface and a plane representing one surface of a centering ring, which is oriented along a radial line of a centering ring

C_e Radial distance from the center of the airframe to the center of the ellipse

θ_m Angle between motor tubes (measured about the longitudinal axis of the airframe)

Z_f Distance from the aft end of the rocket to the focal point of the cluster

These definitions are illustrated in Figure 3.

The following equations apply:

$$h = Z_p - Z_{cr}$$

$$C_e = \frac{R_m}{\sin(180/n)} + R_m \sin(180/n)\left[\frac{1}{\cos\varphi} - 1\right] + h\tan\varphi$$

$$h_f = \frac{\frac{R_m}{\sin(180/n)} + R_m \sin(180/n)\left[\frac{1}{\cos\varphi} - 1\right]}{\tan\varphi}$$

$$R_{el} = \frac{R_m}{\cos\varphi}$$

An example: I want to build a rocket using 4” LOC tubing and having a 3x29mm cluster in the style of a Fliskits Tres with a cant angle of 15°. They’ll stick out the bottom of the rocket a little less than 2” in this case. Let’s also simplify things for the purposes of this example by not adding any extra margin to the tube diameters (that is left to the reader’s preference in their particular application). Our inputs are:

R_m = 15.35 mm
R_{ao} = 50.8 mm
R_{ai} = 49.55 mm
φ = 15°
n = 3
Z_p = 139.7 mm
Z_{cr} = Two 6mm rings with faces at 0.0 mm, 6 mm, 127 mm, and 133 mm

Continued on page 4

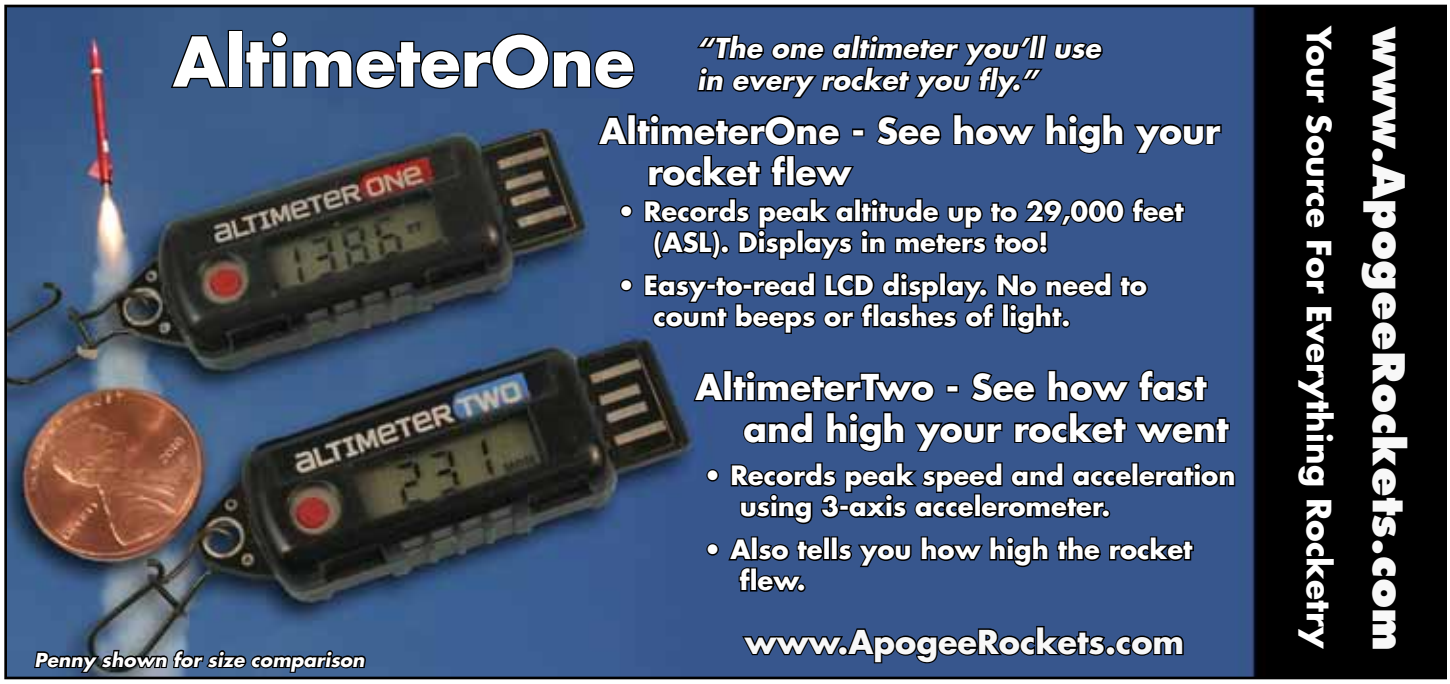

Continued from page 3

Make Centering Rings for Canted Motors

The position of the focus of the motor mount, which according to Mark Page should ideally be about half-way between the center of pressure and the center of gravity of the rocket, is found by:

$$h_f = \frac{\frac{R}{\sin(180/n)} + R\sin(180/n)\left[\frac{1}{\cos\varphi} - 1\right]}{\tan\varphi}$$

$$= \frac{\frac{15.35\text{ mm}}{\sin 60°} + 15.35\text{ mm}\cdot\sin 60°\left(\frac{1}{\cos 15°} - 1\right)}{\tan 15°}$$

$$= 67.90\text{ mm}$$

$$Z_f = Z_p + h_f = 139.7\text{ mm} + 67.90\text{ mm} = 207.60\text{ mm}$$

And the long axis of the ellipse of the motor tube passing through each ring face is:

$$R_{el} = \frac{R}{\cos\varphi} = \frac{15.35\text{ mm}}{\cos 15°} = 15.89\text{ mm}$$

For the forward face of the forward ring, h=133. This gives us:

$$h = Z_p - Z_{cr} = 139.7\text{ mm} - 133\text{ mm} = 6.7\text{ mm}$$

The center of the ellipse will be a distance out from the center of the ring found by:

$$C_e = \frac{R}{\sin(180/n)} + R\sin(180/n)\left[\frac{1}{\cos\varphi} - 1\right] + h\tan\varphi$$

$$= \frac{15.35\text{ mm}}{\sin 60°} + 15.35\text{ mm}\cdot\sin 60°\left(\frac{1}{\cos 15°} - 1\right) + 6.7\text{ mm}\cdot\tan 15°$$

$$= 19.99\text{mm}$$

Moving aft, the other four ring faces have values for C_e of 21.60 mm, 54.02 mm, and 55.63 mm. Top views of each ring showing the two sets of ellipses are in Figure 4.

There are several choices for how to deal with the offset between the upper and lower surfaces of each centering ring:

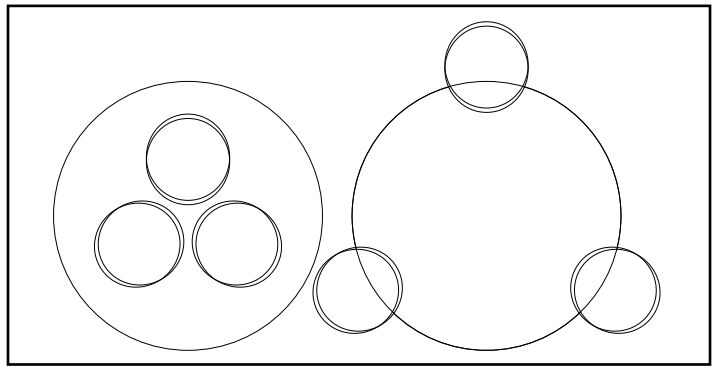

Figure 4: Ellipses showing the intersection of the motor tubes with each face of the centering rings

(1) Make the smallest vertical cut (red in Figure 5) and do a lot of tricky sanding at a 15-degree angle

(2) Make the largest vertical cut consisting of two partial ellipses (blue) plus a couple of short straight segments between them (green) and then use epoxy to fill the gaps

(3) Have them cut on a 5-axis CNC mill ($$$)

There is actually a fourth option that could be used with a 3-axis mill, which involves cutting several rings at many different steps of height in order to produce the slope of the cutout on only one side, shown in Figure 6 at an extreme

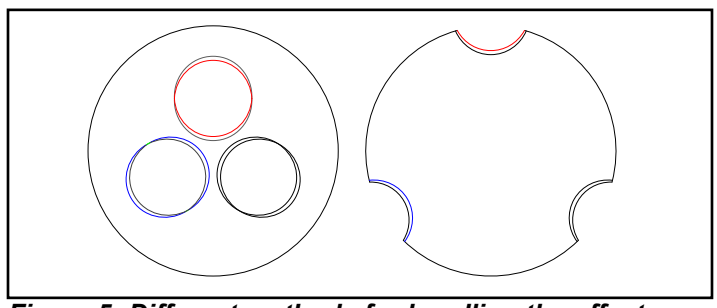

Figure 5: Different methods for handling the offset between centering ring surface intersections

Continued on page 5

Continued from page 4

Make Centering Rings for Canted Motors

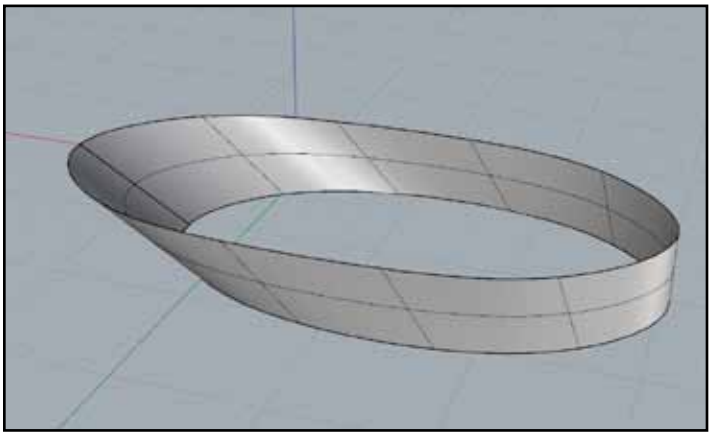

Figure 6: Partial solution for obtaining a close fit between the centering rings and motor tubes

cant angle so that it is clear.

This is somewhat complicated to toolpath, and I opted to go with option (2) above in my own rocket. The final rings as delivered from UpscaleCNC.com are shown in Figure 7. I had them add a small margin (0.1 mm) to the diameter of the motor tubes just to make sure everything worked smoothly.

Airframe Cutouts

Since the motor tubes penetrate the airframe, a cutting pattern is needed to get an accurate cut along this intersection. In a high power rocket, the airframe tube is likely to be thick enough that we have to account for both the inner and outer surface intersecting with the tube, and again I opted to make the largest cut and fill the gaps with epoxy. With 15 degrees of cant angle, a 1.25 mm thick LOC tube can require nearly half a centimeter longer cutout for the inner surface than it would for the outer one. This is a touch trickier, and I have made the assumption in deriving these formulas that all cuts to the airframe will be radial, i.e. perpendicular to the surface.

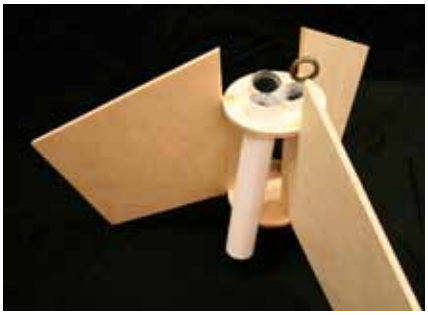

Figure 7: Centering rings and fins as delivered from UpscaleCNC

The solution is to calculate the angular coordinates along the intersection and, for a given height Z, project the greatest angle of the two cuts to the outer surface.

The intersection of the two cylinders is given by the following formulas. For the range of W:

$$\frac{R_a}{\tan\varphi} - \frac{R_m}{\sin\varphi} < W < \frac{R_a}{\tan\varphi} + \frac{R_m}{\sin\varphi}$$

Let:

$$a = \cos^2\varphi - 1$$

$$b = -2W\cos\varphi\sin\varphi$$

Continued on page 6

Continued from page 5

Make Centering Rings for Canted Motors

$$c = W^2 \sin^2 \varphi - R_m^2 + R_a^2$$

$$U = \frac{-b - \sqrt{b^2 - 4ac}}{2a}$$

$$V = \sqrt{R_a^2 - U^2}$$

$$\theta = \tan^{-1} \frac{V}{U}$$

(in radians)

The actual flat cutting pattern has the coordinates:

$$x = R_{ao}\theta$$

$$y = Z_f - W$$

Note the use of the outer airframe tube radius in the calculation of x, regardless of which surface is being used for the intersection. This projects the intersection radially to the outer surface of the airframe. For the example rocket above, this yields an intersection curve for the outer surface of the airframe tube and motor tube shown in Table 1:

The intersection of the inner surface of the airframe tub with the motor tube, projected radially out to the surface of the outer airframe tube, is shown in Table 2 on the next page.

The two curves are shown in Figure 8, with the inner airframe surface intersection in blue and the outer airframe surface intersection in red.

U	V	W	x	y
50.800	0.000	130.280	0.000	77.319
50.797	0.573	130.310	0.573	77.290
50.787	1.145	130.397	1.145	77.202
50.771	1.715	130.544	1.715	77.056
50.749	2.282	130.748	2.283	76.851
		...		
48.67552	14.53731	200.7014	14.74342	6.898065
48.72077	14.38493	202.5258	14.58446	5.073641
48.76901	14.22054	204.3374	14.41313	3.261985
48.82003	14.04437	206.1345	14.22973	1.464885
48.86391	13.89095	207.5994	14.07015	0

Table 1: Intersection of the outer airframe surface with the motor tubes

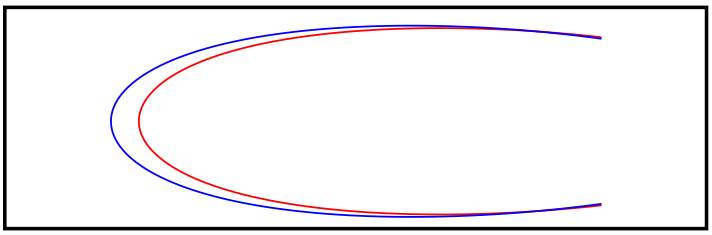

Figure 8: Intersections between the airframe tube inner (blue) and outer (red) surfaces with the motor tube, projected radially to the outer airframe surface

Continued on page 7

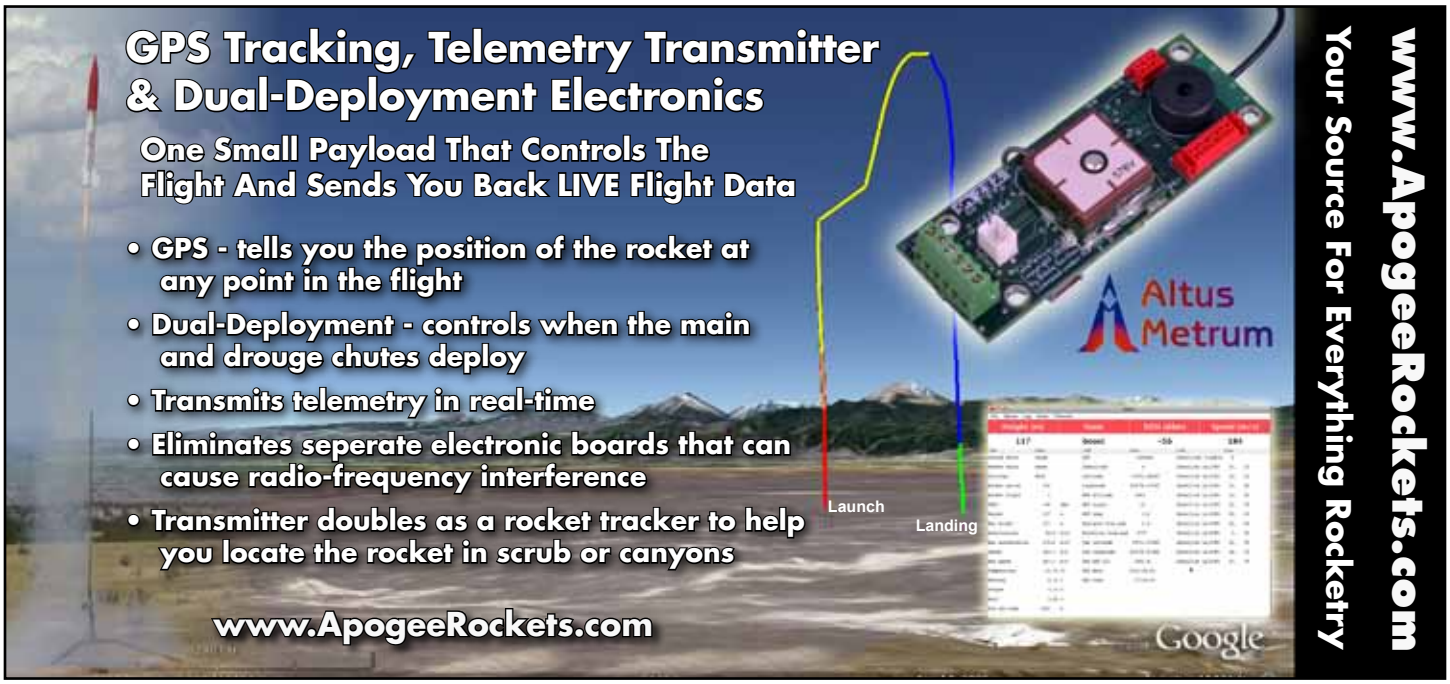

Continued from page 6

Make Centering Rings for Canted Motors

U	V	W	x	Y
49.550	0.000	125.615	0.000	81.984
49.547	0.576	125.645	0.576	81.955
49.537	1.151	125.732	1.151	81.867
49.520	1.724	125.878	1.724	81.721
49.497	2.294	126.083	2.295	81.516
49.467	2.860	126.345	2.861	81.254
...				
47.37463	14.52056	196.0363	14.73686	11.56313
47.4214	14.36709	197.8607	14.57642	9.738704
47.4712	14.20168	199.6724	14.40368	7.927049
47.52382	14.02459	201.4695	14.21894	6.129949
47.72636	13.31905	207.5994	13.48489	0

Table 2: Inner section of the inner airframe surface with the motor tubes, projected radially to the outer surface of the airframe

To generate the final cut line, the red and blue curves must be joined by a straight tangent segment (green) as shown in Figure 9.

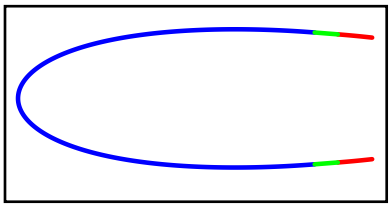

Figure 9: Composite intersection for the motor tube penetration cut-out on the airframe.

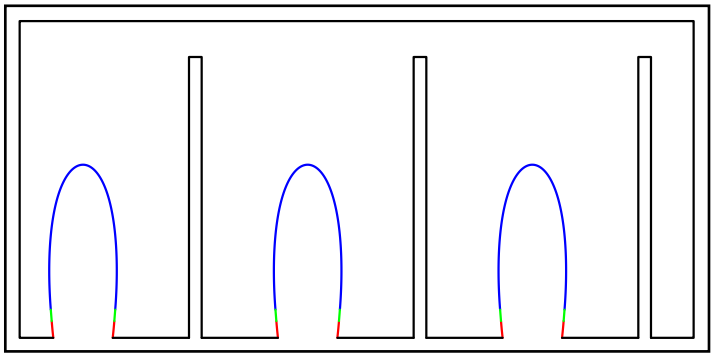

Figure 10: Cut template for the airframe tube

The final cut template for the airframe tube is shown in Figure 10. Figure 11 shows the airframe after the template has been used to make the cut-outs.

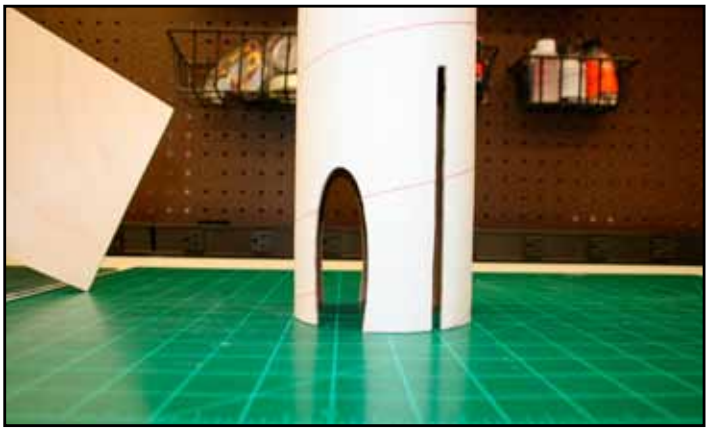

Figure 11: Airframe which has been cut to receive the motor mount/fin assembly

Continued on page 8

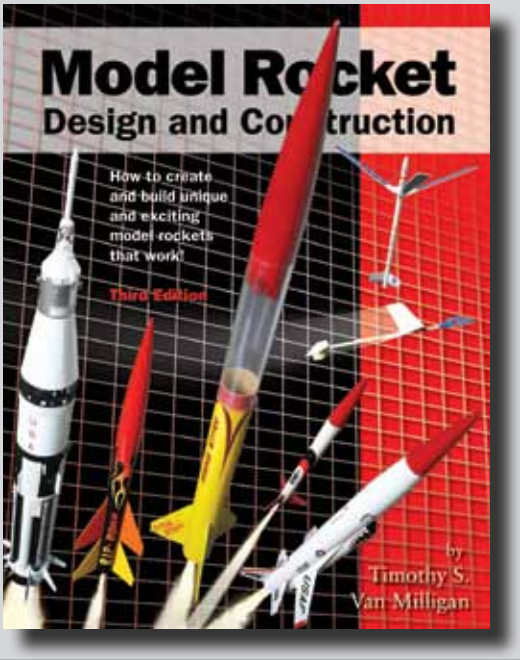

Model Rocket Design and Construction

By Timothy S. Van Milligan

The Expanded 3rd Edition

This massive, 328 page guidebook for serious rocket designers contains the most up-to-date information on creating unique and exciting models that really work. With 566 illustrations and 175 photos, it is the ultimate resource if you want to make rockets that will push the edge of the performance envelope. Because of the number of pictures, it is also a great gift to give to beginners to start them on their rocketry future.

For more information, and to order this hefty book, visit the Apogee web site at: www.ApogeeRockets.com

Apogee Components
3355 Fillmore Ridge Heights
Colorado Springs, Colorado 80907

telephone: 719-535-9335
website: www.ApogeeRockets.com

APOGEE COMPONENTS

Continued from page 7

Make Centering Rings for Canted Motors

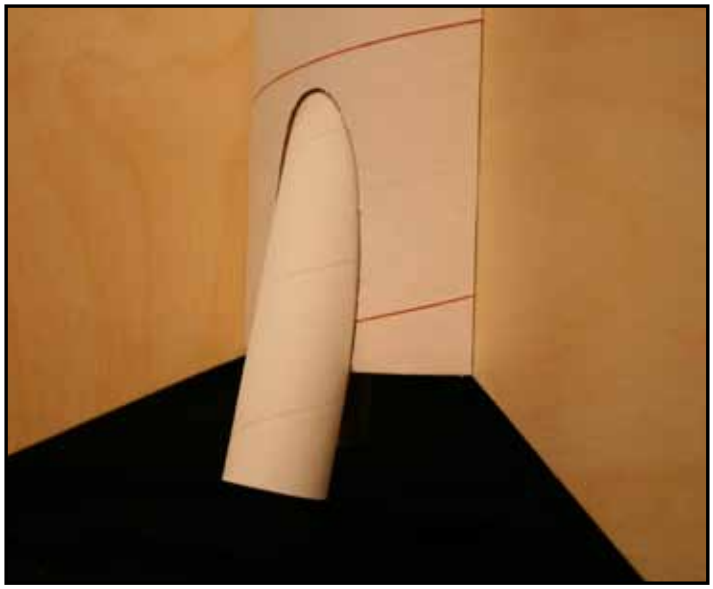

Figure 12: Side view of the motor tube and airframe intersection

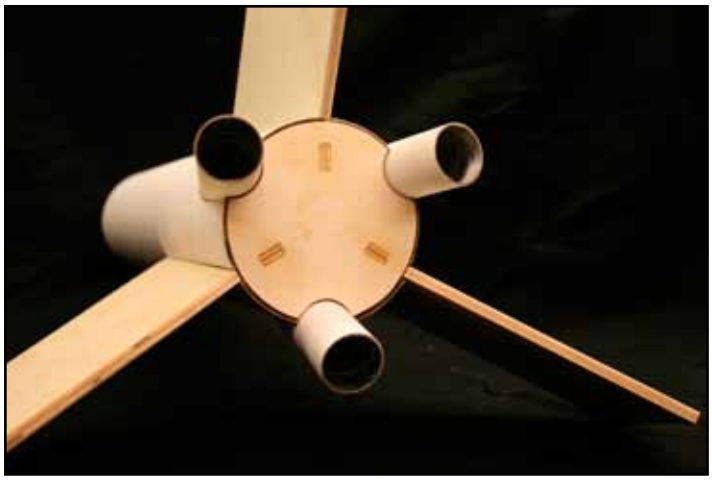

Figure 13: Aft view of the motor tube/airframe intersection

The final dry fit of all the parts is shown in Figure 12 and Figure 13.

As mentioned above, the difference in height between the two airframe/motor tube intersections can be substantial. While I usually use a traditional thickened epoxy like RocketPoxy (www.ApogeeRockets.com/Building_Supplies/Adhesives/G5000_RocketPoxy_2-Quart_Package) for that sort of job, I was not looking for a smooth transition. My intention was to use a vinyl chrome wrap to give the protruding tubes the look of a hot-rod tailpipe and I wanted sharper corners. I found Fixit Epoxy Clay (www.ApogeeRockets.com/Building_Supplies/Epoxy_Clay/FIXIT_Epoxy_Clay) to be perfect for the job, as it can be sculpted just like modeling clay to almost any shape and cures with a rock-hard surface. The results are shown in Figure 14.

Figure 14: The faired and primed fin can

Continued on page 9

Continued from page 8

Make Centering Rings for Canted Motors

Motor retention can be an issue when the motor tubes stick so far out of the rocket. Traditional screw-on retainers (www.ApogeeRockets.com/Building_Supplies/Motor_Retainers_Hooks/Screw-on_Retainers_29mm) tend to be a bit bulky and awkward-looking in this situation. One can always use a friction fit, but I have never been particularly fond of this method. For larger motors a minimum-diameter retainer may be a solution. I chose to use a system that I saw a picture of on Andrew Hansom's Dos Kraken. My implementation is shown in Figure 15, and was made by bending 1/16" strips of aluminum to fit over the lip of the aft closure of the motor. It turned out to be relatively easy to fabricate and very light weight.

A few more notes on design and construction are in order:

1. Once the airframe has been cut and until the motor mount is installed, it can be quite fragile in the aft portion. The tube must be handled delicately during test-fitting to avoid getting a kink in it at one of the tube spirals.

Figure 15: Motor retention system

2. Since I chose to design the motor mount with interlocked fins that would need to be inserted into the airframe in one piece, I also designed the aft centering ring to be at the aft end to avoid having six fragile sections of airframe exposed aft of the ring.

3. You may notice that the airframe cut-outs for the motor tubes are not at their widest point at the aft end of the rocket (see Figure 10). For paper tubes, this is fine to a degree. For stiffer materials you may need to lower the motor tubes to make insertion easier (or even possible). The exact equations for finding this point are quite complicated and the solution is best found iteratively (see *Peak-of-Flight Newsletters* 121 and 127 for the type of technique you can use: www.ApogeeRockets.com/Education/Downloads/Newsletters127.pdf).

4. One must take care to design the rocket such that there is adequate space between the motor tube and the fins for the launch rail!

5. As with all clusters, the center of gravity of this rocket is quite far aft, and even more so than usual in this case because of the aft protrusion of the motor tubes. For this reason, one may find that it is necessary to add quite a bit of weight to the nosecone to ensure a stable flight. I added 10 ounces of weight to the nose of my rocket. A good design tool (such as Rocksim) is indispensable in the process of determining the proper amount of weight to add.

6. A detailed discussion of how to simulate the effect of canted clusters on the flight of the rocket can be found in *Peak-of-Flight Newsletter* issue 226 (www.ApogeeRockets.com/Education/Downloads/Newsletter226.pdf).

7. If you are using motor ejection, it may be a good idea to stagger your ejection charges to avoid over-pres-

Continued on page 10

Continued from page 9

Make Centering Rings for Canted Motors

surizing the airframe.

Results

The Mega Der Drei Max was completed just in time for the Mega Max drag race during Red Glare XVI, and is shown in Figure 16.

Figure 16: The Mega Der Drei Max

It flew on three Pro29 125G131 Smoky Sam propellant kits. I staggered the ejection charges at 7, 9, and 11 seconds. All three motors lit and the Drei left of the pad and scooted to an altitude not typically seen in a Der Red Max. And of course, best of all, the liftoff included the wonderful triple-plume of black smoke that is the real reason to build a canted motor mount (Figure 17).

Conclusion

Being able to produce accurate geometry for this type of motor mount removes a significant hurdle to undertaking a build such as this, and the availability of CNC parts removes the difficulties of cutting unusual, complex shapes into the wooden centering rings. I was pleasantly surprised at how well the parts fit together. Building the Mega Der Drei Max was a lot of fun, and flying it was even better.

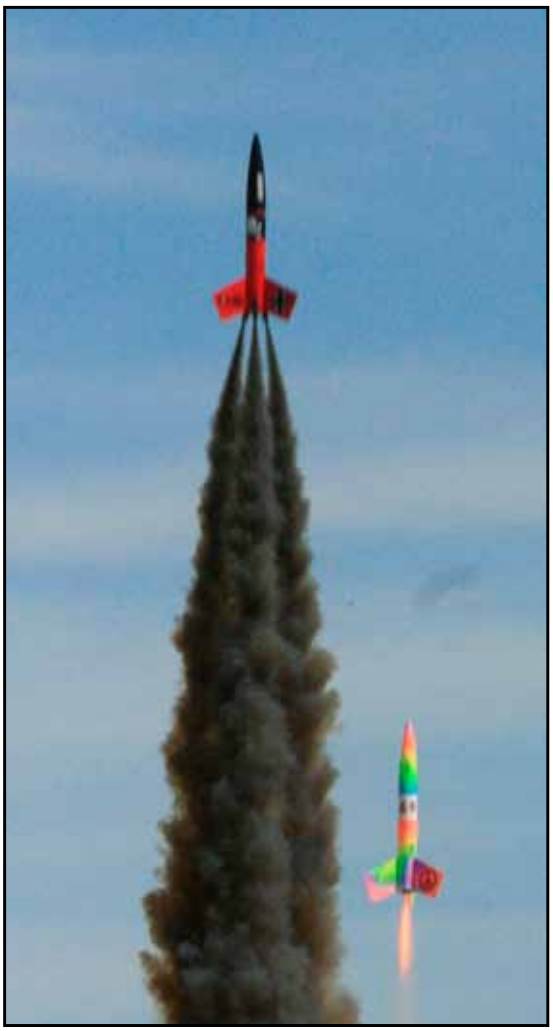

Figure 17: Lift-off at Red Glare XVI (photo courtesy of Mark Emerson)

About the Author

William Cook is a Naval Architect living in Annapolis, Maryland who flies his rockets with MDRA. A recently born-again rocketeer thanks to the enthusiastic interest of his two sons, Bill has spent much of his career developing 3D modeling software.

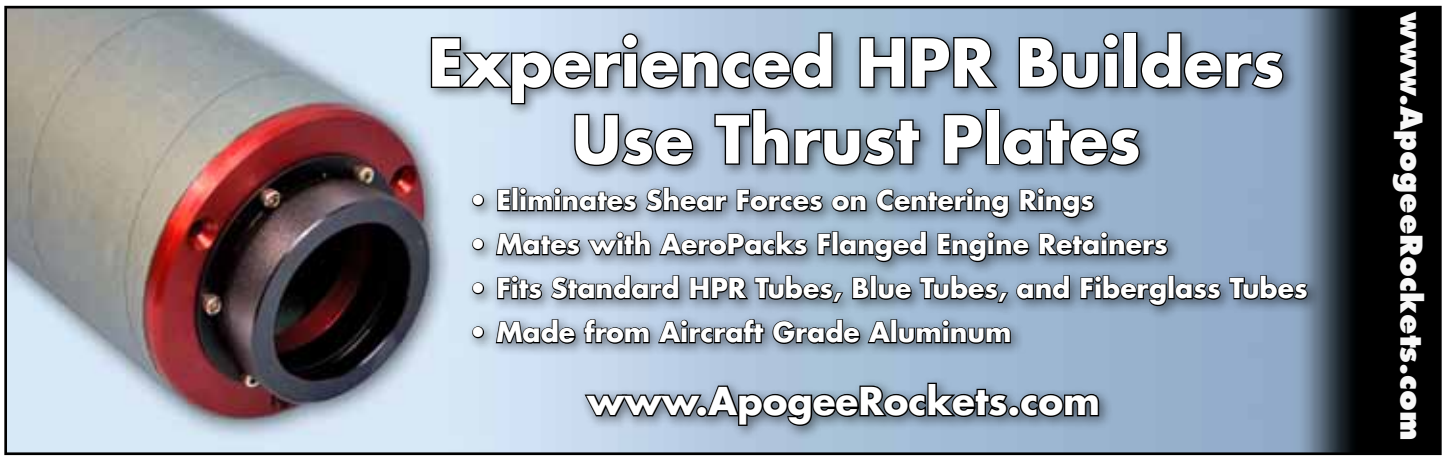

Shrox Plan: The "Shelax"

By Shrox

Need A Parachute?

Apogee Has The One You're Looking For!

Join The NAR.org

Mention Apogee Components

We're Paying Cash

For Great Articles for This Newsletter

Are you a writer looking for some serious pocket change? We're paying up to $350 for good how-to articles for this newsletter. If you're interested, see our submission guidelines on the Apogee web site.

www.ApogeeRockets.com/Newsletter/Newsletter_Guidelines