PEAK OF FLIGHT

NEWSLETTER

ISSUE 409 | JAN 26 2016

IN THIS ISSUE

How to Make Paper "Ogive" Nose Cones & Tail Cones

Part 1: Design & Drafting

Cover Photo: Noris Rocketry "Vostok" | Find it at ApogeeRockets.com/Rocket_Kits/Skill_Level_4_Kits/Noris_Rocketry_Vostok

Apogee Components, Inc.
Your Source For Rocket Supplies That Will Take You To The "Peak-of-Flight"
3355 Fillmore Ridge Heights Colorado Springs, Colorado 80907-9024 USA
www.ApogeeRockets.com e-mail: orders@apogeerockets.com Phone: 719-535-9335 Fax: 719-534-9050

APOGEE COMPONENTS

PEAK OF FLIGHT

How to Make Paper "Ogive" Nose Cones: Pt 1

By David Stribling

Have you ever found a neat tube laying around and thought to yourself, "That would make a cool rocket!" but then realize you don't have a nose cone that fits the tube? Or you buy a model rocket tube on the market but then realize the available nose cones don't fit the design you have in mind?

If you have a lathe (or a drill), you could turn your own nose cone from wood or foam. In the Peak of Flight archives there is an interesting article about building foam nose cones using hot wire [Tool Plan - Make foam nose cones! Peak of Flight #087 www.apogeerockets.com/education/downloads/Newsletter87.pdf]. I have seen people go the simple route and build a conical nose cone from paper…but that is really boring! I will show you a technique to build "ogive" nose cones from paper, and special tools aren't required!

I put ogive in quotes because we are going to approximate an ogive curve with straight line segments, but I think you will agree the technique turns out a nice looking cone with just three segments.

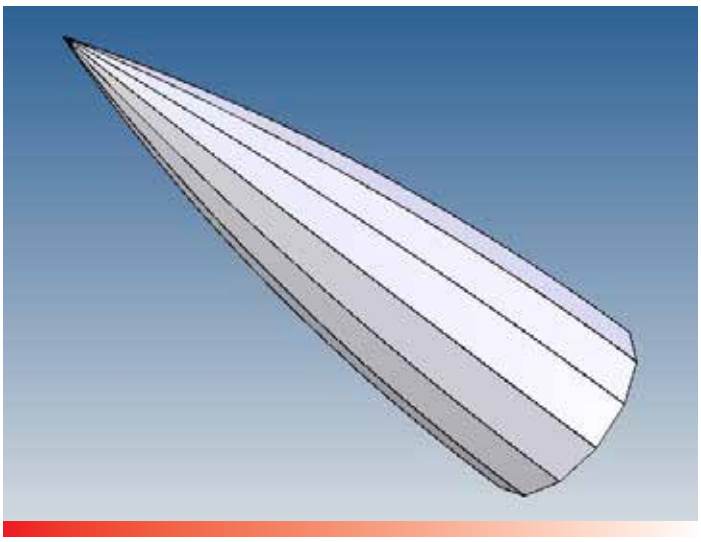

Figure 1

I developed this technique while building a "V2-like" scratch model. I was thinking the V2 had been built with longitudinal strips (think Graf Zeppelin airship), so I worked out the gore design with CAD and built a nose cone (Figures 1 and 2).

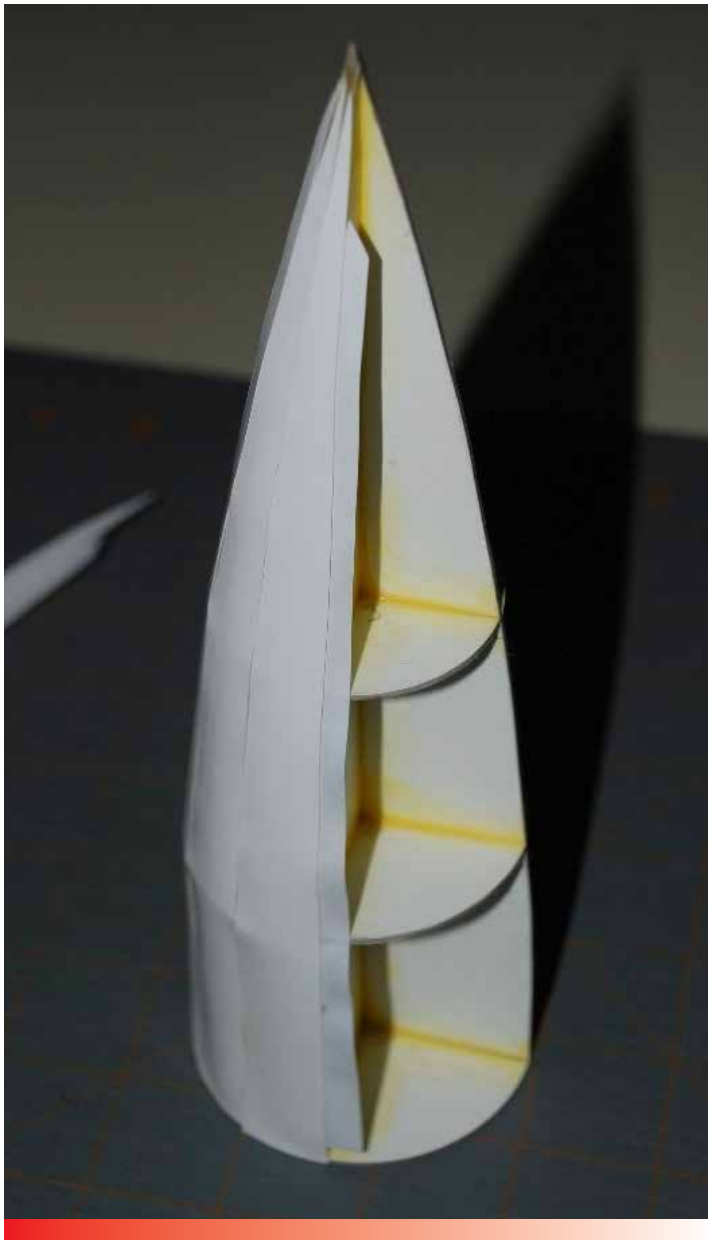

Figure 2

Continued on page 3

About this Newsletter

You can subscribe to receive this e-zine FREE at the Apogee Components website **www.ApogeeComponents.com**, or by clicking the link here Newsletter Sign-Up

Newsletter Staff

Writer: Tim Van Milligan
Layout/CoverArtist: Chris Duran
Proofreader: Michelle Mason

Making Paper Nose Cones: Pt 1

Continued from page 2

The result was pretty disappointing since I used only four support ribs and the gores wrin-

Figure 3

kled in the areas without support, so I set the project aside. Later, when I attended NARCON 2012 in Hutchinson, Kansas, I toured the Cosmosphere and saw an actual V2 was on display. I noticed the panels ran circumferentially, rather than longitudinally (Figure 3). I realized a tapered shroud would be a closer match to the V2 construction technique than my gore technique.

I revived my project, and using CAD, designed the shrouds for the nose and boattail. The first attempt was pretty rough, and required several rounds of applying filler, sanding, and re-applying filler. The final result turned out better than I thought it would, (Figures 4 and 5) but I wanted to refine the process.

Figure 4

Figure 5

Continued on page 4

North Coast Rocketry

Mid & High Power Rocket Kits!

- Big Kits with Classic Styling and Bold Graphics
- All Rockets Feature Laser-Cut Plywood Fins and Rings
- Easy-to-Build. Durable. Exciting, and a Real Joy to Fly!

https://www.apogeerockets.com/North_Coast_Rocketry

Making Paper Nose Cones: Pt 1

Continued from page 3

One of the first things I noted during construction was the support ribs had been cut with a curved profile and I was trying to fit straight-sided conical shrouds to those ribs. This distorted the shrouds and formed lumps that had to be filled before painting (Figure 6). So the next try would use ribs with straight sides (Figure 7).

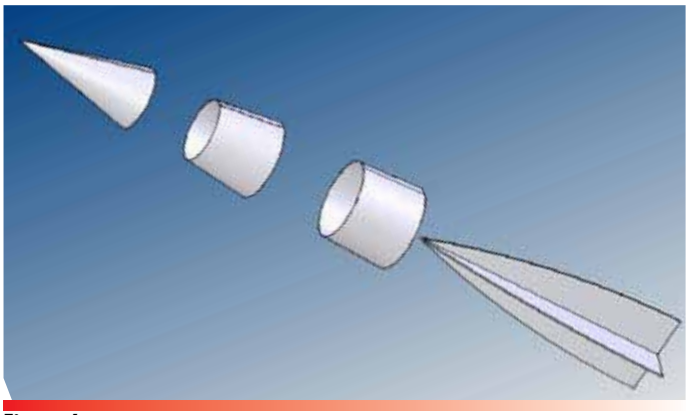

Figure 6

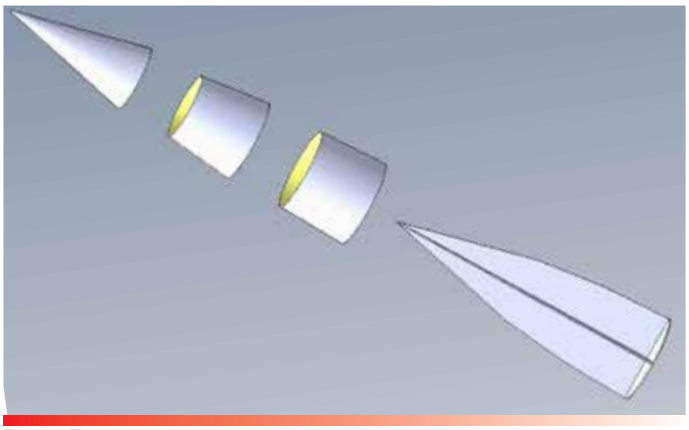

Figure 7

The other thing I realized was I did not take the thickness of the shroud material and the thickness of the bottom centering ring into account when sizing the shrouds and support ribs, so the shrouds did not fit properly. I am using 110# cardstock for the shrouds, which is about 0.005 inch (0.127 mm) thick. The support ribs and centering rings are Crescent board which is about 0.06 inch (1.524 mm) thick. I have dialed those corrections into my design, and the results are better.

As stated above, this nose cone design will approximate a tangent ogive shape. From Wikipedia [en.wikipedia.org/wiki/Nose_cone_design], the equation of the tangent ogive curve is:

$$\rho = \frac{R^2 + L^2}{2R}$$

Where R is the base radius (1/2 base diameter) and L is length of the cone

The height (y) for any length (x) can be calculated from this equation:

$$y = \sqrt{\rho^2 - (L - x)^2} + R - \rho$$

I modified this equation so that y at x=0 is equal to R, and y at the nose tip (x=L) is zero: For

$$y = \sqrt{\rho^2 - x^2} + R - \rho$$

the example of this article, I am going to make a

Continued on page 5

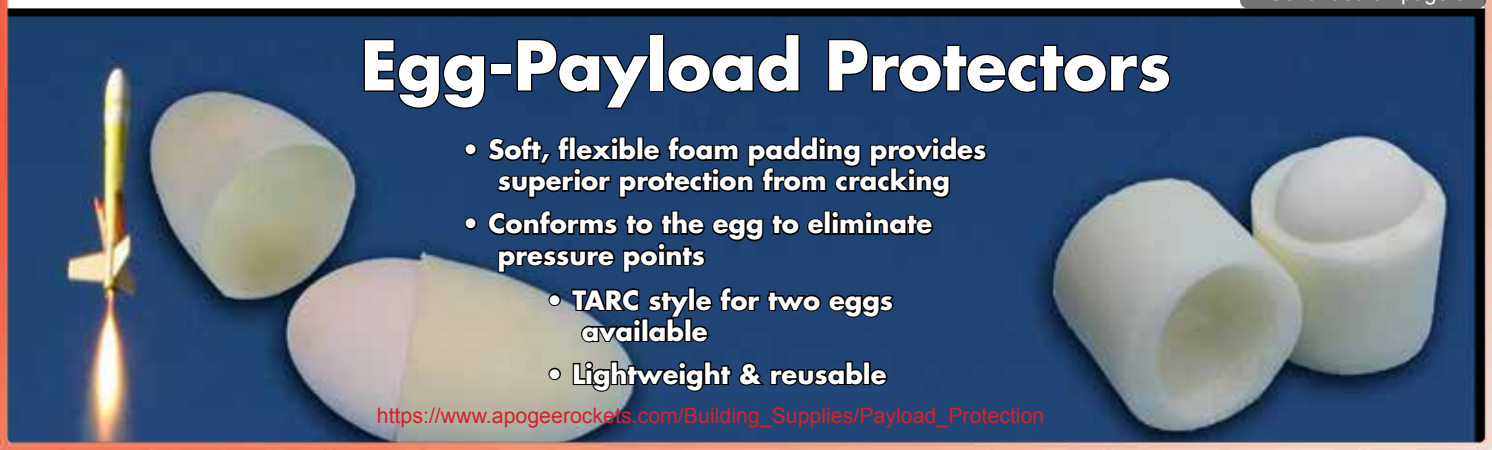

Making Paper Nose Cones: Pt 1

Continued from page 4

cone to fit a BT-101 body tube which is 3.938 inch diameter. For fun, this will be a scale V2 nose cone so the scale factor (65 in/3.938 in) will equal 1:16.506. The scale length of this nose is then 12.632 inch. If we use three segments, the approximated shape (red line) compared to the true ogive curve (black line) is shown in Figure 8. Using four segments produces a closer ogive shape (Figure 9), but for simplicity, this example we will use three.

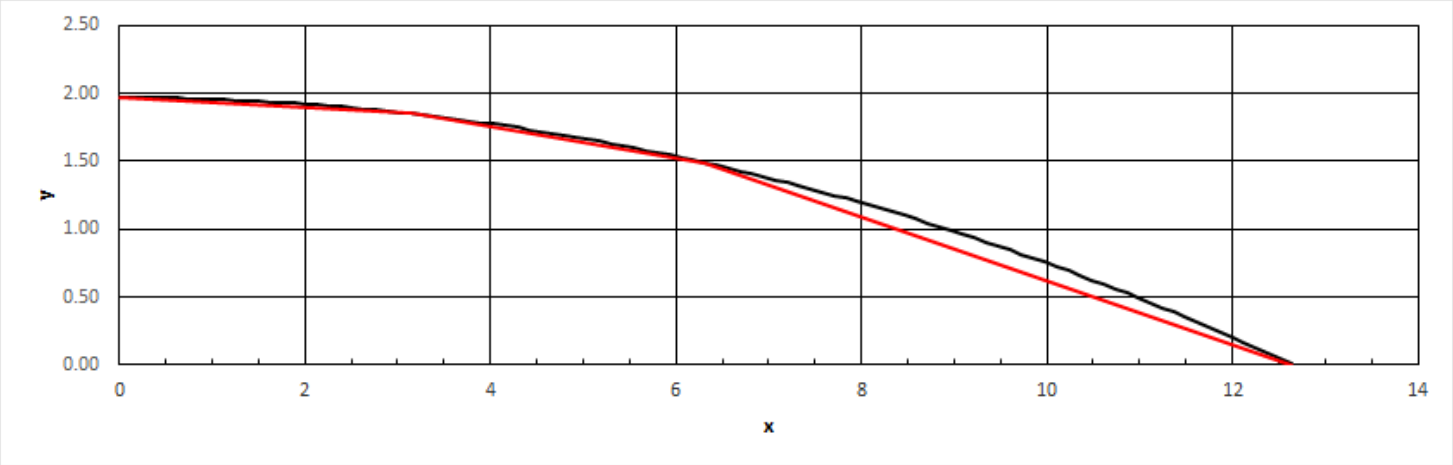

Figure 8

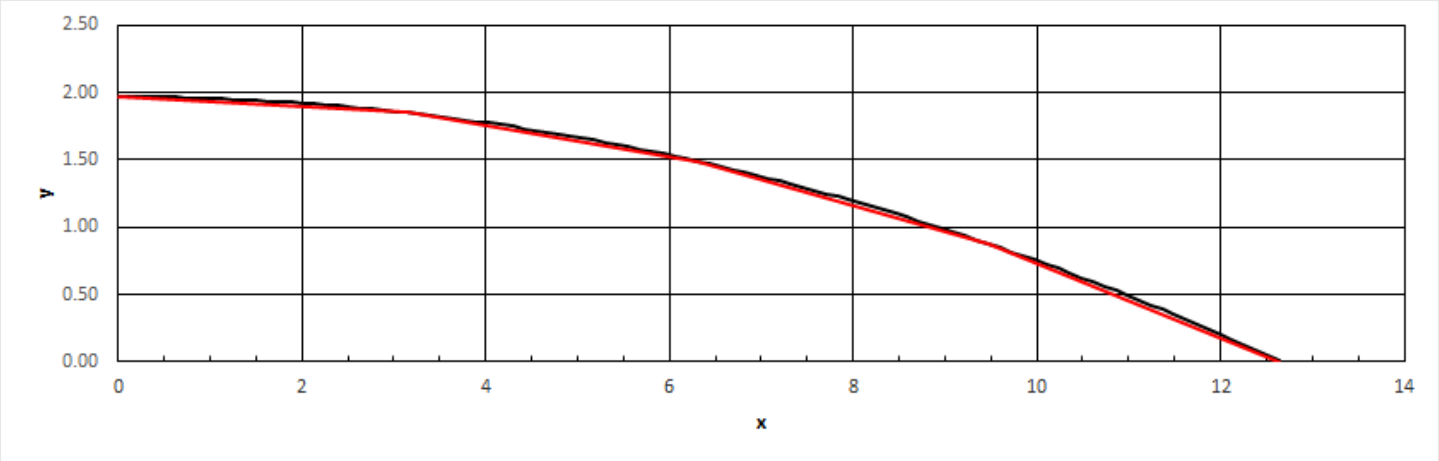

Figure 9

Continued on page 6

CHECK OUT THE APOGEE YouTube PAGE
FOR A VIDEO TUTORIAL ON THE FIGHTER JET CANOPY REVIEWED IN THIS NEWSLETTER OR SUBSCRIBE HERE FOR EVEN MORE HOW-TO VIDEOS ON MODEL ROCKETRY
https://www.youtube.com/watch?v=h0xDKX70tq4
APOGEE COMPONENTS

Making Paper Nose Cones: Pt 1

Continued from page 5

Nose Cone Taper Shrouds

Open up a spreadsheet and start entering the nose cone parameters into the cells (don't include the quote marks!):

1. In cell A1 enter "D". This will label the base (body tube) diameter of the nose cone.
2. In cell B1 enter the diameter. For this example it is 3.938 inch.
3. In cell C1 enter "R". This will label the base radius cell.
4. In cell D1 enter "=B1/2". This is the formula to divide the base diameter by two.
5. In cell A2 enter "t shell". This will label the shroud material thickness cell.
6. In cell B2 enter the material thickness. For this example, 110# cardstock is about 0.005 inch.
7. In cell A3 enter "d". This will label the base diameter minus the total material thickness cell.
8. In cell B3 enter "=B1-2*B2".
9. In cell C3 enter "r". This will label the base radius under the bottom shroud.
10. In cell D3 enter "=B3/2".
11. In cell A4 enter "L". This will label the cell for the total length of the nose cone.
12. In cell B4 enter the length. For this example it is 12.632 inch.
13. In cell C4 enter "C". This will label the cell for the caliber of nose, or the ratio of length to dia.
14. In cell D4 enter "=B4/B1".
15. In cell C5 enter "rho". This labels the cell for the ogive radius, rho.
16. In cell D5 enter "= 1/2*(B4^2+D3^2)/D3". This is the formula for rho.

If you followed the above, your spreadsheet should look like Figure 10.

	A	B	C	D	E
1	D	3.938	R	1.969	
2	t shell	0.005			
3	d	3.928	r	1.964	
4	L	12.632	C	3.208	
5			rho	41.604	

Figure 10

Continued on page 7

Making Paper Nose Cones: Pt 1

Continued from page 6

Now we are going to setup a table to calculate the dimensions for the taper shrouds. I set my table up so the length (x) is a percentage of the total length of the cone so that all I need to worry about is the number of segments, and the total length. The spreadsheet does the work of calculating the intermediate lengths. Also once you have each shroud diameter (top and bottom) and the length, you can calculate the dimensions to draw the pattern on flat paper, and then roll the part into the conical shroud. There is an article in Peak of Flight that covers the math and techniques for making paper shrouds, it is in issue #136 [ApogeeRockets.com/education/downloads/Newsletter136.pdf].

1. In cell A7 enter “Shroud Dimensions”.
2. In cell A8 enter “%L”.
3. In cell B8 enter “x”.
4. In cell C8 enter “y”.
5. In cell D8 enter “Dia”.
6. In cell E8 enter “Shroud length”.
7. In cell A9 enter “0”.
8. In cell B9 enter “=$B$4*A9”. Note in this formula, the use of the $. This locks the cell address so when you copy the formula, it will always point to that cell.
9. In cell C9 enter “= ($D$5^2-B9^2)^(1/2)+$D$1-$D$5”. It is important to keep track of the parentheses and the $ in order to calculate the correct values.
10. In cell D9 enter “=2*C9”.
11. In cells A10, A11, and A12 enter “.25”, “.5”, and “1”.
12. Select cells B9, C9, and D9. Ctrl+C to copy the cells. Select cell B10 through D12 and Ctrl+V to paste into those cells.
13. In cell D12, over type the result with “.06” since the tip shroud will not be a true point, but have a .06 diameter that will be filled-in later.

Continued on page 8

Making Paper Nose Cones: Pt 1

Continued from page 7

14. In cell E10 enter “=B10-B9”. This is calculation the difference between the x values for the first (bottom) shroud.

15. Select cell E10, then copy/paste into cells E11 and E12.

If you followed the above, your spreadsheet should look like Figure 11. Due to round off errors my “y” at length 12.632 came out about 0.005 – I just over typed “0”, but it doesn’t really matter since you are overriding the value with the 0.06 diameter value in cell D12.

C9 = ($D$5^2-B9^2)^(1/2)+$D$1-$D$5

	A	B	C	D	E	F	G	H	I	J
7	Shroud Dimensions									
8	%L	x	y	Dia	Shroud length		R1	R2	theta	
9	0	0.000	1.9690	3.938						
10	0.25	3.158	1.8490	3.698	3.158		48.683	51.844	13.67	
11	0.5	6.316	1.4868	2.974	3.158		13.049	16.228	41.02	
12	1	12.632	0.0000	0.06	6.316		0.133	6.615	80.91	
13										

Figure 11

Again, if you want to manually enter the x coordinates, then you don’t need the values in cells A8 through A12, just enter the locations directly into cells B9 through B12. Also note I enter the formulas to calculate the “flat pattern” dimensions of the shrouds in cells G10 through I12.

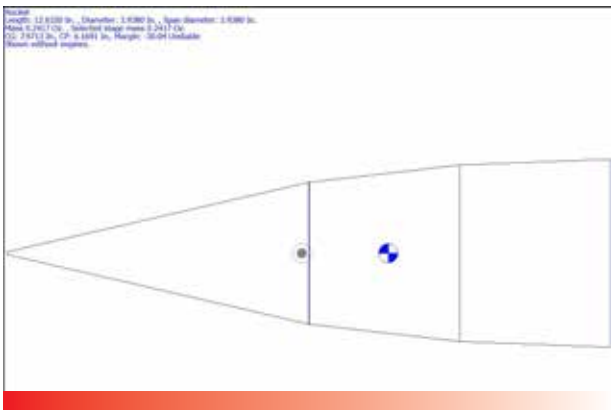

Figure 12

Thanks to RockSim, you don’t really need to lay out the flat patterns! Just open RockSim, add a “Transition”, then enter the two diameters and length. Set the material to paper and the thickness to the value for your material (same as cell B2). Add the other shrouds and you have your cone! Use the “File”…”Print” feature to print out your templates. Figure 12 shows this example cone in RockSim.

If you want to use more than three segments, just add rows to the table, like the four segment example in Figure 13. The RockSim result is shown in Figure 14. This is why I like using percent length for my stations, it makes

C9 = ($D$5^2-B9^2)^(1/2)+$D$1-$D$5

	A	B	C	D	E	F	G	H	I
7	Shroud Dimensions								
8	%L	x	y	Dia	Shroud length		R1	R2	theta
9	0	0.000	1.9690	3.938					
10	0.25	3.158	1.8490	3.698	3.158		48.683	51.844	13.67
11	0.5	6.316	1.4868	2.974	3.158		13.049	16.228	41.02
12	0.75	9.474	0.8760	1.752	3.158		4.613	7.829	68.36
13	1	12.632	0.0000	0.06	3.158		0.116	3.385	93.15
14									

Figure 13

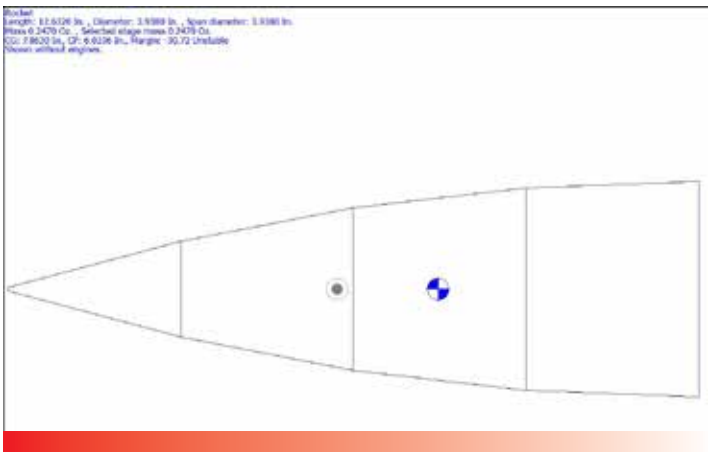

Figure 14

Join The NAR.org
Mention Apogee Components

Continued on page 9

Making Paper Nose Cones: Pt 1

Continued from page 8

the table setup easier. Note the segments don't have to be equal length like I did, playing with different lengths may provide interesting shapes.

Nose Cone Support Rib

As shown in Figure 7, the tapered shrouds are supported by support ribs that can be cut from cardboard or wood. The dimensions of the ribs will be adjusted for the shroud thickness, and an adjustment will be made for the bottom centering ring.

1. In cell A14 enter "t disc".
2. In cell B14 enter the thickness of the bottom centering ring or disc. In this example 0.06 inch.
3. In cell A15 enter "Rib Dimensions".
4. In cell A16 enter "%L".
5. In cell B16 enter "x".
6. In cell C16 enter "y".
7. In cell D16 enter "Dia".
8. In cell E16 enter "Rib length".
9. In cells A17, A18, A19, and A20 enter "0", ".25", ".5", and "1".
10. In cell B17 enter "=$B$4*A9".
11. In cell C17 enter "= ($D$5^2-B17^2)^(1/2)+$D$3-$D$5". Note the use of "r" in cell D3 rather than "R" for y in this set of calculations.
12. In cell D17 enter "=2*C17".
13. Select cells B17, C17, and D17. Ctrl+C to copy the cells. Select cell B18 through D20 and Ctrl+V to paste into those cells.
14. In cell C20, over type the result with "0" in case round off error produces a non-zero value.
15. In cell E18 enter "=B18-B17-B14". This is calculates the first position less the thickness of the bottom disc.
16. In cell E19 enter "=B19-B18".
17. Select cell E19, then copy/paste into cells E20.

If you followed the above, your spreadsheet should now look like Figure 15. Take the diameter dimensions from column D and the length dimensions from column E to create two rib support pieces, one is slotted half-way from the base, the other slotted half-way from the tip.

C17 = ($D$5^2-B17^2)^(1/2)+$D$3-$D$5

	A	B	C	D	E	F	G	H
14	t disc	0.06						
15	Rib Dimensions							
16	%L	x	y	Dia	Rib Length			
17	0	0.000	1.9640	3.928				
18	0.25	3.158	1.8440	3.688	3.098			
19	0.5	6.316	1.4818	2.964	3.158			
20	1	12.632	0.0000	0.000	6.316			
21								

Figure 15

Continued on page 10

Making Paper Nose Cones: Pt 1

Continued from page 9

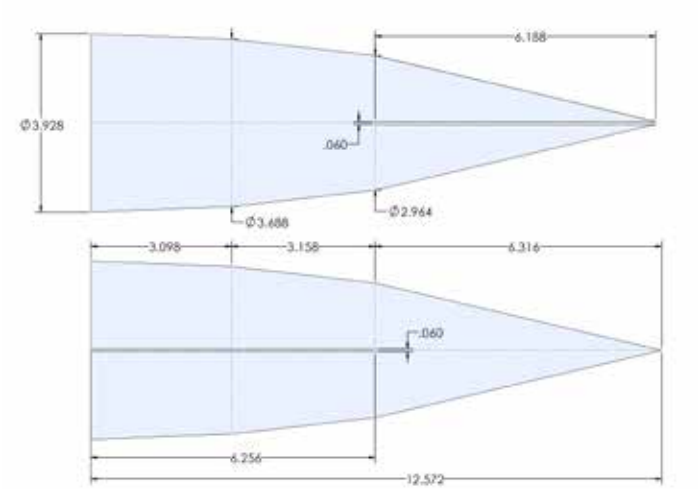

Figure 16

A CAD program really helps drawing these parts but if you don't have a CAD program, and your drafting skills are rusty, have no fear, RockSim comes to the rescue again! The points from the spreadsheet can be entered using the points input screen for a custom fin set. You will use the radial height "y" from column C. You will need to calculate a set of x coordinates so than the tip of the rib is at 0 and the base will be at length L. For example, in cell G20 enter "=$B$20-B20", then copy/paste this into cells G19 to G17. These will be the "x" values in RockSim. Figure 17 shows the result in RockSim. Print this template out and remember you will have to double it to create the complete rib. Note for this template, it does not matter what body tube you pick for the rocket, since the "root" of this "fin" is the centerline of the rib.

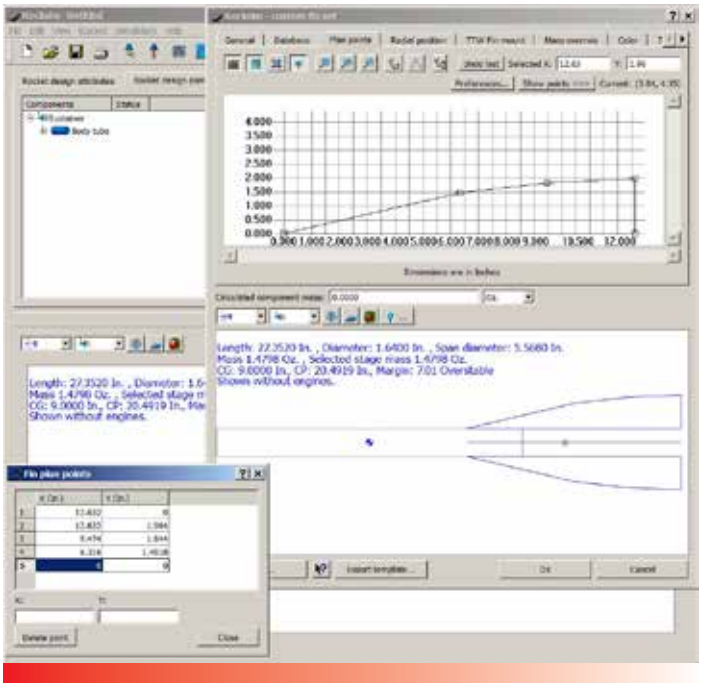

Figure 17

Tail Cone (Boattail)

A tail cone is built in a manner very similar to a nose cone. Since it is a truncated (chopped-off) ogive cone, a little more math is required to create the ogive curve because you need to find the total length of the whole cone. Knowing the base diameter, the diameter of the small end, and the length of the tail cone, you can use some algebra with equations 1 and 2a to solve for L (I am calling it LTotal so it won't be confused with the tail cone length):

Where R1 is the base radius (1/2 base diameter), R2 is radius of small end, and LB is length of the tail cone.

$$L_{Total} = \frac{\sqrt{(R1 - R2) \times R1 \times (R2^2 + L_B{}^2 - R2 \times R1)}}{R1 - R2}$$

Continued on page 11

www.apogeerockets.com/RockSim/RockSim_Information

Making Paper Nose Cones: Pt 1

Continued from page 10

Tail Cone Taper Shrouds

If your spreadsheet is open, you can add a new worksheet (or open up another spreadsheet) and start entering the tail cone parameters into the cells (don't include the quote marks!):

1. In cell A1 enter "D1". This will label the base (body tube) diameter of the tail cone.
2. In cell B1 enter the diameter. For this example it is 3.938 inch.
3. In cell C1 enter "R1". This will label the base radius cell.
4. In cell D1 enter "=B1/2". This is the formula to divide the base diameter by two.
5. In cell A2 enter "t shell". This will label the shroud material thickness cell.
6. In cell B2 enter the material thickness. For this example, 110# cardstock is about 0.005 inch.
7. In cell A3 enter "d1". This will label the base diameter minus the total material thickness cell.
8. In cell B3 enter "=B1-2*B2".
9. In cell C3 enter "r1". This will label the base radius under the bottom shroud.
10. In cell D3 enter "=B3/2".
11. In cell A4 enter "tc len". This will label the cell for the length of the tail cone.
12. In cell B4 enter the length. For this example it is 8.767 inch.
13. In cell A5 enter "btm dia". This is the diameter of the small end of the tail cone.
14. In cell B5 enter the small diameter. For this example it is 2.478 inch.
15. In cell C5 enter "R2". This will label the small end radius.
16. In cell D5 enter "=B5/2"
17. In cell A6 enter "total len". This will label the cell for the total ogive length.
18. In cell B6 enter "=(($D$1-(D5))*$D$1*((D5)^2+B4^2-(D5)*$D$1))^(1/2)/($D$1-(D5))"
19. In cell C6 enter "C". This will label the cell for the caliber of total ogive, or the ratio of len to dia.
20. In cell D6 enter "=B6/B3".
21. In cell C7 enter "rho". This labels the cell for the ogive radius, rho.
22. In cell D7 enter "= 1/2*(B6^2+D3^2)/D3". This is the formula for rho.

If you followed the above, your spreadsheet should look like Figure 18 below.

B6 =(($D$1-(D5))*$D$1*((D5)^2+B4^2-(D5)*$D$1))^(1/2)/($D$1-(D5))

	A	B	C	D	E	F	G	H	I
1	D1	3.938	R1	1.969					
2	t shell	0.005							
3	d1	3.928	r1	1.964					
4	tc len	8.767							
5	btm dia	2.478	R2	1.239					
6	total len	14.313	C	3.644					
7			rho	53.139					

Figure 18

Continued on page 12

Making Paper Nose Cones: Pt 1

Continued from page 11

1. In cell A9 enter “Shroud Dimensions”.
2. In cell A10 enter “%L”.
3. In cell B10 enter “x”.
4. In cell C10 enter “y”.
5. In cell D10 enter “Dia”.
6. In cell E10 enter “Shroud length”.
7. In cell A11 enter “0”.
8. In cell B11 enter “=$B$4*A11”.
9. In cell C11 enter “= ($D$7^2-B11^2)^(1/2)+$D$1-$D$7”.
10. In cell D11 enter “=2*C11”.
11. In cells A12, A13, and A14 enter “.25”, “.5”, and “1”.
12. Select cells B11, C11, and D11. Ctrl+C to copy the cells. Select cell B12 through D14 and Ctrl+V to paste into those cells.
13. In cell E12 enter “=B12-B11”. This is calculation the difference between the x values for the first (bottom) shroud.
14. Select cell E12, then copy/paste into cells E13 and E14.

If you followed the above, your spreadsheet should look like Figure 19 below. Again, I entered the formulas for the shroud flat patterns in cells H12 through J14. If you want to use more than three segments, just add rows to the table.

H12 =SQRT((D12/2)^2+(E12*D12/(D11-D12))^2)

	A	B	C	D	E	F	G	H	I	J	K
9	Shroud Dimensions										
10	%L	x	y	Dia	Shroud length			R1	R2	theta	
11	0	0.000	1.9690	3.938							
12	0.25	2.192	1.9238	3.848	2.192			93.264	95.456	7.43	
13	0.5	4.384	1.7879	3.576	2.192			28.892	31.088	22.28	
14	1	8.767	1.2408	2.482	4.384			8.060	12.496	55.42	

Figure 19

Continued on page 13

Making Paper Nose Cones: Pt 1

Continued from page 12

Tail Cone Support Rib

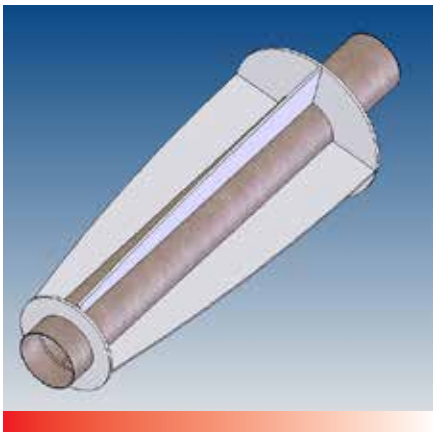

Figure 20

The internal support structure of the tail cone varies from the nose cone since the engine tube will form the center, and the ribs will be like fins (Figure 20). Note that this type of construction could be adapted to the nose, using a standard commercial nose cone as a tip.

1. In cell A16 enter “eng tube dia”.
2. In cell B16 enter the outside diameter of the engine mount tube. In this example 1.210 inch.
3. In cell A17 enter “t disc”.
4. In cell B17 enter the thickness of the bottom centering ring or disc. In this example 0.06 inch.
5. In cell A18 enter “Rib Dimensions”.
6. In cell A19 enter “%L”.
7. In cell B19 enter “x”.
8. In cell C19 enter “y”.
9. In cell D19 enter “Dia”.
10. In cell E19 enter “Rib length”.
11. In cell F19 enter “Rib Height”.
12. In cells A20, A21, A22, and A23 enter “0”, “.25”, “.5”, and “1”.
13. In cell B20 enter “=A20*$B$4”.
14. In cell C20 enter “= ($D$7^2-B20^2)^(1/2)+$D$3-$D$7”.
15. In cell D20 enter “=2*C20”.
16. Select cells B20, C20, and D20. Ctrl+C to copy the cells. Select cell B21 through D23 and Ctrl+V to paste into those cells.
17. In cell E21 enter “=B21-B20-B17”. This is calculates the first position less the thickness of the bottom disc.
18. In cell E22 enter “=B22-B21”.
19. Select cell E22, then copy/paste into cells E23.
20. In cell F20 enter “=C20-$B$16/2”. This is the rib height above the tube.
21. Select cells F20. Ctrl+C to copy the cell. Select cell F21 through F23 and Ctrl+V to paste into those cells.

Your spreadsheet should resemble Figure 21 on the next page. Use the height and length values to draw the support rib.

Continued on page 14

Making Paper Nose Cones: Pt 1

Continued from page 13

F20 =C20-$B$16/2

	A	B	C	D	E	F	G
16	eng tube dia	1.210					
17	t disc	0.06					
18	Rib Dimensions						
19	%L	x	y	Dia	Rib Length	Rib Height	
20	0	0.000	1.9640	3.928		1.359	
21	0.25	2.192	1.9188	3.838	2.132	1.314	
22	0.5	4.384	1.7829	3.566	2.192	1.178	
23	1	8.767	1.2358	2.472	4.384	0.631	

Figure 21

These values can be entered into RockSim as a custom fin set. The values in column B will be the "x" dimensions, and the "y" values will be in column F. You will also need to add a "0,0" point and a point at "LB,0". Figure 22 (next page) shows the result in RockSim.

Note for the tail cone template, you need to use the correct body tube diameter, since the height calculated for the coordinates take the body tube's outside diameter into account.

Continued on page 15

Making Paper Nose Cones: Pt 1

Continued from page 14

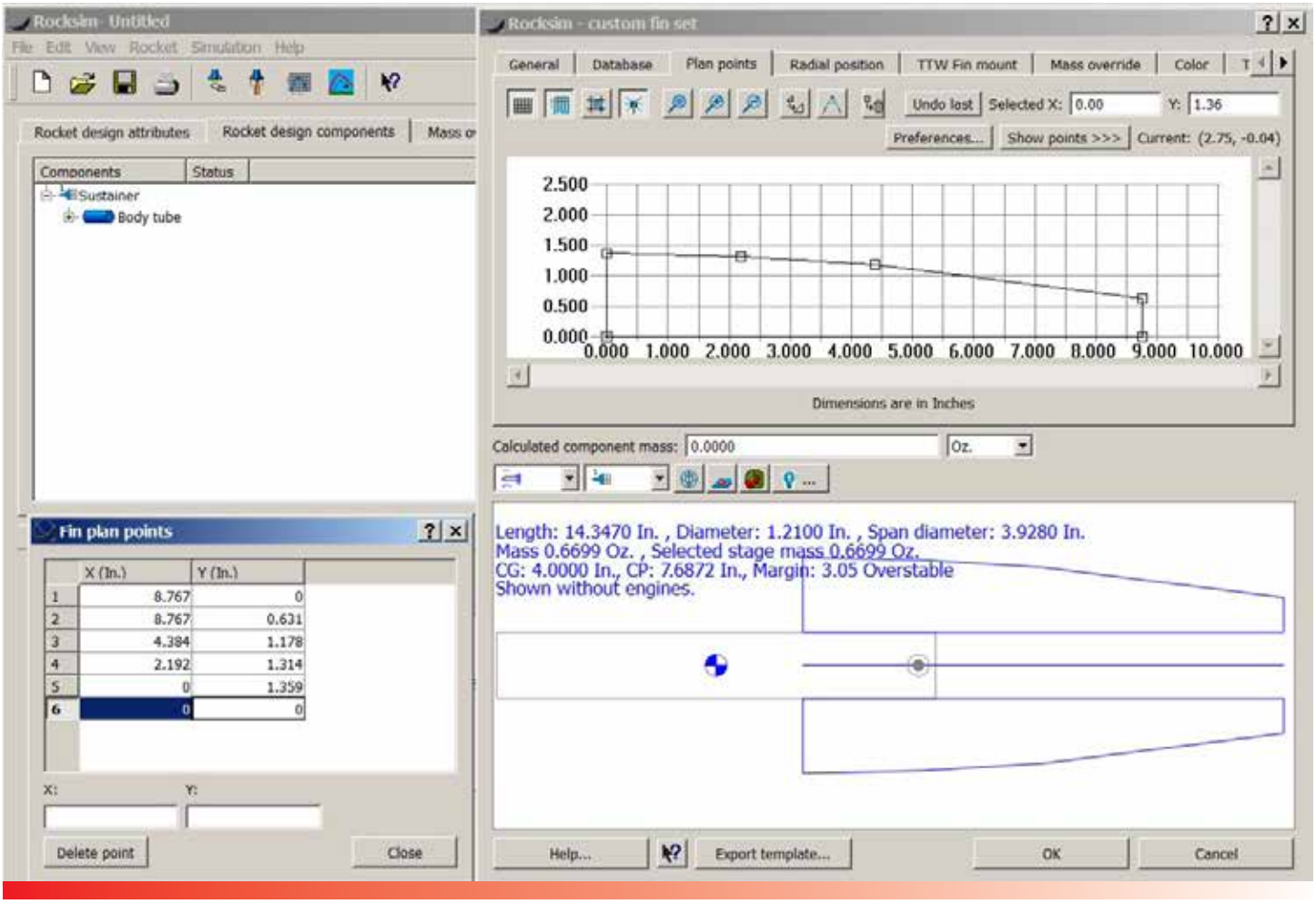

Figure 22

In the next Peak of Flight issue, #410, David goes over construction of the nose cone and tail cone using the templates generated here.

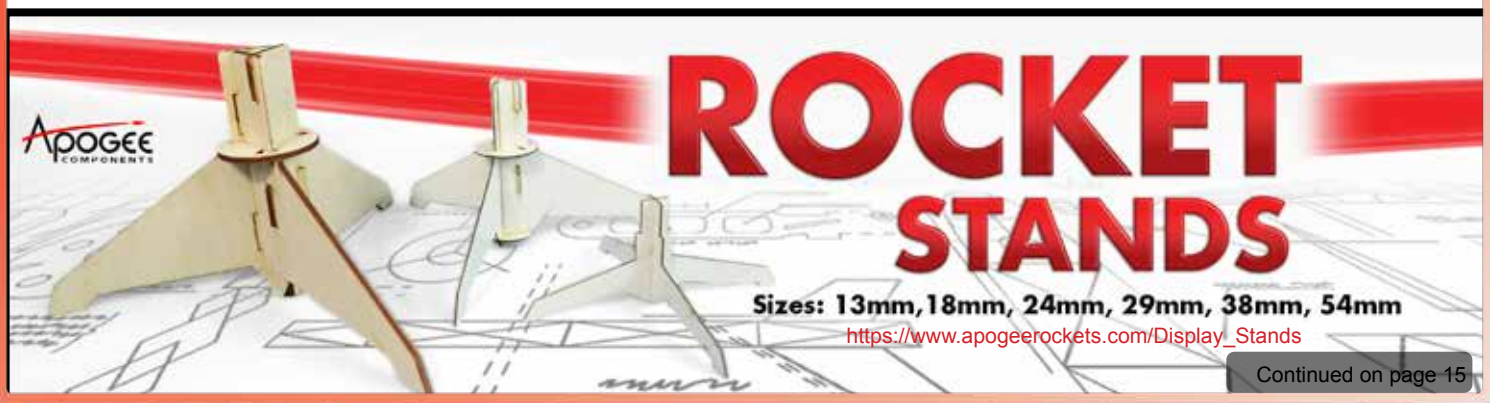

Continued on page 15