PEAK OF FLIGHT NEWSLETTER

ISSUE 461 | January 23rd, 2018

IN THIS ISSUE

Rocket Design Inspiration

www.ApogeeRockets.com/Rocket_Kits/Skill_Level_3_Kits/Jay_Hawk_AQM-37A

Apogee Components, Inc.
Your Source For Rocket Supplies That Will Take You To The "Peak-of-Flight"
3355 Fillmore Ridge Heights Colorado Springs, Colorado 80907-9024 USA
www.ApogeeRockets.com e-mail: orders@apogeerockets.com Phone: 719-535-9335 Fax: 719-534-9050

Rocket Design Inspiration

By John Boren

On numerous occasions, I've been asked how I come up with my designs for Estes. There is no simple answer for this but like many people, I have a vivid imagination and an inner desire to design stuff. I started building model rockets and model airplanes when I was in second grade. Although I built mainly kits in the early years, by the time I was a teenager my focus switched to creating my own designs, and so that inner desire to design has been with me most of my life. At Estes, I've been very lucky to be their only designer for these past seven years, although Mike Zaboroski, a former employee of Hobbico, did design both the Rogue Voyager and the prototype of the Astron Sprint XL.

For me, the actual design process may start in many ways. Sometimes there is a need for a new kit to fill a void in the Estes line. This need could be a model that uses a certain size motors, or it could be a Skill Level requirement. Other times it may be for the need to use up a certain body tube that we have an excess of. Yet other times a desire to bring back an old kit comes to light and if it uses an excess body tube, better yet. By far my most enjoyable design adventures take place when I'm all caught up with needed work items and I've got free time to just think about what I want to design next. Designs like the Quinstar and Estes Shuttle come to life when I'm allowed time to think about something out of the box and hopefully, it's something cool that others will want to own and build.

Let's start with the need to design something for a specific motor impulse size. The design task for this is relatively easy since there is only one requirement to fulfill. First, I look at what sizes and quantities of body tubes we have an excess of in China since this will be the quickest way to get a kit to market. Once a few different tubes are selected I simply start sketching on paper a few different design possibilities. Once something strikes me as looking cool I fire up Auto Cad and begin to draw the parts as a solid model and I start with the body tube sizes and lengths.

I add a nose cone and then proceed to the fins. For fins, I only have three thicknesses of balsa and two sheet size dimensions based on the thickness of the wood to choose from. For a D or E powered models the wood thickness is most likely going to be either 3/32" or 1/8" thick which gives me a 4" x 12" area to lay out all my fins on. To keep costs down I always try to use the least amount of materials possible. So, if a single sheet of balsa can be used, great, if not, then I'll try it on a sheet and a half. Many times, the final shape and size of the fins comes down to how they fit on the balsa sheet. With the fin shape finalized I will proceed to add it to the rest of the CAD model.

Now I will rotate the model on the screen to see how it looks from every angle. This is when you discover that things don't look right. The fin shape or size could be off, or the body length may not appear to be correct. Then I'll do a quick check to see what other tubes might be available and so I will add them to the CAD file until I come up with something that looks better. Many times, I don't like what I see and I start all over. As I design the model I try to make sure it will be stable by just utilizing my experience. I don't use rocket software for the design part of my creation process, but I do use RockSim on the completed design to determine how much nose-weight is needed if any for the model. My goal is to make sure that the design has a stability margin of 1.5 or better. This is why some designs have clay in the nose when in reality they may not need any. I believe that it is always better to be safe than sorry.

Continued on page 3

About this Newsletter

You can subscribe to receive this e-zine FREE at the Apogee Components website **www.ApogeeComponents.com**, or by clicking the link here Newsletter Sign-Up

Newsletter Staff

Writer: John Boren
Layout/Cover Artist: Chris Duran
Proofreader: Will Franks

Rocket Design Inspiration

Continued from page 2

Almost every nonscale rocket design starts off with what excess body tubes we have available. It's very rare to come out with a kit that doesn't use an excess body tube or a tube of standard length. The fun designs use lots of excess body tubes.

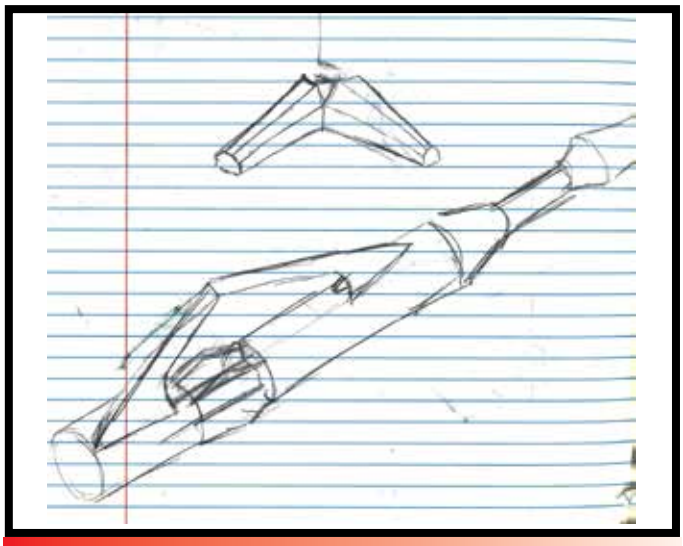

Figure 1: Black Star Voyager Sketch.

My favorite Sci-Fi design I've done for Estes is the Black Star Voyager. The entire design was based on using several short BT-60 body tubes. The more BT-60 tubes I could use the better. I ended up with three short tubes, a long HD-1000 tube going down the center of the lower model, and an upper BT-55 tube all of which were on our excess body tube list. Even the nine 1/8" square hardwood sticks were on our excess list of materials.

The main unique feature of the Black Star Voyager is the open and V-shaped section of the fins. I wanted something to connect the lower and middle section of the model together and a huge, solid fin was out of the question. I also like doing stuff that I've not seen done before so I decided to give the fins a V-cross section. It would give them a lot of strength since I wanted to use 1/16" thick balsa and they simply looked cool. I knew I wanted to space those short sections of BT-60 tubes apart from each other so I

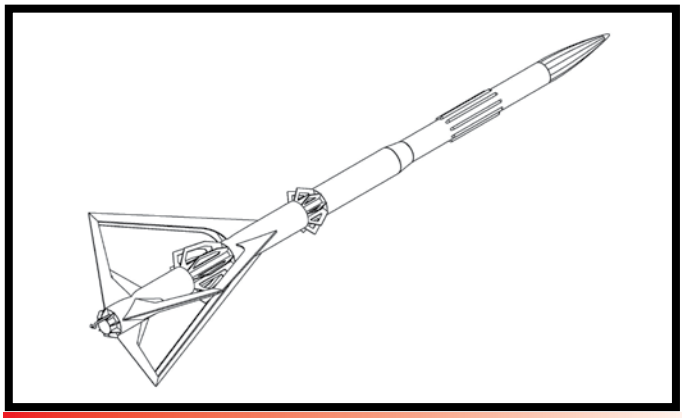

Figure 2: Black Star Voyager CAD Drawing.

decided to fill in the gaps with my other favorite sheet material: cardstock. Since the fins had an open structure I followed this design into the cardstock parts so their centers were opened as well. I tend to add elements to a design in similar ratios of parts. For instance, if I start off with three fins, I will then add three, six or nine of something else to the model.

The cardstock parts ended up being nine pieces since six didn't look right. The 1/8" square sticks at the top of the model came out to nine and since I just happened to have a new twelve-sided injection molded plastic nose cone, I added it to the top, not to mention it would be heavier than a blow molded cone and I figured I would need the nose weight. You'll notice in the sketch I used to create the Black Star Voyager that It's simple, basic, and doesn't include all the design elements that ended up being in the model (**Figure 1**). In fact, many times I start out with just a single item for a design and build upon it. In **Figure 2** is what the Black Star Voyager ended up looking like. Possibly the worst part of any model build is what color I make it and what decals, if any, need to be added to it.

Continued on page 4

Rocket Design Inspiration

Continued from page 3

The more colors used on the decals raises the cost, which means the more the kit will cost to the customer. The more painted colors you use on the model and the more difficult the pattern is the greater the chance the modeler won't use the deco you've chosen for the kit. As a modeler growing up I always loved the color scheme of the Star Ship Nova, overall black with simple white and orange decals that really set the model apart from most other Sci-Fi designs of the day. For me, there was one and only one way to go on this model and the very first deco I used is what ended up in the kit.

Sci-Fi models are fun to design since they typically end up being higher skill level models. There are several ways to produce a higher skill level kit.

1. Use lots of parts.
2. Have the modeler cut their own tubes into various shapes.
3. Use different types of materials along with sheet balsa and body tubes.
4. Use cardstock and index stock, which is thick paper, wood dowels, and plastic parts.
5. Use many different building materials and different methods of construction.

Sometimes it takes just one small thing to get the design juices flowing, like the shape of a nose cone. The wedge-shaped cone used on the now classic model, the Manta Bomber, is very different from your standard Ogive and simply cool looking to me.

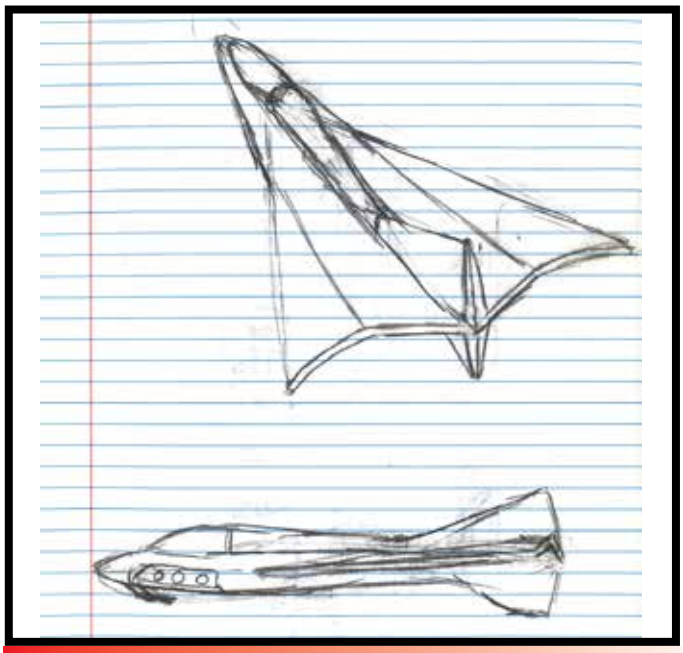

Figure 3: Manta Foam Glider Sketch.

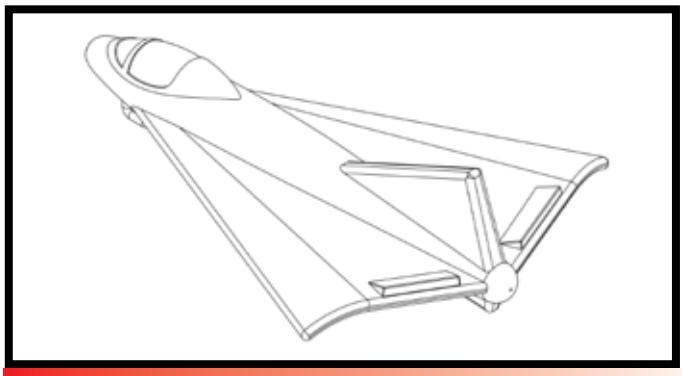

Figure 4: Manta Foam Glider CAD Drawing.

Continued on page 5

Rocket Design Inspiration

Continued from page 4

The entire design of the Asteroid Hunter (**Figures 5-6**) was based on the shape of the nose cone from the Manta Bomber. The tooling for the cone didn't exist at that time but I just happened to have the part lying around at Estes. Once I completed the design and showed the model to the marketing department, it was an easy sell to get the money for tooling a new cone. I ended up with a different cone to which I added a lot more detail. Designing and building model airplanes is my main hobby, so I try to carry over some of this type of building to Estes kits whenever I get the chance.

The Asteroid Hunter is built much like a model airplane is built, with formers and stringers which are then covered with index card stock. Standard balsa fins are added to this angular shaped body with the result being a model that isn't a simple round body tube with fins on it. It may not be the slickest looking Sci-Fi model out there, but it's different and that's what I try to do with most of my designs.

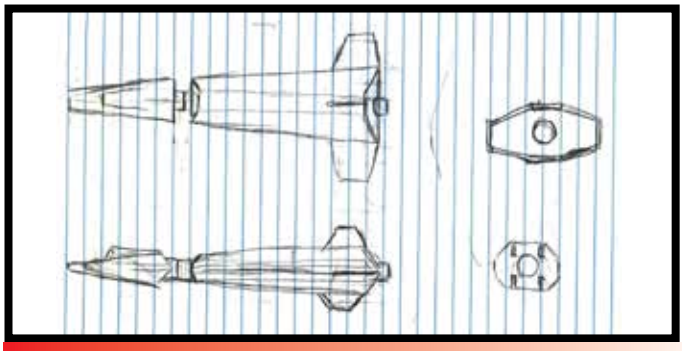

Figure 5: Asteroid Hunter Sketch.

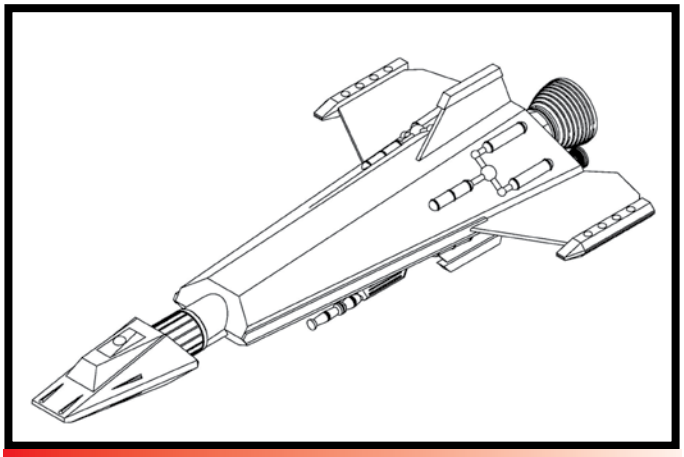

Figure 6: Asteroid Hunter CAD Drawing.

All the diehard rocketeers out there and born-again modelers want to see old classics return. Estes didn't hire me to bring back designs from the past but being a modeler myself I do like the oldies. Since I had to raise the money to purchase all my own modeling supplies and kits there were lots of models I wanted but couldn't afford. Fortunately, Estes pays for me to relive my youth, so I do take advantage of it but in a professional manner. I figure if I like something there must be others who like it to, so I build one. The marketing department looks at it and if they like it, we proceed to figure out what the cost is going to be before going any further. For me personally, bring-backs are more challenging to do than most rockets since you not only have to gather up as much old information about the design as possible (which may not exist), but when you do, you need to determine if it's correct.

Continued on page 6

Rocket Design Inspiration

Continued from page 5

I do my best to recreate the oldies as accurate as I can.

Hopefully, the tool to create the blow molded cone still exists, if not I ask if funds are available to create a new tool. The correct fin shape is next. Sometimes it's very difficult to find a drawing of the fin I need. Most of the oldies weren't designed in Auto Cad, so I have to look through hundreds of Mylar drawings and even then, I may not find what I need. Next, I'll look for old kits or parts of kits to find an original fin set and then, of course, you need an original set of decals. Recreating a set of decals can be very time consuming. However, the decal is usually going to be a lot cleaner than the original was since they didn't have fancy computers to draw with or make master images with. Also, there were never two matching decals on a sheet back then, today they match perfectly. As for reproducing the original colors exactly as they were back in the day, we try to come as close as we can.

Designing new scale models is another favorite thing of mine to do since I find it much easier to do then recreating a classic scale model. Not only do you have all the issues of your typical bring back, but now it's a scale bring-back that has to be recreated as close to what the actual real-life design was originally. This simply means that there are a lot more details that must be accurate with the final kit.

I also must be aware that the needed tooling may or may not exist. Sometimes with partial tooling, I need to recreate small plastic parts from hand-drawn blueprints (if/when available) that most likely don't have all the information needed to recreate the completed parts with. So, for me, give me a never before done scale model and I'm in heaven, especially if I know I have plenty of money for tooling.

I've never tooled parts without first making them in our rapid prototype machine. Then I test-fit it to make sure the parts fit correctly, I also need to test fly the models. So growing a Maxi Brute size Honest John with molded plastic fins and a tail cone is a must. The huge nose cone with molded-in spin rockets is also something needed. Not only do I use actual flyable parts, I get parts that are close in weight to what the molded parts will weigh in order to make flight testing much more reliable.

Not only have I had the pleasure to design rocket kits but I've had the opportunity to design a couple new launch controllers plus a couple new launch pads. Not everything makes it to market, but that's okay since I still got to build at least one prototype of the design and who knows? One day there may be a renewed need to produce the product.

Continued on page 7

Star Lift Mega Lander

Build It - Launch It - Stick The Landing

The Excitement Builds All The Way To Touchdown

- Large Size Rocket Flies on the Impressive Mid-Power Motors.
- Articulating Lander Legs Fold Up During Launch.
- Laser Cut Plywood Parts for a Strong Rocket.
- Pre-Slotted Tube Makes Construction Easier.
- Vinyl Decal for Visual Appeal.

www.ApogeeRockets.com/Rocket_Kits/Skill_Level_5_Kits/Star_Lift_Mega_Lander

Rocket Design Inspiration

Continued from page 6

The design of the Tube Cutting Guides evolved into a product from a personal need (**Figures 7-8**).

I cut lots of tubes at work since I don't have an endless supply of every tube length at my disposal. I simply cut tubes the needed length as required for what I am building at that time. I knew there had to be a better way than simply wrapping a piece of paper around a tube several times to get something for my hobby blade to follow. Have you ever came up with an idea for something when you weren't planning on it? Well, it happens to me all the time. It literally took months to figure out what I needed to do. The design process went something like this: Spend two hours thinking about it and come up with nothing. Wait a month, then try thinking about it again. Then wait another month or two and then

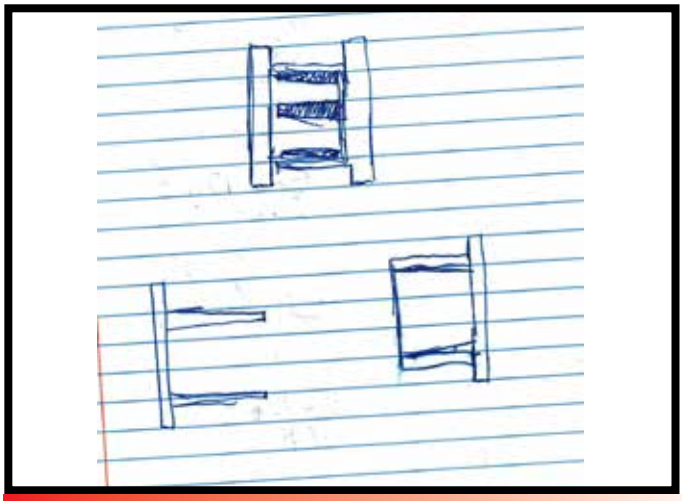

Figure 7: Tube Cutting Guide Sketch.

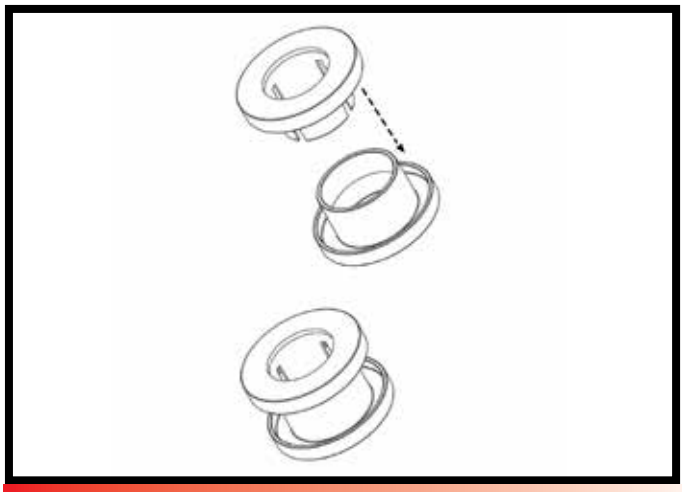

Figure 8: Tube Cutting Guide CAD Drawing.

bam! One day while I was laying in bed it came to me. I pulled out my sketchbook and I proceeded to make a little doodle of my idea. The next day at work I drew up the part in Auto Cad, grew the part in our rapid prototype machine, made a few minor changes and then proceeded to create the entire line of tube cutting guide sizes over the next couple days.

A similar thing happened when my boss asked me to come up with some new motor adapters. I didn't want to do the same old thing that's been done before so I tried to give it some extra thought on the design but nothing came of it.

Continued on page 8

Rocket Design Inspiration

Continued from page 7

Then several months went by and I'm asked again to come up with a design but I still didn't have a concrete idea. Finally, I figured it out while on my sixteen minute drive to work. When I arrived I spent a few hours on Auto Cad, then parts were created overnight in the rapid prototype machine and I began testing the new plastic motor adapters the very next day. So the design finally came together quickly and hopefully these adapters will be in the Estes line for many years to come.

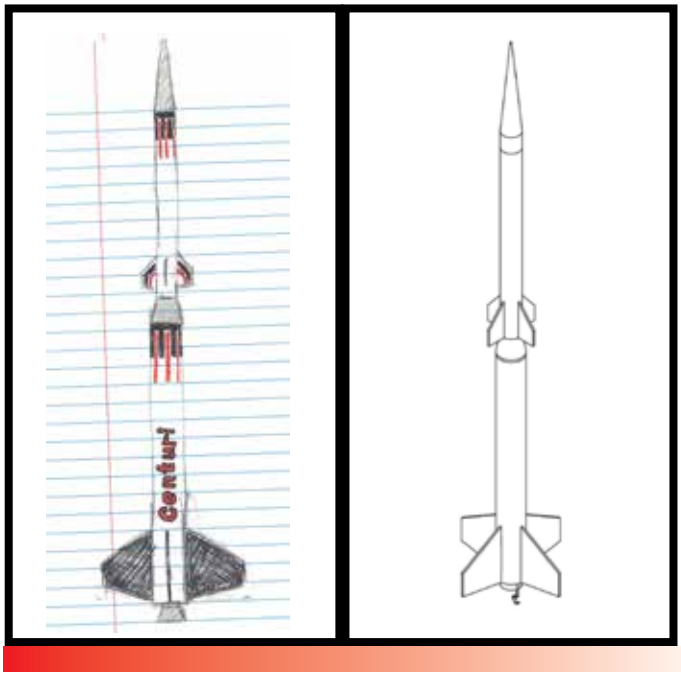

Figure 9: Centuri Sketch & CAD Drawing

Here are some other things I've learned as the designer of Estes rocket kits over these past years:

1. Three years is the average life of a typical kit, so don't feel bad when it gets discontinued.
2. Not everyone is going to like everything you create.
3. The actual deco of the model will in most cases not be the deco the modeler uses, so don't feel bad when such a model shows up at the field.
4. Something you know is super cool and is going to sell great sometimes doesn't.
5. The Alpha and Big Bertha kits will most likely still be being sold long after I'm gone.

I was once asked how many different designers were currently working at Estes and I replied it was just me. I don't remember the exact phrasing of his reply but it was something like, "I would have thought there were several because of the wide variety of models being produced." I took that as a great compliment.

What would give me the greatest pleasure for my years working here is; I would like to think thirty years from now a parent sitting with their kid would one day say, "Man, that rocket was a classic when I was growing up".

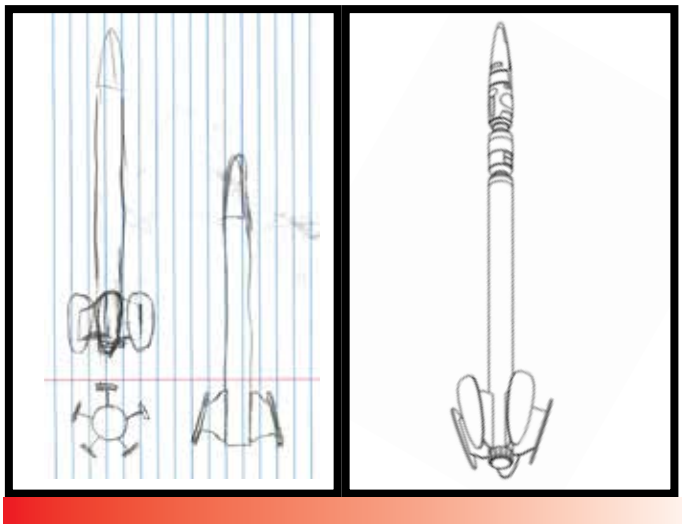

Figure 10: Dark Energy Sketch & CAD Drawing.

Rocket Design Inspiration

Continued from page 8

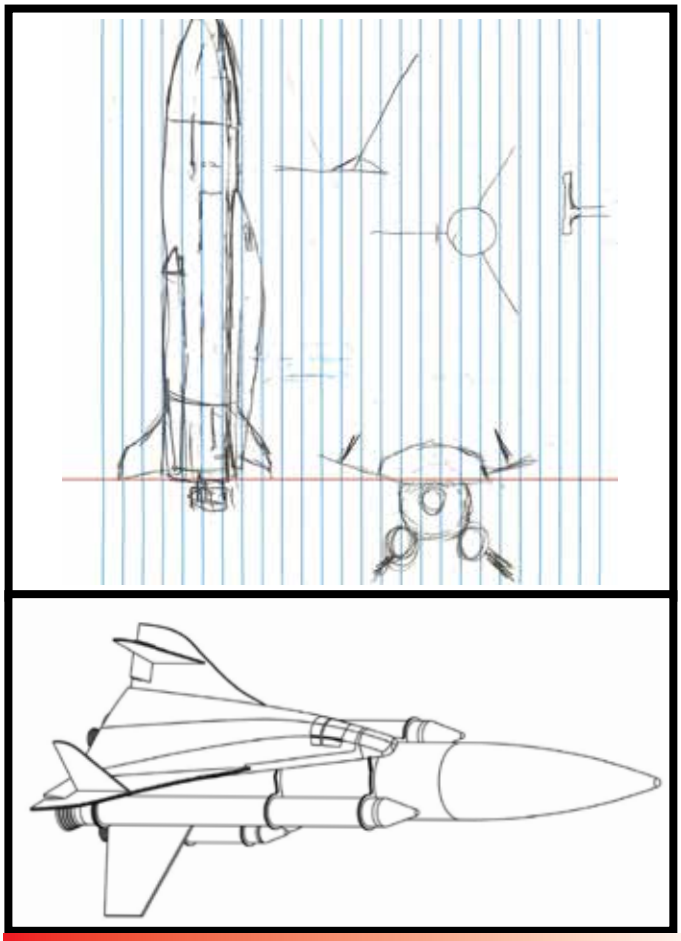

Figure 11: Estes Shuttle Sketch & CAD Drawing.

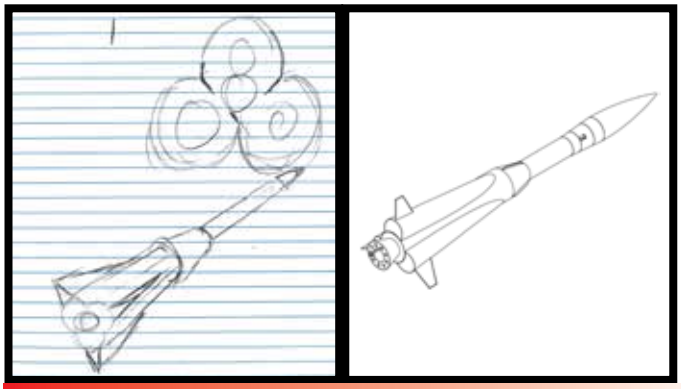

Figure 12: Expedition Sketch & CAD Drawing

Check out our Facebook page
www.facebook.com/ApogeeRockets

About The Author:

I started building my first stick and tissue model airplanes and model rockets at the age of seven years old. Forty-seven years later, I am still actively building both RC airplanes and model rockets. I flew J & K high powered models as a member of Tripoli before NAR began their certification process. I currently have a Level 1 NAR certification. I worked for Midwest Products for a couple years, and during that time I designed the last three wood boat kits in their kit line. For the past eight years, I have been working at the Estes model rocket company as their sole designer of rocket kits and accessories. I have built hundreds of models while working at Estes and have produced about a hundred models that have been used in trade shows and sale exhibits. http://www.johnboren.com/

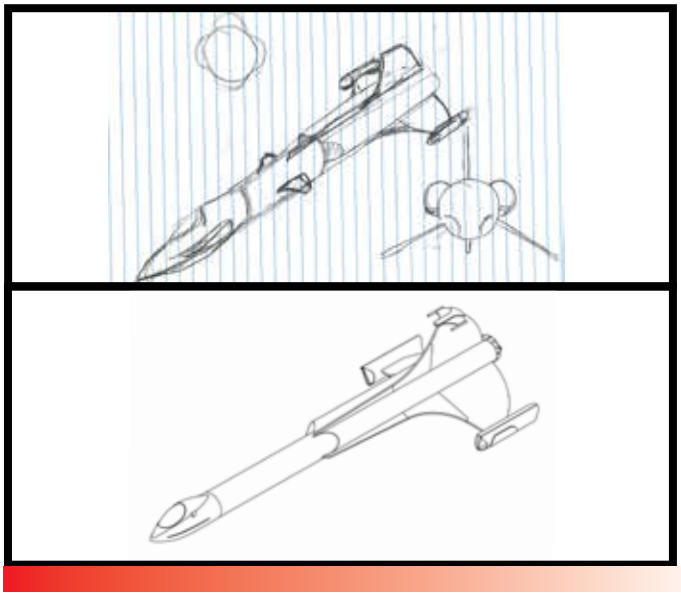

Figure 13: Xarconian Sketch & CAD Drawing.

Figure 14: Author John Boren prepping a rocket for launch.