PEAK OF FLIGHT

NEWSLETTER

ISSUE 489 | February 19th, 2019

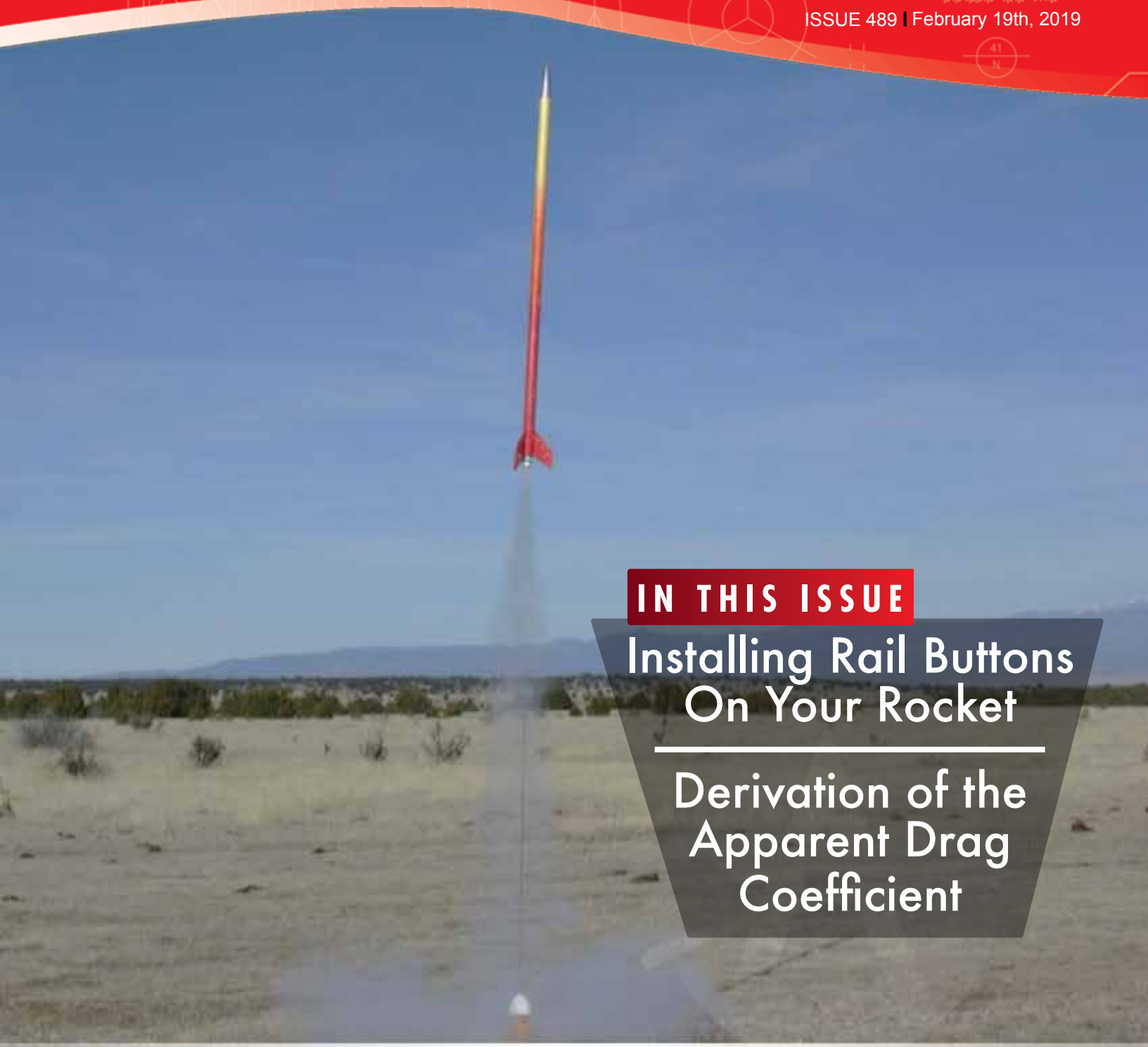

IN THIS ISSUE

Installing Rail Buttons On Your Rocket

Derivation of the Apparent Drag Coefficient

www.ApogeeRockets.com/Rocket-Kits/Skill-Level-2-Model-Rocket-Kits/NeMSAR

Apogee Components, Inc.
Your Source For Rocket Supplies That Will Take You To The "Peak-of-Flight"
4960 Northpark Drive Colorado Springs, Colorado 80918 USA
www.ApogeeRockets.com e-mail: orders@apogeerockets.com Phone: 719-535-9335 Fax: 719-534-9050

APOGEE COMPONENTS

Installing Rail Buttons On Your Rocket

By Tim Van Milligan

A common question we get is how to install a rail button on a rocket. The answer is that there are probably dozens of ways, but I suppose the underlying question you have here is, what is the simplest and quickest way?

In a perfect world, you have to think about the rail buttons like you do about the fins of the rocket. By that I mean you have to plan ahead and think about them before you do the actual construction of the rocket. If you are considering the fins, what comes to mind is how to make them super strong so they don't pop off easily. Applying this philosophy to rail buttons, ideally you would like to design and install them so that they are also super strong and don't pop off easily. Makes sense, doesn't it?

What I prefer to do is to use the Apogee rail buttons that come with a weld-nut that is installed from the inside of the rocket. This is like a through-the-wall fin in that is very strong. But using this type of rail button requires that you plan ahead and pre-drill the holes for the buttons prior to installing them.

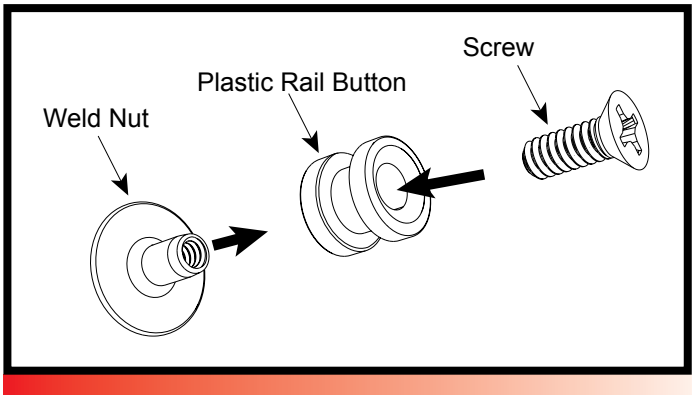

Figure 1: The components in the Apogee rail button set

Installing the front button isn't a problem. The big problem is the back rail button. Typically it is placed near the back end of the rocket's tube. The reason is that it makes loading the rocket on the rail much easier because you can see it going into the long rail. The further up on the rocket it is placed, the harder it is to load the rocket on the rail when you're ready to launch.

Check out our Facebook page
www.facebook.com/ApogeeRockets

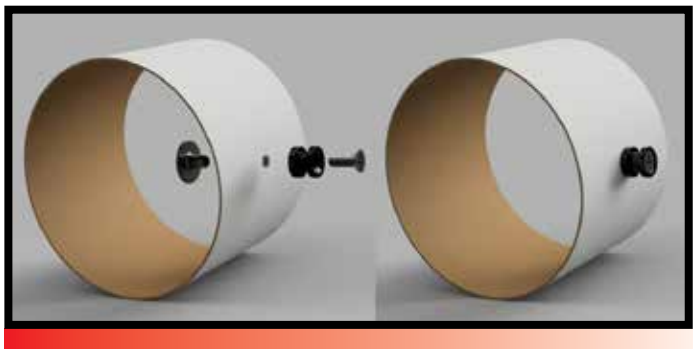

Figure 2: Installing the rail button requires a hole in the side of the tube. The shank of the weld nut is inserted from the inside of the tube through a pre-drilled hole. Then the button and screw are attached to hold it securely onto the rocket.

Where Should Rail Buttons Go On Your Rocket?

Speaking of placement, we also get the question of where the ideal location should be. You'll obviously need two rail buttons, or the rocket will just pinwheel around when the rocket motor is launched.

You should place the two buttons so that they are on either side of the Center-of-Gravity (CG) of the rocket. Further apart is better if you have room. As mentioned, I put the rear one as far back on the tube as practical - just so that you can load the rocket on the rail a bit easier.

The front one needs to be ahead of the CG, and in a location where any tube couplers wouldn't be smacking into it when you assemble the rocket.

Continued on page 3

About this Newsletter
You can subscribe to receive this e-zine FREE at the Apogee Components website **www.ApogeeComponents.com**, or by clicking the link here Newsletter Sign-Up

Newsletter Staff
Writer: Tim Van Milligan
Layout/Cover Artist: Chris Duran
Proofreader: Michelle Mason

Installing Rail Buttons On Your Rocket

Continued from page 2

What is the Real Issue with Rail Button Placement?

The issue is that there are centering rings also near the end of the tube that interfere with the weld nut's flange. The back ring either interferes with the weld nut, meaning they are right on top of each other, or you can't get the ring to slide past the weld nut when you're putting the rocket together.

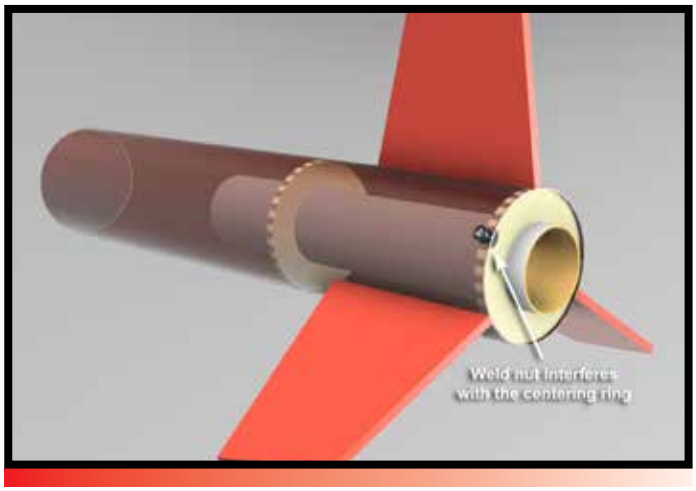

Figure 3: Putting the aft rail button at the end of the tube makes it easiest to load the rocket onto the rail because you can see the button without obstruction. But the weld nut often interferes with the aft centering ring.

I have three ways around this that have worked for me, if you want to install the rail button first. And I prefer to install it first, because then it is the strongest because you can put an extra coat of epoxy over the flange to hold it to the inside of the tube.

The first method is what I used on the EggStorminator rocket (https://www.apogeerockets.com/Rocket-Kits/Skill-Level-4-Model-Rocket-Kits/EggStorminator).Here, you build the engine mount outside of the rocket. Then you partially install it into the rocket so the front ring is past the hole for the rail button. You tilt the mount off to one side so that you can reach in with your finger and install the weld nut and the centering ring. Then you continue with the installation of the motor mount.

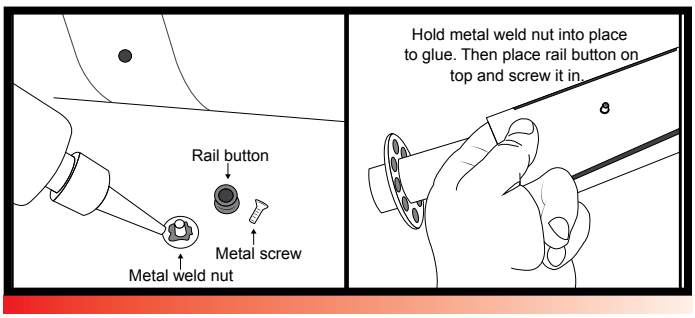

Figure 4: Partially insert the engine mount so the front ring is beyond the hole, so the weld nut can be inserted.

If there is a downside of this approach, it is that you have to do a lot of things at the same time, like applying glue in front of the forward centering ring, putting extra epoxy over the weld nut, and putting glue in front of the aft centering ring as you glue it into the rocket.

Another method is that you can flatten or make a cut-out on the forward centering ring of the engine mount. This allows you to also build the engine mount outside of the rocket and still slide it into the tube, and it will slide over the edge of the flange of the weld nut. Once it is in place, you can epoxy the engine mount into place as you normally would.

Continued on page 4

Installing Rail Buttons On Your Rocket

Continued from page 3

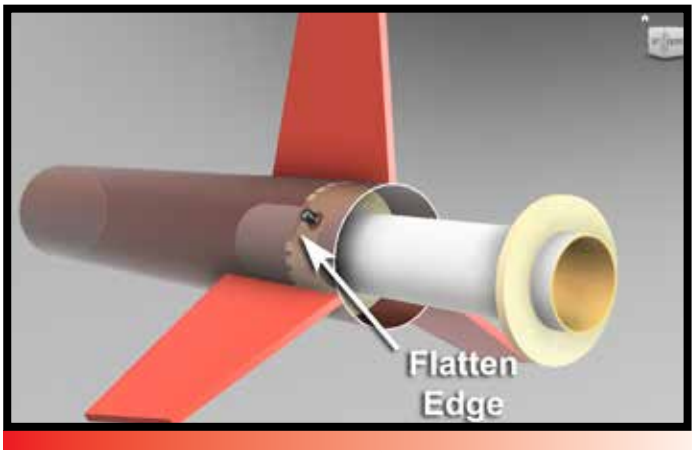

Figure 5: Flattening a side of the forward centering ring will allow the engine mount to slide past the aft rail button.

There are two downsides of this. The first is that you can't put too much epoxy over the flange of the weld nut, or the engine mount assembly won't slide past.

The second issue is that you'll be left with a gap on the forward centering ring where it was flattened out. This gap may cause you some worry. Why? Because it might allow the gasses from the ejection charge to go rearward out the back end of the tube instead of blowing the nose cone off the rocket.

In my opinion, this isn't a big issue unless you don't fill the gaps in the engine mount area. This includes putting good air-tight fillets on the fins if they are of the through-the-wall type. The gap on the front ring is OK as long as the rest of the rear end is air tight.

If it bothers you, what I would recommend is that you fill it with an epoxy clay like the FixIt clay (https://www.apogeerockets.com/Building_Supplies/Epoxy_Clay/FIXIT_Epoxy_Clay) or the BondAide epoxy (https://www.apogeerockets.com/Building-Supplies/Adhesives/Bond-Aide-Epoxy-Putty-Stick). Either would work well in this application because they are stiff and don't run like a liquid epoxy would. But getting it deep down inside the tube is the tricky part. What I do is roll the epoxy into a cylinder and drop it into the front of the tube and then use a long dowel to push it into place and smoosh it down into the gap. Once the gap is filled, you can come back later and pour some liquid epoxy into the tube to fill any tiny pin-holes that might have been left over.

The third method of installing the rail button with the flange on it, is to make the back centering removable. This is the method that I've used on rockets like the Zephyr (https://www.apogeerockets.com/Rocket-Kits/Skill-Level-3-Model-Rocket-Kits/Zephyr) and the Peregrine (https://www.apogeerockets.com/Rocket-Kits/Skill-Level-3-Model-Rocket-Kits/Peregrine). I drill holes into the back centering ring before sliding it onto the engine mount tube. Then a strong cord is woven through the holes so that the loops of the cord create handles that will allow you to pull the ring out of the rocket.

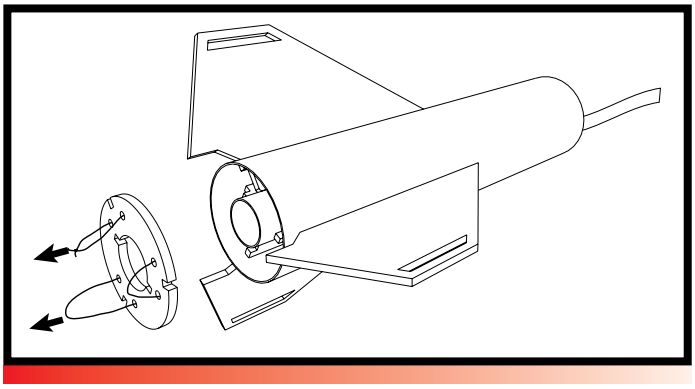

Figure 6: Removing the aft ring after the fins are installed allows easy access into the rear of the rocket to install the rail button and apply internal epoxy fillets inside the tube.

Once you pull the ring out, you'll have plenty of room to get your fingers inside so that you can insert the weld nut into the rocket and then put extra epoxy over the flange to really lock it into place.

What keeps the engine mount from moving around when you pull the back ring off? By this time, the fins are bonded to the rocket, and it

Continued on page 5

Installing Rail Buttons On Your Rocket

Continued from page 4

is the through-the-wall tabs that are holding the engine mount concentrically in the tube. So the engine tube stays in place which allows you to slide the back ring off, and then reinstall it later after you've installed the rail button and slathered epoxy fillets internally inside the back end of the rocket.

I really like this method because you aren't rushed to get everything done like you are with the first method used on the Eggstorminator rocket kit. And at the same time, you can put in good epoxy fillets that really make the rocket strong, and you can do them all at once to save a lot of time.

You can see a video of this technique is at: https://www.apogeerockets.com/Zephyr-Build-Part-4

What to do if the Rocket Already Has its Motor Mount Installed?

This situation is not optimum for creating the strongest rail button attachments. As mentioned, the strongest ones are when you can get a hex-nut or a weld nut on the inside of the tube. If the rocket is already built and you're retrofitting rail buttons on it, you may have to settle for "strong enough."

This is another question that I'm often asked. How strong is "strong enough?"

Now you have to think like an engineer and consider the forces acting on the rocket, and whether or not whatever you build will be stronger than the external forces.

Once the rocket is in the vertical position on the launch rod, there isn't much force trying to tear the rail buttons off. Basically, you only have the weight of the rocket itself to support. So if the attachment is stronger than the weight of the rocket, you'll be OK.

This is why rail guides (https://www.apogeerockets.com/Building-Supplies/Launch-Lugs-Rail-Buttons/Rail-Buttons-Guides/Universal-Rail-Guides) are perfectly acceptable on most high power rockets, as long as the glue joint bond holding it to the model is strong enough to hold the weight of the rocket. It is actually a shear force, for which glue is really good.

As the rocket slides up the rod at launch, there are really no forces on the buttons at all, so that is not where you have to worry either.

Where forces are large is when you're putting the rocket onto the rail. The rail guide must slide perfectly straight along the fingers of the rail. But what can easily happen is that you get the rail guide partially inserted into the fingers of the aluminum rail, and then the rocket gets twisted. Now you have a torque force on the rail guide. The longer the rocket, usually the higher the torque force trying to twist the rail guide off the rocket. And they usually pop off rather easily.

The fix when you're out at the launch range is to run back to your car and grab your bottle of super glue, and bond the rail guide back onto the rocket. And the second time you load the rocket onto the rail, you can bet you'll be really careful to make sure to slide the rocket slowly along the rail until both the rear and the front rail guides are inside the grip of the rail.

Been there… done that... (a few dozen times). You'd think I'd learn my lesson about loading the rocket slowly and carefully onto the launch rail.

The nice thing about buttons versus rail guides is that they are short and round. So if you twist the rocket after you have the aft button inside the fingers of the rail, it doesn't typically snap off the rocket. They are much more forgiving of rough handling when loading the model onto the pad.

Getting back to the question of what is "strong enough" for a rail button, you could theoretically just glue the plastic button to the rocket. But it doesn't have a lot of glue surface to attach it to the tube. While theoretically it could be strong enough, I would say in practical terms that it is not strong enough.

Putting a post through the middle, so that something goes through the tube, is much better. However, without something on the back side of the tube, it could easily pull out. It won't twist off, or shear off, but it could still pop out at the most inconvenient time during the loading of the rocket on the pad.

Continued on page 6

Quick-Change Motor Adapters

- Allows you to use smaller diameter motors in your rocket kits (adds versatility)
- Change out motors in seconds
- Works with all single-use and re-loadable motors
- Four sizes available

www.ApogeeRockets.com/Building_Supplies/Motor_Mount_Kits_Adapters/Ready-to-use_Motor_Adapters

Installing Rail Buttons On Your Rocket

Continued from page 5

What a lot of other kit manufacturers do is to provide a wood screw, and have you insert that into the aft centering ring of the engine mount. This is what was shown in the the building of the Torrent rocket in one of our tutorial videos: https://www.apogeerockets.com/Advanced_Construction_Videos/Rocketry_Video_64

The issue that confounds me when I try to do this is that I somehow miss the exact center of the ring, and my pilot hole ends up being off to one side. Now either my hole is partially into the wood, or not even close.

At that point, they tell you to put some epoxy on the threads and hope that it will hold. Again, this will be fine once the rocket is in the vertical launch position. But I find that they do tend to pull out during the process of loading it on the launch rail.

What we at Apogee Components tell people to do is to put the screw through the tube and press some epoxy clay around the part that sticks through the tube.

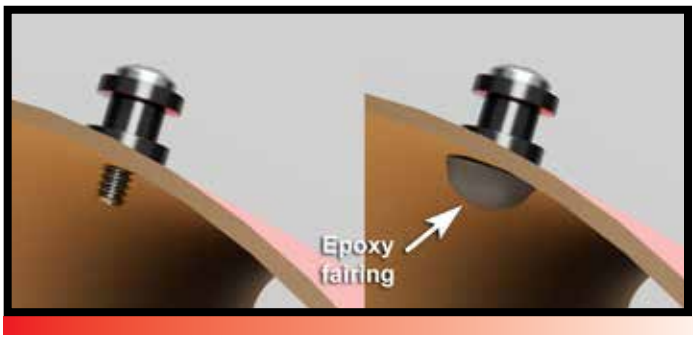

Figure 7: Put an epoxy clay fairing over the threads to hold the rail button onto the rocket.

This accomplishes two things. First, it holds the screw in the hole so it is much stronger and difficult to pull out. This is the primary reason for adding the epoxy.

But what it also does, particularly on the forward rail button, is that it makes it a fairing that prevents the parachute from snagging on the screw at the ejection point of the flight. What I like to do is smooth out the epoxy clay so that the edges where it touches the tube are really feathered out so there is nothing for the chute to catch.

But how do you get epoxy clay onto the post of the rear rail button? That is what you are thinking, right?

What I recommend is that you position the rail button so it is just forward of the back centering of the engine mount. Then drill a hole from the base of the model through the centering ring close to where the screw of the rail button is going to be.

Figure 8: Drill a hole close to the rail button.

Now insert the rail button's screw into the tube. From the base of the rocket, drizzle some paste-thick epoxy onto the portion of the screw that projects into the rocket. I like to use the RocketPoxy (https://www.apogeerockets.com/Building_Supplies/Adhesives/G5000_RocketPoxy_Pint_Package) for this application, because it is thin enough to pour, but thick enough to stay in place while it hardens. Get in there with a dowel to spread it around if you have to, and then flip the rocket over so the rail button hangs downward so the epoxy stays in place while it cures.

Continued on page 7

Check out our Facebook page
www.facebook.com/ApogeeRockets

Experienced HPR Builders Use Thrust Plates

- Eliminates Shear Forces on Centering Rings
- Mates with AeroPacks Flanged Engine Retainers
- Fits Standard HPR Tubes, Blue Tubes, and Fiberglass Tubes
- Made from Aircraft Grade Aluminum

https://www.apogeerockets.com/Building_Supplies/Thrust_Plates

Installing Rail Buttons On Your Rocket

Continued from page 6

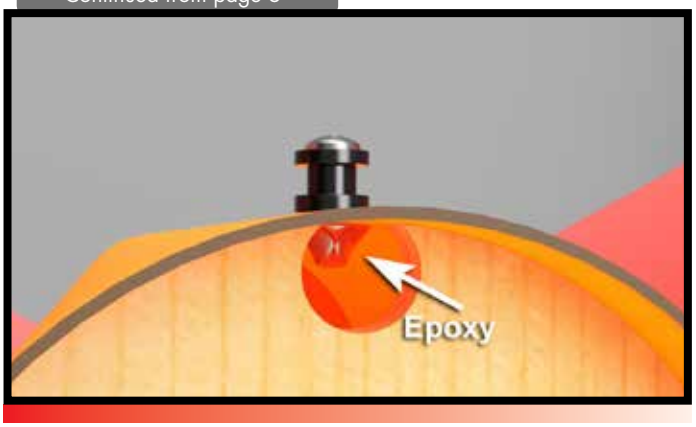

Figure 9: Try to capture the threads by putting epoxy through the hole.

Of course, you're left with a hole in the bottom of you centering ring. But this is mostly just a cosmetic problem. The ring hasn't really lost much strength, and I've never seen one break. If you have through-the-wall fins, they are what is really adding strength to the rocket anyway.

If you don't like the look of the hole, you can patch it over. Something as thin as a sheet of paper will cover the hole. And if you paint over it, no one is ever going to know that you put a hole through the aft ring.

The nice thing about this method is that you can retrofit it to a rocket that has already been constructed. And it might even be possible to do it as an on-the-field repair.

Rail Buttons on Stand-offs

I actually covered one technique of putting a rail button on a stand-off in one of our Advanced Construction Videos. The technique was to sculpt a stand-off out of the FixIt epoxy clay. The cool thing is that you can create an aerodynamic fairing around the post, to lower the drag of the stand-off.

See https://www.apogeerockets.com/Advanced_Construction_Videos/Rocketry_Video_206.

I was recently putting together a fiberglass kit from Mach 1 rocketry, and what the kit had as a stand-off was a little trapezoidal shaped piece of fiberglass (like a very small fin) and a rail button to attach to it. It was one of those situations you have to figure out on your own.

What I did was to cut a small notch into the tip portion of the fiberglass, and then bond the threaded portion of the screw into it. Because the screw was a smidge larger in diameter than the thickness of fiberglass, I used some FixIt epoxy clay to make an aerodynamic fairing over the threads. Not only did it add strength to prevent the screw from twisting out, it lowers the drag on the rocket. When painted up, it looks really professional.

Figure 10: A notch was cut in the fiberglass standoff, and the post was glued inside.

Figure 11: FixIt epoxy clay was sculpted to form a fairing over the threads, and to hold the screw firmly in place.

Continued on page 8

Installing Rail Buttons On Your Rocket

Continued from page 7

Figure 12: The standoff painted is so smooth that you can't even see the epoxy fairing.

Conclusion

I highly recommend flying off a long launch rail, because it adds safety to the launch. The longer the launcher, the faster the rocket is going by the time it is in free flight. So there isn't much of a drawback for adding rail buttons to your rocket. And adding a rail button to your rocket can be done if you put a little thought into it.

I hope I've given you several ideas that you can use in your rocketry projects. If you have ideas that I haven't covered in this article, please let me know and we'll try to share them with other modelers.

About The Author:

Tim Van Milligan (a.k.a. "Mr. Rocket") is a real rocket scientist who likes helping out other rocketeers. He is an avid rocketry competitor and is Level 3 high power certified. He is often asked what is the biggest rocket he's ever launched. His answer is that before he started writing articles and books about rocketry, he worked on the Delta II rocket that launched satellites into orbit. He has a B.S. in Aeronautical Engineering from Embry-Riddle Aeronautical University in Daytona Beach, Florida, and has worked toward an M.S. in Space Technology from the Florida Institute of Technology in Melbourne, Florida. Currently, he is the owner of Apogee Components (http://www.apogeerockets.com) and also the author of the books: Model Rocket Design and Construction, 69 Simple Science Fair Projects with Model Rockets: Aeronautics and publisher of the "Peak-of-Flight" newsletter, a FREE ezine newsletter about model rockets. You can email him by using the contact form at https://www.apogeerockets.com/Contact.

Derivation of the Apparent Drag Coefficient

By David T. Flanagan

Introduction

In Peak-of-Flight Newsletters 206 and 207 (https://www.apogeerockets.com/education/downloads/Newsletter206.pdf, https://www.apogeerockets.com/education/downloads/Newsletter207.pdf), David T. Flanagan introduced us to parawing recovery. In very simple terms, the parawing (**Figure 1, Left**) is a parachute that is designed to glide as it descends. The advantage is that they are more efficient. A LOT more efficient.

Figure 1: Parawing Parachute (Left) compared to a standard Drag Parachute (Right)

How much more efficient? That is the subject of this article. What you'll read is that David goes through the math and derives what would be the equivalent Coefficient-of-Drag (C_D) of a gliding parachute if it acted like a simple drag-producing parachute (**Figure 1, Right**). You can skip the math, and jump down to the bottom and see how much the drag coefficient would change. It is pretty staggering. What it means is that the rocket either descends a lot slower if you use the same surface area of cloth, or you can use a much smaller piece of fabric.

Some parachutes produce only drag, and their performance can be quantified by the drag coefficient (C_D). Other parachutes glide, thus producing lift as well as drag.

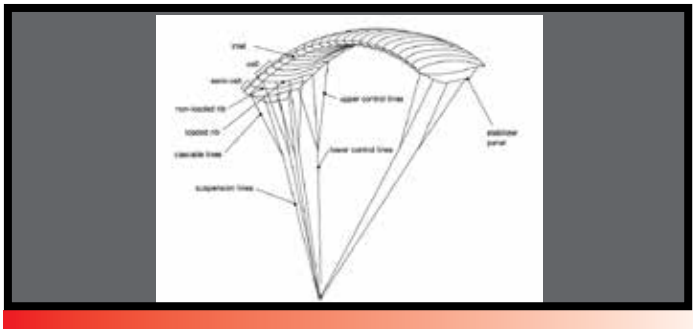

Figure 2: Ram air inflated Jalbert type Airfoil Parachute.

Both the lift (C_L) and drag (C_D) coefficients are needed to describe the performance of this type of parachute.

An apparent drag coefficient (C_{Dapp}) results from assuming in any test or analysis that a parachute that produces lift as well as drag produces only drag. It is possible to determine the apparent drag coefficient of a parachute that produces lift as well as drag by using its formal lift and drag coefficients.

Derivation

Lift, drag, weight, velocity, etc., are all vector quantities. For the sake of simplicity only the magnitudes of these vectors will be considered in the following equations, with their directions as noted in **Figures 3 & 4** (Page 12). Note the frame of reference (x, z) in the figures.

Standard equations for lift and drag are needed. Since Prandtl's work in the early 20th century, the accepted forms are:

Equation 1

$$L = \frac{\rho}{2} v_s^2 C_L S$$

and

Equation 2

$$D = \frac{\rho}{2} v_s^2 C_D S$$

where (using SI units) the forces of lift and drag are in newtons (N), ρ is the fluid density in kg/m^3, v is the system velocity in m/s, and S is area in m^2. The coefficients are of course dimensionless. Drag is always parallel to the velocity and in the opposite direction of the velocity, and lift is always perpendicular to drag.

In steady state descent there is no change in velocity thus the sum of the forces on the system is zero.

Equation 3

$$\sum \vec{F} = m\vec{a} = m\frac{d\vec{v}}{dt} = 0$$

Therefore the forces are balanced during steady state descent.

Continued on page 10

Check out our Facebook page
www.facebook.com/ApogeeRockets

Derivation of the Apparent Drag Coefficient

Continued from page 9

Drag Parachutes

Developing the steady state balance of forces for a parachute that produces only drag is straight forward (**Figure 1**). The weight must be equal to and opposite the drag.

Equation 4

$$D + W = 0$$

Since there is no horizontal velocity component the velocity v_s in equation 2 becomes the vertical velocity v_z, or rate of descent. **Equation 2** then becomes

Equation 5

$$D = \frac{\rho}{2} v_z^2 C_D S$$

Also noting that

Equation 6

$$W = mg$$

equations 4, 5 and 6 give

Equation 7

$$mg = \frac{\rho}{2} v_z^2 C_D S$$

Lift Drag Parachutes

Developing the balance of forces for a parachute that produces lift as well as drag is slightly more complex since the weight is balanced by both lift and drag (**Figure 4, Page 12**). Let R be the magnitude of the resultant force found by vector addition of the forces of lift and drag.

Join Tripoli.org
Mention Apogee Components

Equation 8

$$R = \sqrt{L^2 + D^2}$$

Equations 1 and **2** may be substituted into **Equation 8**. The result is

Equation 9

$$R = \frac{\rho}{2} v_s^2 S \sqrt{C_L^2 + C_D^2}$$

This resultant force is then equal and opposite to the force of the weight

Equation 10

$$R + W = 0$$

Then from **Equations 6**, **9**, and **10**

Equation 11

$$mg = \frac{\rho}{2} v_s^2 S \sqrt{C_L^2 + C_D^2}$$

Apparent Drag Coefficient

The right hand terms of **Equations 7** and **11** may be set equal to one another. In the term from **Equation 7** the drag coefficient C_D is replaced by the apparent drag coefficient C_{Dapp} to acknowledge that a parachute that produces lift and drag rather than just drag is being considered.

Equation 12

$$\frac{\rho}{2} v_s^2 S \sqrt{C_L^2 + C_D^2} = \frac{\rho}{2} v_z^2 C_{D_{app}} S$$

Canceling terms gives

Equation 13

$$v_s^2 \sqrt{C_L^2 + C_D^2} = v_z^2 C_{D_{app}}$$

Continued on page 11

Derivation of the Apparent Drag Coefficient

Continued from page 10

Consider now velocity and its components. From **Figure 4** it is clear that

Equation 14

$$v_s^2 = v_x^2 + v_z^2$$

which when substituted into **Equation 13** gives

Equation 15

$$(v_x^2 + v_z^2)\sqrt{C_L^2 + C_D^2} = v_z^2 C_{D_{app}}$$

But also from **Figure 2** (and the equations for lift and drag)

Equation 16

$$\frac{v_x}{v_z} = \frac{L}{D} = \frac{C_L}{C_D}$$

so horizontal velocity (v_x) can be described as follows:

Equation 17

$$v_x = \frac{C_L}{C_D} v_z$$

Substituting this result into **Equation 15** gives

Equation 18

$$\left(\frac{C_L^2}{C_D^2} v_z^2 + v_z^2\right)\sqrt{C_L^2 + C_D^2} = v_z^2 C_{D_{app}}$$

which when divided through by the square of the vertical velocity (v_z^2) and rearranged becomes

Equation 19

$$C_{D_{app}} = \left(\frac{C_L^2}{C_D^2} + 1\right)\sqrt{C_L^2 + C_D^2}$$

The apparent drag coefficient in **Equation 19** can be used in **Equation 7** to predict of the performance of a parachute producing lift and drag as if it were producing only drag.

The required lift and drag coefficients have been determined for a wide variety of gliding parachutes by wind tunnel and other testing.

Equation 19 was pulled from the top of page 191 of *Model Rocketry Resources and Components*. It was presented there without derivation.

By way of example, in a wind tunnel test a small single keel parawing exhibited C_L = 1.02 and C_D = 0.475 at an approximate velocity of v_s = 6.2 m/s [2]. The calculated apparent drag coefficient is then C_{Dapp} = 6.31. Note that parachutes producing only drag seldom exhibit drag coefficients greater than C_D=1.0.

Modifying **Equation 7** to reflect the use of the apparent drag coefficient

Equation 20

$$mg = \frac{\rho}{2} v_z^2 C_{D_{app}} S$$

And solving for the rate of descent (vertical velocity)

Equation 21

$$v_z = \sqrt{\frac{2mg}{\rho C_{D_{app}} S}}$$

Thus **Equation 21** may be used to estimate the vertical rate of descent of a parachute producing both lift and drag.

References

[1] Van Milligan, T. S. *Model Rocket Design and Construction*, 3rd Ed, Apogee Components, Inc., 2008.

[2] Naeseth, R.L. and Fournier, P.G., *Low Speed Wind Tunnel Investigation of Tension Structure Parawings*, NASA-TN-D-3940, June 1967.

Continued on page 12

Derivation of the Apparent Drag Coefficient

Continued from page 11

About The Author:

Dave is a registered professional engineer with well over twenty years of aerospace experience at NASA's JSC and MSFC. He holds bachelors and masters degrees in engineering and a bachelors degree in science, and while at MSFC supported NASA's University Student Launch Initiative. Although no longer actively jumping, he is a former Army paratrooper and holds an expert skydiver rating. Dave is a master parachute rigger and has completed the AIAA Parachute Systems Technology Short Course. He is a licensed private pilot and a certified ultralight pilot. Dave is retired and spends most of his time scuba diving and kayaking but does occasionally fly with the Northeast Florida Association of Rocketry (NEFAR, NAR #563, TRA #35).

$$\vec{D} + \vec{W} = 0$$

$$\vec{v}_s = \vec{v}_z$$

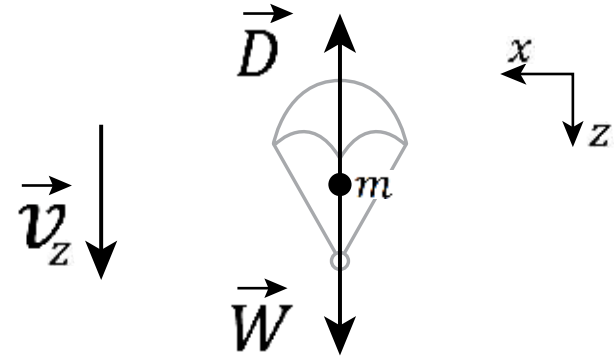

Figure 3

$$\vec{R} + \vec{W} = 0$$

$$\vec{R} = \vec{L} + \vec{D}$$

$$\frac{\vec{L}}{\vec{D}} = \frac{C_L}{C_D} = \frac{\vec{v}_x}{\vec{v}_z}$$

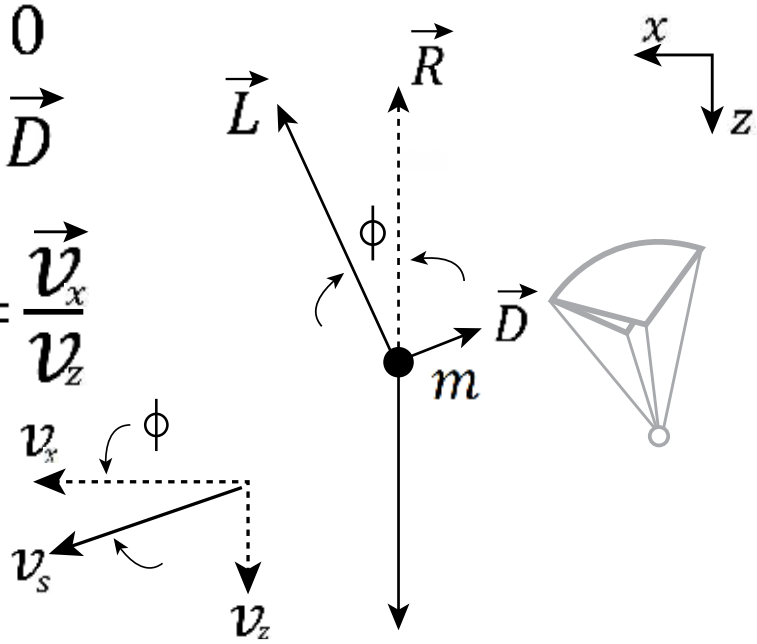

Figure 4