PEAK OF FLIGHT NEWSLETTER

ISSUE 499 | July 9th, 2019

IN THIS ISSUE

How to Scale up a Rocket Plan

https://www.ApogeeRockets.com/Rocket-Kits/Skill-Level-2-Model-Rocket-Kits/Sea-Sting

Apogee Components, Inc.
Your Source For Rocket Supplies That Will Take You To The "Peak-of-Flight"
4960 Northpark Drive Colorado Springs, Colorado 80918 USA
www.ApogeeRockets.com e-mail: orders@apogeerockets.com Phone: 719-535-9335 Fax: 719-534-9050

PEAK OF FLIGHT

How to Scale up a Rocket Plan

By Tim Van Milligan

Figure 1: Scale model kit comparison

You've got a new rocket plan, and you get the idea that you'd like to make a large version of it. Bigger versions always make a huge impression on spectators at a launch, especially if they have first-hand knowledge of the smaller version, or if they can see the two rockets side-by-side.

Why do bigger rockets grab the attention of others? I think the first reason is that big rockets stimulate the 5-senses in a greater way than smaller ones. When you look at them from the same distance away, the bigger one takes up more space visually. You can't help but notice them, like you would a big orange glowing neon sign that stands alone in the middle of a highway on a dark night. They grab your attention, because they pop out from the surroundings and take up so much room in the frame of your gaze.

Sound-wise, the upscale rockets also have a larger roar at take-off than a smaller one due to the bigger nozzle opening in the motor that is needed to push the rocket in the air. And since the bigger motors produce more smoke, there is a greater chance of getting a whiff of the smell they make as they take off. When all your senses are taking in information at once, the thought that is going through your head is that something important is present here, and you better take notice of it.

The other reason people are impressed by bigger rockets is that they assume that the amount of work to build a larger version was proportionally more than the smaller one. They know that building a large sandcastle takes a lot more work than building a small one, so they apply this same logic to building a large rocket. There may be some truth to that, depending on the size of the rocket. People are impressed by something that took a lot of work to create.

Whatever the reason may be, people are drawn to "BIG" things. So scaling up a small rocket to a big one is something that is very common in rocketry. If you've never done it before, this article will give you the steps you'll need to make a successful bigger version.

Start with a Plan

What I like about scaling up rockets is that it is a lot like designing a rocket from scratch, but there are some advantages.

The big advantage is that you're starting with a design that already has some visual appeal. People like it because it evokes an emotional response, because it reminds them of something that is important to them. Its shape as well as the graphics on the rocket trigger that pleasurable feeling. To be honest, this is the hardest part of designing a rocket. It has to be visually appealing, or you just don't really care too much about it. We all have our favorites, and the ones that we care about look gorgeous to us.

Starting with a small rocket that already has visual appeal means that the larger version will have that same appeal, and then it gets enhanced by the heightened level of your five senses. Incidentally, I always get a kick when people upscale one of the Apogee kits. That tells me that we found a shape and a decor that appeal to people as much as it appealed to me.

The other nice thing about upscaling an existing plan is that the stability of the rocket has already been proven. If you're new to rocketry, you may not fully understand all the factors that affect the stability of the model and whether or not it will be safe when you fly it.

With the larger version, you can be assured that when you launch it it will fly straight as long as you have the CG in the appropriate spot. You don't need to change the shape or the size of the fins to get it to fly straight.

But what is that appropriate spot? In short, if the Center-of-Gravity (CG) is two body tubes diameter in front of the fins on the plan, then on the upscale rocket the CG should also be two body tubes diameter in front of the fins.

This doesn't take a lot of mental ciphering, and allows you to create rockets that you know will be stable and safe when you launch them.

What Size To Make the Upscale?

The first task that you need to perform is to decide how big of a rocket you want to make. The limiting

Continued on page 3

About this Newsletter

You can subscribe to receive this e-zine FREE at the Apogee Components website **www.ApogeeComponents.com**, or by clicking the link here Newsletter Sign-Up

Newsletter Staff

Writer: Tim Van Milligan
Layout/Cover Artist: Chris Duran
Proofreader: Michelle Mason

How to Scale up a Rocket Plan

Continued from page 2

factor is the availability of the parts from which to make the larger rocket.

"What is available to you?" This is the question you have to ask. I know it is disappointing to hear that you can't get a custom part that you need for your upscale. In a world where everything is moving to be "customized," there are still a lot of items that aren't available in multiple sizes. For example, the hardest parts to find are large nose cones.

Your first task, before you do anything else in the process is to go and find a nose cone that is approximately the same general shape as is called out in the rocket plan that you have. If the original plan calls for an ogive shaped nose cone with a length-to-diameter ratio of 3-to-1, then your larger version should also have the same length-to-diameter ratio that is 3-to-1. Ideally, you want it to be close to that shape because "shape" is one of the factors that give a beautiful aesthetic appeal to the design. If you start changing shapes, then the larger version will look odd to other people that are already familiar with the design.

Matching the shape of the nose cone is a challenging part of the process. A lot of times, you'll find that it is impossible to find a nose with the exact proportions that you need. In that case, your only options are to make the nose cone yourself (maybe get it 3D printed), or just go with a shape that is not a perfect match.

When I upscaled the Orion Luxury Shuttle plan (**Figure 2**) (https://www.apogeerockets.com/education/downloads/Newsletter78.pdf) and turned it into the Dynastar Orion (https://www.apogeerockets.com/Rocket-Kits/Skill-Level-3-Model-Rocket-Kits/Orion), I had no choice but to change the shape from a parabolic nose to one that was a longer 5-to-1 ogive shape. That was the only large nose cone that I had available.

Fortunately, making the nose cone longer seems to have a nice visual appeal to it. If you make your upscale have a longer nose cone, people will think it looks different, but not dis-harmonious. It still looks attractive. On the other hand, in my opinion making the nose cone shorter on the larger version is definitely less appealing to the eyes. This is just my own personal opinion, so don't take that as a hard-and-fast rule that you can't violate. It is all subjective.

With the nose cone selected for the larger version, we now can get down to figuring out the scale ratio. For this, you'll need the exact diameters of the tubes.

Where do you get the exact diameters of the tubes? My go-to source is the Apogee Components website. Just go to the site and find the tubes the nose cones fit into, and we provide the dimensions that we use when we order them from our suppliers.

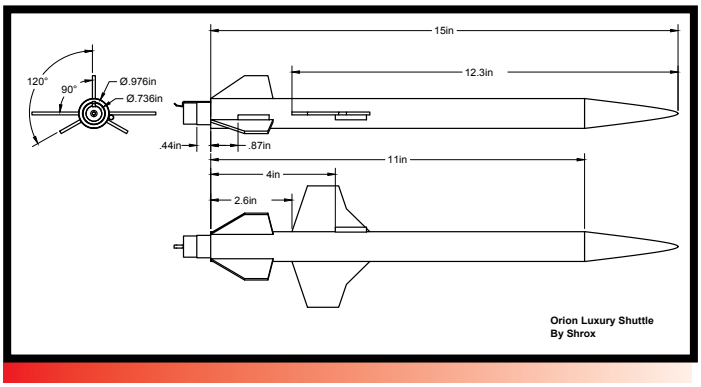

Figure 2: The plans for the Orion Luxury Shuttle that were used for the DynaStar kit.

For example, the original Orion plan called for the PNC-24A nose cone. If you look this part up on our website (https://www.apogeerockets.com/Building_Supplies/Nose_Cones/Low_Mid_Power_Nose_Cones/PNC-24A), you'll find that it fits a 24mm diameter tube. From here, I have to go to the tube page and find the exact outer diameter of the 24mm tube (also called the BT-50 size). https://www.apogeerockets.com/Building_Supplies/Body_Tubes/Low_Power_Tubes/24mm_x_18_Body_Tube_Estes_BT-50_size. From that part, you'll find the outer diameter as 0.976 inches.

Continued on page 4

Check out our Facebook page
www.facebook.com/ApogeeRockets

How to Scale up a Rocket Plan

Continued from page 3

Figure 3: The exact diameters of the tubes are found on the Apogee website.

Now you're going to do the same look-up for the upscale tube. In this case of the Dynastar Orion, the nose cone that was available is the PNC-56A (https://www.apogeerockets.com/Building_Supplies/Nose_Cones/Low_Mid_Power_Nose_Cones/PNC-56A_BT-70). From the chart on that page, you'll see that this nose cone fits the tube with P/N 10164. Just click on that part number and it will take you to the tube page where you'll find the dimensions.

Figure 4: From the nose cone selection chart, you can quickly find out what tube the nose cone fits into.

From the nose cone page, the outer diameter of the tube is 2.217 inches.

With these two diameters, we can now determine the scale factor for the upscaled rocket. That comes from this formula:

$$\text{Scale Factor} = \frac{\text{New Diameter}}{\text{Old Diameter}}$$

Putting in our diameter numbers that we got from the Apogee website:

$$\text{Scale Factor} = \frac{2.217 \text{ inches}}{0.976 \text{ inches}} = 2.272$$

What this means is that every dimension on the rocket will have to be multiplied by 2.272.

Take the body tube length for example. You'd find the length of the upscale rocket using this formula:

New Dimension = (Scale Factor) X (original plan Dimension)

From the original plans, the body tube length of Orion Luxury Shuttle rocket was specified to be 11 inches long. So for our upscale, you'd multiply as shown:

$$\text{New Dimension} = 2.272 \times 11$$
$$= 24.992$$

Now that we know the length of the tube as 24.992 inches, we'd go back to the Apogee website to select this part and start building our parts list. But here is where you're going to run into your first snag.

Apogee does sell the tube, but if you look at the website, you'll notice that the length is only 18 inches long.

Figure 5: The length of the tube is shorter than what is needed for the upscale.

Continued on page 5

Join Tripoli.org
Mention Apogee Components

How to Scale up a Rocket Plan

Continued from page 4

The common thing people ask us is where can they get a tube that is longer than what they need. Specifically, they ask if they can custom order it from us. Unfortunately, we do not make custom parts like this. Nor do we know which vendors do make a tube that long. Because of shipping costs, it is usually too expensive to ship a long tube, which is why we try to cap them at 18 inches.

The solution is simple - you'll use two shorter tubes that are joined by a tube coupler. On the web page for the body tube, if you scroll down a bit, you'll find a link to the tube coupler that fits into the tube so you can join two together to make any length you want.

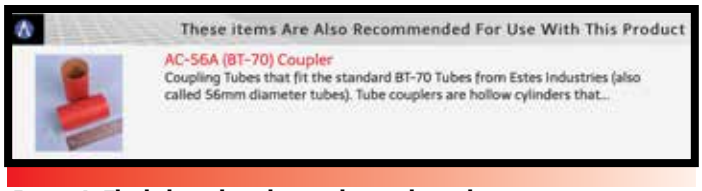

Figure 6: The link to the tube coupler on the web page.

Does joining two tubes together make the rocket any worse than if it was a single tube? Not really. The downside is that you have to take the time to join them together, and it has an extra part in the plans. But it is cheaper in the end compared to the shipping expense of a longer tube (if one was available).

And the other good thing is that the weight of the coupler is probably going to be ahead of the CG of the rocket, so you'll be adding more stability to the rocket. That is also a good thing.

So you see how the process goes from this point. You multiply the lengths in the original plan by your new scale factor, and then you go search for parts that will allow you to make the new rocket.

The fins are probably the easiest parts to upscale because you already know that you can't order fins that are already upscaled. Just taking that option off the table frees up your time that you might waste searching in vain for a part you can't get. It allows you to concentrate on figuring out real solutions to the design challenges.

How to upscale the fins depends on the original plan and what format it is in. In other words, is the plan you have already printed on paper, or is it in electronic format like a pdf? I prefer a pdf, because that is the highest resolution.

If the plans are in pdf format, and are 1:1 scale for the original plan, then you only have to print it out at the scale factor you've already calculated.

For example, if the drawing for the Orion fin was 100% actual size for the small version, then you'd simply go to the print menu on your computer, and find the little box that says to scale the drawing. However, the scale is not 2.27. You first have to multiply it by 100%, and you'll get 227%. Once you set the scale, click print, and you'll get a full size template for the upscale version of the rocket.

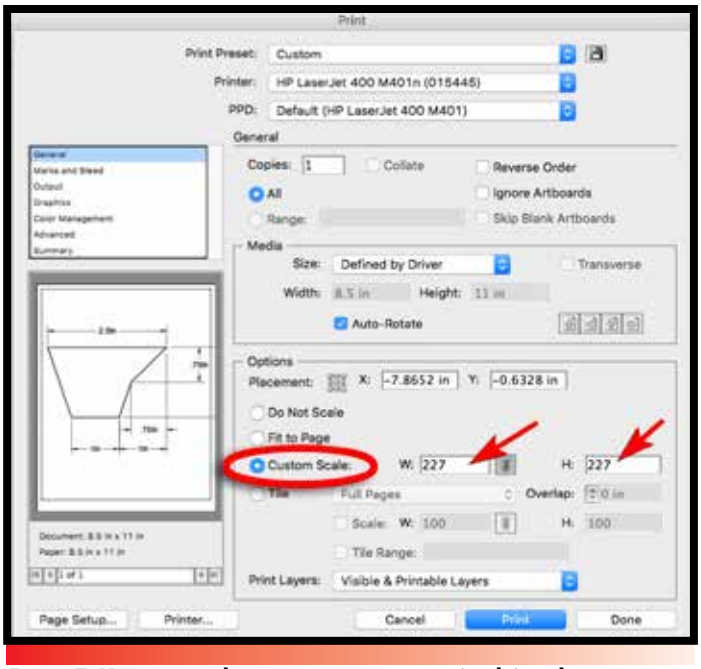

Figure 7: You can set the print size percentage (scale) in the print dialog box on your computer.

Continued on page 6

Check out our Facebook page
www.facebook.com/ApogeeRockets

How to Scale up a Rocket Plan

Continued from page 5

If the drawing is not at full scale you'll have to first print it out and convert all the dimensions to the new upscale size.

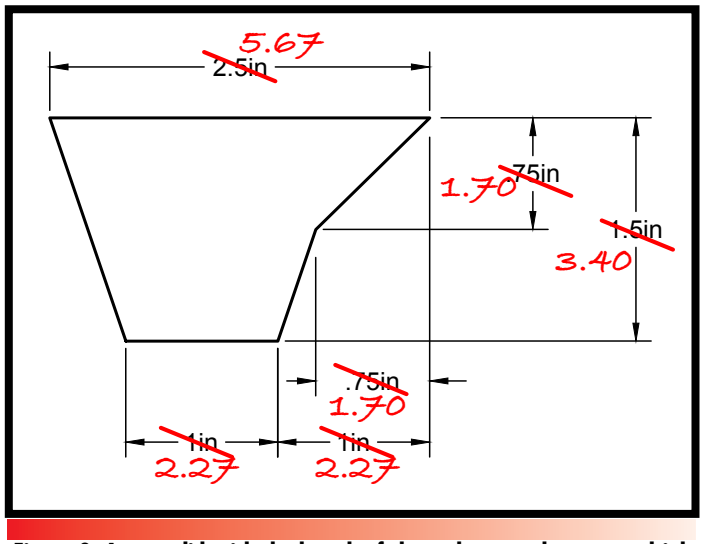

Figure 8: As you did with the length of the rocket, you have to multiply all the dimensions on the fin by the scale factor.

As you can see in **Figure 8**, I've taken all the dimensions and multiplied them by the scale factor to make the large up-scale rocket.

You can redraw the fins in a new drawing if you want, or you can re-print them to the correct size following this process.

Start by physically measuring one of the dimensions on the drawing with a ruler or caliper, as seen in **Figure 9**.

In this example shown in Figure SS, the length of the root edge is 1.668 inches, even though the drawing says it should be 2.5 inches. You'll ignore the 2.5 inches. The size we want it to be is 5.67 inches. That is the new dimension we want it to be when we print it out.

We'll create a new scale factor that we'll use to photocopy the image, or reprint it out on your computer.

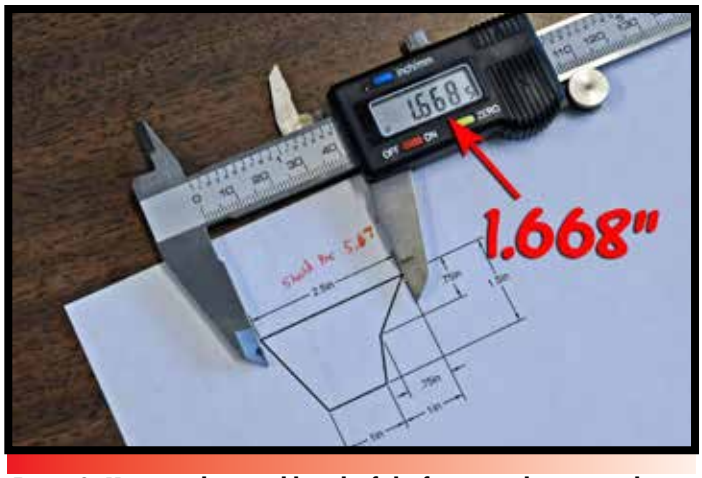

Figure 9: Measure the actual length of the fin as you have it on the drawing.

Like we did with the pdf version, you can change the scale of the print-out from the printer itself. So you'll end up with a full-size pattern that you can use for your upscale version of the rocket.

The new scale factor is:

$$\text{Scale Factor} = \frac{\text{New Dimension}}{\text{Old Dimension}} \times 100\%$$

In our example, we can get the dimensions from **Figures 8** and **9**.

$$\text{Scale Factor} = \frac{5.67 \text{ inches}}{1.668 \text{ inches}} = 3.4 \times 100\% = 340\%$$

Continued on page 7

How to Scale up a Rocket Plan

Continued from page 6

So now we take our original drawing and set the printer scale to 340% before we print it out.

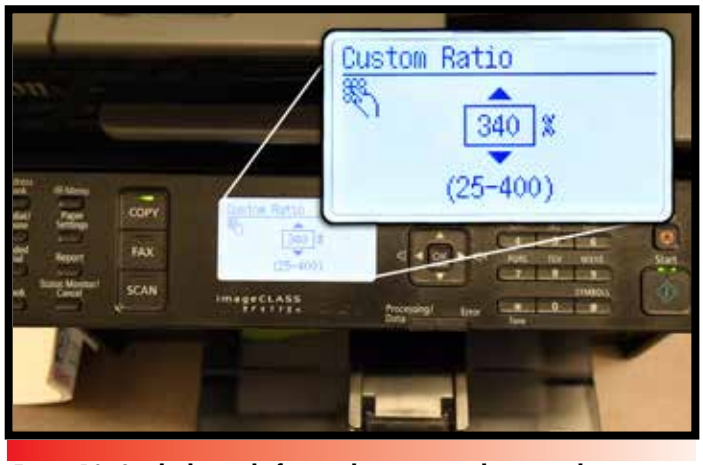

Figure 10: On the keypad of your photocopy machine, set the output size according to the new scale factor you calculated.

Once you print out the drawing, double check the accuracy by actually measuring the dimensions on the print-out with a ruler or caliper. You can compare **Figure 11** versus **Figure 8** to confirm that everything is sized correctly.

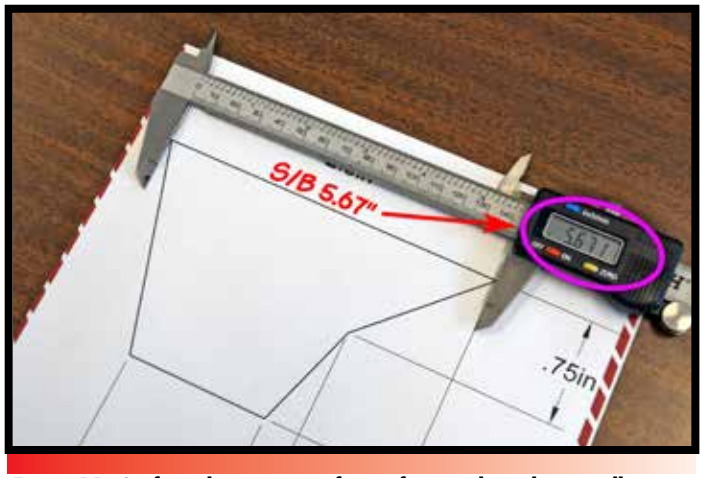

Figure 11: Confirm the accuracy of your fin templates by actually measuring the printed out lengths. Compare this to Figure 8.

Using RockSim Plans

If you are using plans from RockSim, it is even simpler to generate the fin templates in the right scale. First go the the "Rocket" menu at the top of the screen, and select the "scale" option (**Figure 12**).

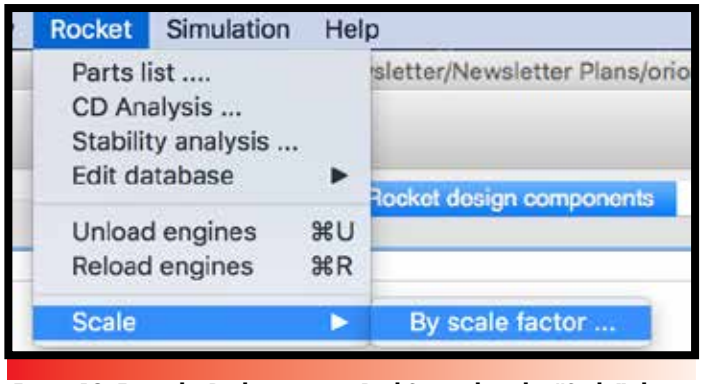

Figure 12. From the Rocket menu in RockSim, select the "Scale" choice, and then the "By scale factor…" option.

This will bring up a dialog box that you can type in the scale factor you want for the rocket. In our example of scaling up the Orion from a 24mm tube to a 56mm tube, the scale factor was 2.27 times, so that is what we type in the dialog box of RockSim (**Figure 13**).

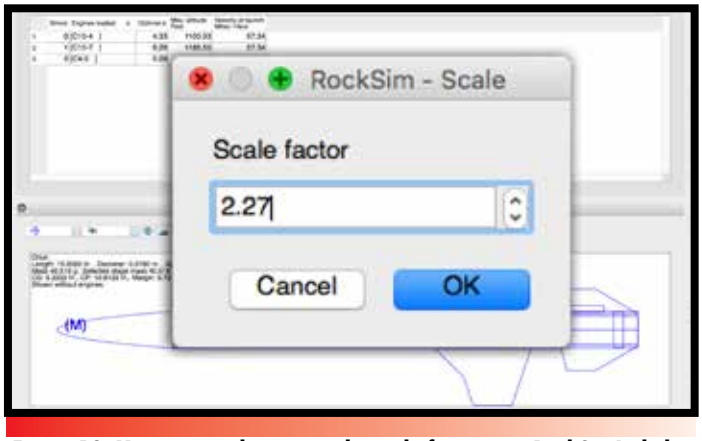

Figure 13: You can simply type in the scale factor into RockSim's dialog box, and it will automatically adjust the size of rocket for you.

Continued on page 8

How to Scale up a Rocket Plan

Continued from page 7

Once you are ready to print off the fin templates, you go to the print menu, and you'll get a dialog box as shown in **Figure 14**.

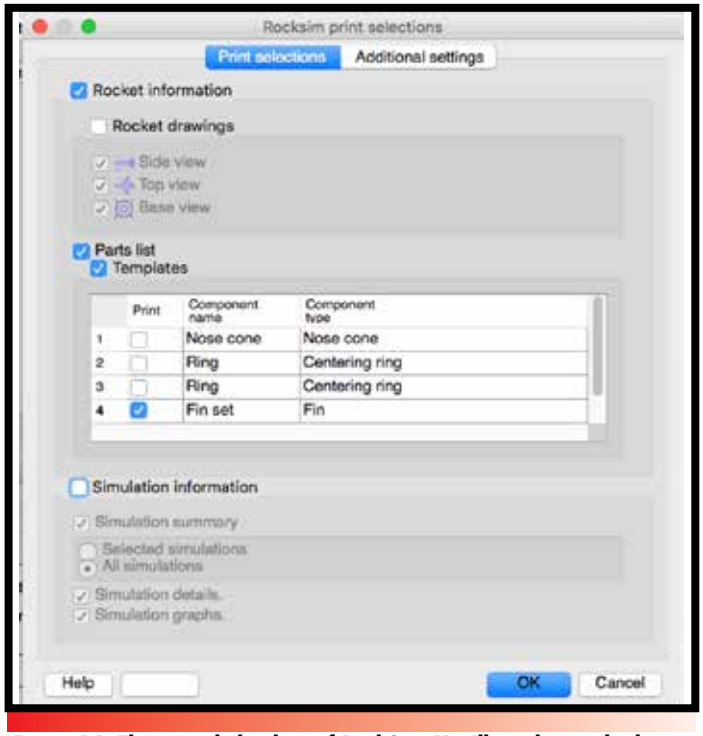

Figure 14: The print dialog box of RockSim. You'll need to uncheck some boxes so that you only get the fins, and not everything else.

When you get to the "RockSim Print Selections" dialog as shown in **Figure 14**, you'll have to be careful to check the boxes as shown. If you forget to uncheck the "Rocket Drawings" or the "Simulation Information," your printer will go crazy and print out a lot more pieces of paper that what you originally intended.

The cool thing is that the fin templates will be at the right size for your up-scale rocket project.

But what RockSim doesn't print out is a full-scale image of the entire rocket. It will always reduce the side, top and base view drawing to a size that fits a sheet of paper. If you want full size drawing of your rocket, there is a work-around but it involves using other drawing programs as well as RockSim. See Video Tutorial #25 on our website at: https://www.apogeerockets.com/RockSim/RockSim_Video_Tutorials

The Internal Components

The process above will get you the outside dimensions and templates for making the fins on your upscale rocket. However, there is more to the process than just creating fin templates. You still have to decide what size rocket motor you want to use in the design.

What doesn't scale up easily is the engine mount tube and the centering rings inside the rocket. For example, in our Orion kit, the original engine mount tube is 18mm in diameter. If we multiply that by 2.27, we would come up with a motor size of 40.86mm. But there is no such thing as a 40.86m motor. But there is a 38mm motor, which is pretty close.

Think about this though… would you put a 38mm (high power motor) into an Estes BT-70 tube? If you're new to rocketry, you might answer yes because you don't have anything to compare against. But if you have any experience, you'd know that the BT-70 tube is thin-wall and couldn't handle the forces created by a high power rocket engine. The tube would be crushed under the thrust of most of the 38mm motors available.

What I'm alluding to here is that you will have to make quite a few engineering decisions when you upscale a rocket plan. The first one is what size rocket motor you'll be using in the rocket. That will dictate the engine mount tube and the size of the centering rings inside the rocket. For our example here, I would suggest a smaller motor, probably a 24mm diameter engine for your first upscale design. In fact, that is what I chose when I created the DynaStar Orion rocket kit. It flies great on 24mm diameter D, E, and F size rocket engines.

The number of choices you'll have to make starts to snowball at this point. As you think about it, you could really get lost and discouraged. Not only do you have to select the motor tube, but you have to properly size the centering rings, the parachutes and also pick the materials the rocket is made from.

This is where you'll have to do a little bit of research. This is the way that I got my start in rocketry in the 1970s, and it is still the method I'd use if I were to start all over again and I didn't have anyone to ask for advice. Here is what I'd do:

Look at rockets that are similar size to what you're building, and choose the sizes of the internal components to be similar to those.

Continued on page 9

How to Scale up a Rocket Plan

Continued from page 8

You want to learn from the experience of other rocket designers. Actual kits are a great source of how-to information.

In our example here, I would go to the Apogee website and find rockets that are similar size to what you want to make. If they are “Apogee” or “DynaStar” rocket kits, the website contains full sets of assembly instructions in pdf format that you can download and look over. When you are looking at them, notice the size of the tubes, and the materials that are selected for the rockets. If you use something similar, you’ll probably have a good chance of having a successful design.

RockSim It!

When I started out in Rocketry in the 1970s we didn’t have software. So we didn’t have a systematic way to select rocket motors to fly in the rocket. What did we do in order to pick motors for our designs?

As suggested above, we went to the manufacturer’s catalogs and looked for rocket kits that were of similar size and weight to the ones we were going to fly. Then we choose motors that the manufacturers would suggest for the kits we were comparing against. If it worked for the manufacturers, I assumed it would work for me. As long as everything was similar, it worked out OK.

Back then, I studied the catalogs like they were engineering textbooks. To be honest, this system still works today.

If we wanted to check stability, we’d actually have to build the rocket and toss it across the room or try to do an unreliable swing test (https://www.apogeerockets.com/education/downloads/Newsletter53.pdf).

However, there is something better in today’s modern world. It is computer software like RockSim (https://www.apogeerockets.com/RockSim/RockSim_Information). The software is far more accurate in predicting the success of the launch, and I can’t recommend it enough. It is also far faster than trying to guess if a particular rocket motor will work in a new design (even an upscale). Even with the time you will have to invest in order to learn how it works, it is a huge shortcut to successful flights.

If you want to learn how to use it, I would suggest starting with Video #1 in the RockSim tutorials on the Apogee website: https://www.apogeerockets.com/RockSim/RockSim_Video_Tutorials

The other suggestion I have for completing your upscale rocket is to read the information in the book: Model Rocket Design and Construction (https://www.apogeerockets.com/Rocket_Books_Videos/Books/Model_Rocket_Design_And_Construction). The book is an easy read because it contains hundreds of illustrations and charts that will help you get all the internal components right for your upscale rocket.

Conclusion

I hope that this article gives you the initial guidance you need to upscale a classic model rocket plan. I would suggest you start with taking a small rocket and upscaling it by a factor between 2 and 3. In our example here, we use a scale factor of 2.27, and it gives a model with sufficient size that it will definitely be noticed on the launch range. And it still flies on motors that are easy to get and are affordable.

If you upscale an Apogee or Dynastar kit, please send us a photo. It would really help my fragile ego to know that people like our rocket designs enough to upscale them.

About The Author:

Tim Van Milligan (a.k.a. “Mr. Rocket”) is a real rocket scientist who likes helping out other rocketeers. He is an avid rocketry competitor and is Level 3 high power certified. He is often asked what is the biggest rocket he’s ever launched. His answer is that before he started writing articles and books about rocketry, he worked on the Delta II rocket that launched satellites into orbit. He has a B.S. in Aeronautical Engineering from Embry-Riddle Aeronautical University in Daytona Beach, Florida, and has worked toward an M.S. in Space Technology from the Florida Institute of Technology in Melbourne, Florida. Currently, he is the owner of Apogee Components (http://www.apogeerockets.com) and also the author of the books: Model Rocket Design and Construction, 69 Simple Science Fair Projects with Model Rockets: Aeronautics and publisher of the “Peak-of-Flight” newsletter, a FREE ezine newsletter about model rockets. You can email him by using the contact form at https://www.apogeerockets.com/Contact.