PEAK OF FLIGHT NEWSLETTER

ISSUE 514/FEBRUARY 4TH 2020

IN THIS ISSUE

FILLETS IN MODEL ROCKETRY

CYGNUS FREE PLAN
Available in This Issue!

https://www.apogeerockets.com/Rocket-Kits/Skill-Level-2-Model-Rocket-Kits/Aspire

www.ApogeeRockets.com
4960 Northpark Dr, Colorado Springs CO 80918
Ph# 719-535-9335

APOGEE COMPONENTS

PEAK OF FLIGHT

Fillets in Model Rocketry

By Bobby Potter and Tim Van Milligan

You've probably heard the word "fillet." In rocketry, it is pronounced fil-it with a "T" sound on the end.

We use the word "fillet" to describe the bead of glue or filler along the base edge of the fin where it joins to the tube.

There are two good reasons you might want to add a fillet to the rocket.

1) The fillet adds strength to the fin/body connection, making it harder for the fin to pop off the tube after a hard landing. Typically, the wider the fillet, the more strength it adds.

2) A fillet smooths out the airflow at the base of the fin, reducing the drag on the rocket. This is a special type of drag called "interference drag," and it occurs when two parts are joined together and form a corner. Air doesn't like flowing along a corner channel, and becomes turbulent. If you put a curved fairing into that corner edge, the air flows much more smoothly and the drag is reduced. So fillets can allow your rocket to fly higher and faster.

But on the flip side, there is a negative aspect to adding fillets to your rocket. The drawback is that you're adding weight to the rocket. Adding weight, as you know, will slow the rocket down and it won't go as high or as fast. Not only that, but the location of the extra weight is bad too. Normally, you're adding weight to the rear of the rocket, which moves the Center-of-Gravity (CG) rearward, which is destabilizing to the trajectory. If you add too much weight to the back of the rocket, your rocket could go unstable, and zig-zag across the sky when you launch the rocket.

So when you add a fillet to a rocket, you are trading off between increased weight, and reducing drag and adding strength. Most of the time, it is well worth it to add the fillets to the fins. So our recommendation is to put them on your rocket unless you are in an altitude contest where you need to reduce weight as much as possible.

In every case a fin fillet is going to improve the visual properties of your rocket after finish. Yes… a good fillet is like the attractive curves on a well-sculpted body. They just look "wow!" You can tell the amount of effort and the quality of a modeler's rocket by looking at how uniform the fillets are on the rocket.

FIGURE 1: COMPLETED, HIGH-QUALITY FILLETS USING EPOXY CLAY

Characteristics and Advantages of Fin Fillets

Fillets provide an essential boost to the strength of your fins and should be used on every rocket. This would include models that use the "through-the-wall" fin style. In those cases the fillets are more about aerodynamic drag reduction than actually increasing the fin hold. As mentioned above, fillets, apart from strengthening the bond between the fin and body tube, also provide some aerodynamic advantages.

Any epoxy, glue, or other adhesives do add mass to the rocket, albeit by a small amount. That being said, it is important to sand down any fin fillets to a uniform surface area and create a smooth surface for the air to flow over. This also helps to remove any excess epoxy which creates unneeded mass.

Balsa wood reinforcements can also help to reduce interference drag, provided they are filed (shaped) to the correct curvature.

Making the Right Adhesive Choices

For making fillets, several types of materials can be used. They can be lumped into two categories: those that add structural strength to the fin, and those that don't add strength, but are primarily for aerodynamic drag reduction.

For reducing drag without adding strength, some lightweight "fillers" are used:

Continued on page 3

About this Newsletter

You can subscribe to receive this e-zine FREE at the Apogee Components website www.ApogeeComponents.com, or by clicking the link here Newsletter Sign-Up

Newsletter Staff

Writers: Bobby Potter, Tim Van Milligan
Layout / Cover Artist: Matthew Martinez
Proofreader: Michelle Mason

Fillets in Model Rocketry

Continued from page 2

1.Carpenter's Wood Filler

2.Automotive Spot Putty

FIGURE 2: NON STRUCTURAL MATERIALS FOR MAKING FILLETS

The difference between the two is that carpenter's wood filler is water based, so it is safe to use around younger children, and you don't have to worry about getting it on your skin.

The automotive spot putty is petroleum-based, so you can get a chemical burn on your skin from prolonged use. It also has a very pungent odor, and should be used with adequate room ventilation. The advantage of the automotive spot filler putty is that it will harden faster as the solvents evaporate out, and they shrink a little bit less as they dry compared to the carpenter's wood filler.

Both are easy to work with, and sand very easily. They get so dusty when they are sanded that you should wear a particle mask when performing that task.

We also like using either of these products to feather out the edges of other fillets made from epoxy.

The strength-adding materials are all in the adhesives category. They are:

1. Liquid Epoxy (5-minute or 30-minute). They are sold at hardware stores.

2. Thickened epoxy - example would be the Glenmarc RocketPoxy: https://www.apogeerockets.com/Building_Supplies/Adhesives/G5000_RocketPoxy_Pint_Package

3. Ultra-thick, clay epoxy - like the Fix-It Epoxy Clay: https://www.apogeerockets.com/Building_Supplies/Epoxy_Clay/FIXIT_Epoxy_Clay

4. Wood Glue

5. Super Glue

FIGURE 3: FIX-IT EPOXY CLAY

Epoxy is strong; as a general rule it is one of the strongest adhesives on the market, and definitely a popular choice for model rockets. However, contrary to popular belief, it is not the right adhesive for every situation.

It all depends on the types of materials you are using. Any wood-based materials, including paper, hold much better with

Continued on page 4

Fillets in Model Rocketry

Continued from page 3

a simple wood glue. Any fillets meant to hold paper-to-paper, paper-to-wood, or wood-to-wood should be done with a wood glue as it penetrates the pores on the surface and provides a much stronger hold. In cases like these, wood glue creates a bond about 3x stronger than epoxy in the same situation. There is also something to be said about how easy wood glue is to work with.

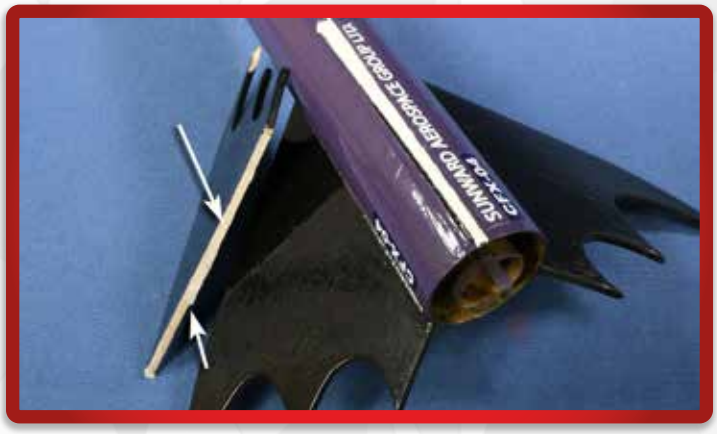

FIGURE 4: THE PAPER WILL BREAK BEFORE THE FILLET.

Usually when a fin breaks free from the rocket tube, it is not the glue that breaks. It is almost always the paper that delaminates. That is why a stronger adhesive like epoxy really doesn't add a lot of additional strength on paper-tube rockets. The paper will always break first, before whatever type of glue you use. You can't prevent the paper from breaking first, but you can lessen the odds of it happening by making wide fillets that extend far out along the tube from the fin. The more bonding surface, the stronger the fin will be.

The disadvantage of wood glue is that you can't build up a thick fillet for making a nice drag-reducing fillet. But for small model rockets up to D motor size, our first choice is wood glue for your fillets. In these situations, a small fillet is more than adequate for making a fairing, and will have plenty of strength.

You can always add a non-structural aerodynamic fairing over the top of the wood glue using the wood filler or the spot putty.

Where wood glue struggles is when you're trying to bond to a slippery or plastic part. For example, we wouldn't recommend wood glue being used to bond to Blue Tube, phenolic tubes, or fiberglass-reinforce-epoxy tubes. For that, you'll need a different adhesive.

If the tubes are small, we'd recommend super glues (sometimes called CA or CyA adhesive). You need to take precautions when using these glues to make fillets, because they bond to skin instantly, and they generate a lot of heat during their curing process. We don't recommend them for children because of this safety hazard.

To make fillets from super glues, you really need the thick variety. It will stay in place and won't run off. The downside it that it is hard to shape because it cures so fast, and you can't use your bare finger to smooth it out. We recommend wrapping your finger in a plastic bag (a polyethylene sandwich bag

Continued on page 5

Fillets in Model Rocketry

Continued from page 4

works fine) to smooth out the fillet.

But in general, super glue is expensive. So for larger fillets, we recommend switching over to epoxy.

Epoxy is really best in class for any fiberglass-to-fiberglass bonds.

When choosing your adhesive, you should also consider the viscosity and how long it takes for your adhesive to set. Some epoxies harden in a couple of minutes and can reach a fully set state in as little as 5 minutes. Although some experienced rocketeers may use this for fin fillets, it really requires you to have the process down cold, to muscle memory. For most of us, 2 minutes is just not enough time to make high quality, uniform fillets.

The viscosity directly translates to how easy it is to work with. If it flows too easily and quickly, you're likely to end up with a mess. This is not an unsurmountable problem, but anything with a low viscosity will require some extra time and effort in cleanup if you want your rocket to have a high quality finish.

We generally like the RocketPoxy for fillets because it has a little bit of flow, but mostly stays in place where you put it. That "flow" is nice, because it makes a shiny smooth surface as it settles in the fin root, and the edges really feather out nicely.

If you'd like to see how to use it by watching a video, our series on building fiberglass rockets shows the technique of laying down masking tape to define the edges of the fillets, and then peeling it away while the epoxy is still wet. See: https://youtu.be/VNS1Ao9nedA and https://youtu.be/n41KrwmkuP8.

Epoxy Clay

If you want the strength of epoxy with minimal clean-up during the process, then using an epoxy clay like the Fix-It is really nice.

Just tack down the fin with a drop of CyA adhesive. Then take a little of the clay-epoxy and roll it into a long snake. Push it into the root/tube intersection, and mold it into a fillet shape with your finger. To get a smooth surface, dip your finger into some alcohol and run it along the fillet. The next day, they're rock hard and ready for paint.

We have a video on our website showing the technique of using the Fix-It Epoxy at: https://www.apogeerockets.com/Advanced_Construction_Videos/Rocketry_Video_65

Since the epoxy clay doesn't flow, you have to pay particular attention to feathering out the edges so the fillet blends into the fin and into the tube. You can always come back the next day and smooth it over with some wood filler along the edges. After a little sanding, the edges will look perfect.

FIGURE 5: EPOXY CLAY FILLETS PRIOR TO PAINTING

Other Adhesives

Hot-Melt Glue is not listed above and for good reason. There are a many factors that make this type of glue a "No-No" for rocketry.

Continued on page 6

Fillets in Model Rocketry

Continued from page 5

First, it doesn't penetrate the pores of the wood or paper. It can snap off without warning.

Second, it can re-melt if it gets hot. You are putting it right next to a blistering hot rocket motor, right? Remember that motor there? Yea… bad idea. When the fins come off in flight, the rocket will immediately go unstable and other damage is likely to occur.

Third, hot glue settles quite fast, making it difficult to work with and your glue might harden before you have smoothed or have gotten everything how you want it. If you are using hot glue, you cannot use your finger to smooth out the fillet without risking pretty serious burns.

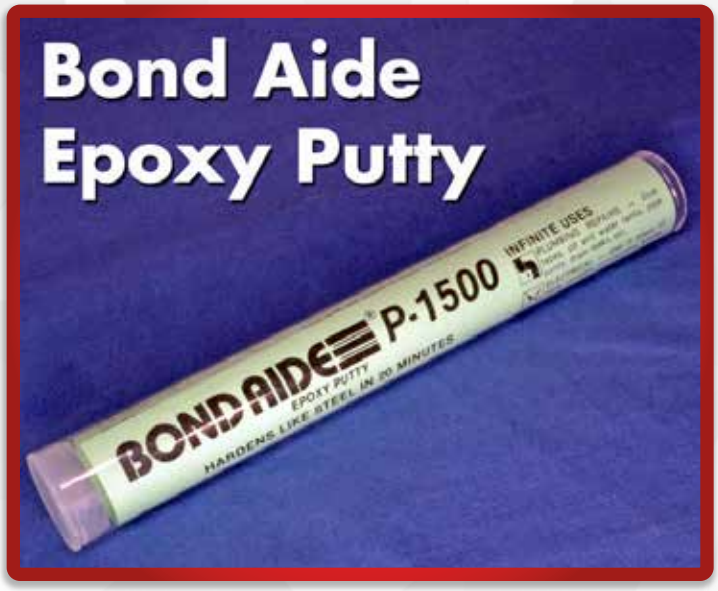

FIGURE 6: BOND AIDE, GOOD FOR INTERNAL FILLETS AND SHORT WORK TIME

How Big Should I Make My Fillets?

This is a complicated question and the true answer can really only be found by taking your particular rocket into a wind tunnel and testing multiple options and optimizing from there.

There are a few different factors to consider here. First is the surface area. The larger you make the fin fillets, the more surface area you are going to have. While this makes them stronger, it also increases your skin friction drag. On the opposing side of the force, having a fillet of the appropriate shape is going to reduce the interference drag, and the larger the fillet the more it can impact the interference drag in a positive way. They key to answering this question lies in the optimal balance between these two forces.

Since most of us don't have a wind tunnel, there are a few pretty good guidelines to run with when you are deciding how large to make your fillets.

1) A perfectly applied fillet should melt into the airframe and will look like a smooth transition between the body and fillet. We call this "feathering out the edges" so you can't tell where the fin ends and the fairing begins. Done correctly and after painting, they should be essentially invisible.

FIGURE 7: FILLETS SHOULD BE NICELY BLENDED INTO THE BODY

Continued on page 7

Fillets in Model Rocketry

Continued from page 6

2) The rounded front of a popsicle stick or the curvature of a PVC pipe (for large rockets) work well when smoothing out your adhesive. This should help you get a nice uniform fillet with the correct shape for maximum aerodynamic benefits.

3) Ideally the fillet will rise as high up on the fin as it does on the body tube.

4) The size, unless you are testing in a wind tunnel, really comes down to dealer's choice. If it looks like a smooth and natural transition between the body tube and fins, you've probably done a good job on your sizing choices.

FIGURE 8: DOWEL RODS WRAPPED IN SANDPAPER

Join Tripoli.org
Mention Apogee Components

FIGURE 9: SANDING FILLETS WITH THE APOGEE SANDING TEE

A Classic Method for Application

Applying fillets can be done a bunch of different ways, and depending on the rocket you are working with, you may want to explore some of those. However, we've detailed out a method that works well, is hard to mess up, and makes clean fillets. This is called the "classic method." It was shown in detail in an article by Matt Steele published in Peak-of-Flight Newsletter 327 (https://www.apogeerockets.com/education/downloads/Newsletter327.pdf), but we'll summarize it here.

FIGURE 10: COMPLETED FILLET TAPE GUIDES

Continued on page 8

CHECK OUT THE APOGEE YouTube PAGE
CLICK OR SUBSCRIBE HERE FOR OUR HELPFUL
AND INFORMATIVE HOW-TO VIDEOS
ON MODEL ROCKETRY
APOGEE COMPONENTS

Fillets in Model Rocketry

Continued from page 7

Step 1: Draw marking guides that define the outside edges of the fillets. If you want uniform fillets, you want to be consistent on the distance the guidelines are from the fins.

You can lay marking guides for your fillets a million different ways, but a popular and effective method just requires a felt-tip marker and a dowel rod. Note that the diameter of the dowel will determine how big your fillets will be. The larger the diameter, the bigger your fillets will be.

First cover your dowel rod in ink then place it where the fin and body tube meet. Slide the dowel rod along the seam and the ink should mark both the body tube and fin where they meet with the dowel rod. This will be the same height on the fin as it is on the body tube. Those markings, and everything inside them, should be covered by your adhesive fillet.

Step 2 - Tape (we recommend blue painters tape) around the body tube both above and below the fins along the marking guides.

Step 3 - Tape parallel to the fins along the guide marks you made on each of the fins.

Step 4 - Apply the epoxy along the entire length of the fin and on both sides. Use your finger, a popsicle stick, or any another tool at your disposal to smooth out the fillet, making it a uniform amount of glue and removing any excess.

Step 5 - Remove the tape while the fillet is still wet and allow the glue to dry.

Step 6 - Rotate to the next fin and repeat until all fins are complete.

Step 7 - Sand down the fillets to the correct curvature and a smooth finish. If you need to build up the fillet, apply a little bit of the wood filler or spot putty in the localized area and sand it smooth when it is hardened.

Diluting Epoxy to Make it Thinner

In almost every situation, one of the epoxies we have mentioned should meet your needs without changing the physical properties. That being said, some rocket builders can be very particular and make some changes to the characteristics of the epoxy mix. We here at Apogee don't see the need to do this often, but if you were interested, here are some things you could experiment with.

Acetone and other solvents such as denatured alcohol are used to thin the epoxy, making it more liquid in its properties. It should be noted that thinning out your epoxy reduces the strength. A general rule of thumb is for every 5% of thinner mixed into your epoxy, you reduce the bond strength by about 30%. Keep this in mind if strength is the most important criteria for your fillets. For this reason, you should keep this style of dilution very light, I wouldn't recommend any more than 5% thinner. This is more important to keep in mind when you are not using "through-the-wall" fins

That being said, there are some benefits to thinning some epoxies. When done correctly it can reduce the potential for air bubbles or streaking in your finished fillet. Visually it can aid your fillets a great deal, but it needs to be weighed against the loss of bond strength. Some hobbyists will not dilute their epoxy before application, but after it has been placed on the rocket they will run a wet (gloved) finger of acetone or alcohol over their fillet while smoothing it out. This leaves much of the epoxy touching the rocket at a high strength while still giving you the visual properties of some slightly diluted epoxy. This will give you an easier to work with adhesive so you can get a smooth, professional looking fillet.

Thixotropic Agents to Make Epoxy Thicker

Thixotropic agents are additives you can put into epoxy to make them thicker so they don't spread and run off your

Continued on page 9

Fillets in Model Rocketry

Continued from page 8

rocket as easily. Some epoxies like RocketPoxy already have thickening agents in them, so you don't need to add more.

FIGURE 11: ROCKETPOXY ALREADY HAS THICKENING AGENTS

An added benefit is you can either increase or decrease the density of the epoxy by the type of additive you put in.

To decrease the weight of the epoxy, the most common thixotropic agents are phenolic or glass microspheres. Not only do these bulking agents reduce the density of the epoxy, they make it easier to sand after it has set.

If you want to add a lot of strength to your epoxy, consider using a fiber filler. These take the form of fiberglass strands or plastic mini-fibers. The tensile strength of these strands help to provide a lot of strength in the epoxy, especially in the case of lateral forces that the epoxy was not necessarily laid out to specifically protect against. But since glass fibers are heavy, you will probably be increasing the density and therefore the weight of the epoxy on the rocket.

FIGURE 12: FIBERGLASS STRANDS

Cleanup and Finish

Giving your rocket a clean, polished finish is going to directly translate to the visual appeal of your rocket after painting. Depending on the adhesive you use and the care you put into applying it, you may likely have some cleanup to do before applying that first coat.

Unfortunately, once epoxy has hardened, acetone and other thinners aren't going to make an impact. Sandpaper is the obvious choice for sanding down the fillets into a uniform style, but for localized epoxy in unwanted locations sandpaper has some drawbacks. To overcome this obstacle, we recommend metal files. They come in various sizes and can be used to target and file down just the unwanted adhesive without causing additional damage to the finish of your rocket. Metal files are also much more durable than sandpaper, and epoxy is incredibly hard after setting.

An alternative to a metal file is to use a wooden dowel with

Continued on page 10

Fillets in Model Rocketry

Continued from page 9

sandpaper wrapped and glued around it. You can use several diameters of dowels to match the particular size fillet you're working with.

For small radius fillets, the Apogee Sanding Tee (https://www.apogeerockets.com/Building-Supplies/Tools/Apogee-Sanding-Tee) has a nice radius edge that you can wrap sandpaper over. It is very useful in sanding the fillets down to a uniform shape so that they look great. They are particularly useful if you have a long strake fin where it would be difficult to sand using a round file or wooden dowel wrapped with sandpaper.

FIGURE 13: METAL FILES

While sanding down the fillets, it is best to start sanding with a high grit and continually move into smoother and smoother pieces of sandpaper. You will know your fillet is done to the highest quality when it is perfectly smooth to the touch. The curvature of the finish should make it appear like a natural transition between the body tube and fins. If your fillets meet these expectations, once you paint your rocket it should have a clean, professional finish.

Conclusion

To a non-rocketeer, the paint scheme and the shape of the rocket may be the first thing that they notice about your rocket. But to your rocketry friends, it will definitely be the fillets that they see first. The character of your fillets is a telltale sign as to the overall quality and the effort you put into the construction of your rocket. Experienced modelers know just how much work it takes to make a good uniform fillet. They've been there, done that. So they just "know." You'll see them run a finger along the joint just to feel the subtle curves. It is very sexy. And they'll compliment you on them if you do it right. So do it right!

Join The NAR.org
Mention Apogee Components

The Cygnus Rocket Plan

CYGNUS

I was fascinated by an article on spin stabilization in the Peak of Flight Newsletter #228 (https://www.apogeerockets.com/education/downloads/Newsletter228.pdf) so I decided to put it to the test. What is the altitude trade-off between spin stabilization and a reduction in fin surface area? That complete experiment is yet to materialize, but the Cygnus, the mythical swan dominating the summer night sky, is my effort to achieve the highest altitude using just two fins slightly canted to spin stabilize the rocket . The 18mm body tube is the motor mount and with a C6-7, the Cygnus will touch its nose to just shy of 2000 feet. On a 1/2A6-2 it easily soars to well over 200 feet. It uses a unique tumble recovery when, at the motor ejection charge, it pops the body tube in half (which ruins any aerodynamics such that it can only tumble) and also ejects the spent motor casing which makes the descending rocket very light and tumble-worthy indeed. Not only does the Cygnus use spin stabilization with two fins, a unique tumble recovery, and an ejected motor at apogee, but it is possibly the simplest rocket design possible. Only six parts are required: Nose cone, body tube, coupler, fins, launch lug, and a 16” coupling shock cord. Glue it up and the Cygnus is ready to fly.

The build process is so simple that it can be completed in a single session. The 10.5” body tube is cut in two at 3.25”. The 1.5” coupler is glued into the short half of the body tube such that 5/8” is glued in and a clean 7/8” is sticking out. You can either poke a couple of holes and weave the shock cord into the coupler before gluing it in, or just glue the cord in with a tri-fold shock cord mount while being careful to not get any glue on the inside of the body tube as it is the motor mount.

The coupler serves double-duty as a coupler and as the engine block. The engine will only stick out an 1/8” but it should be ejected at apogee anyway. Poke the rest of the shock cord through the upper (long) body tube and attach and glue the cord to the nose cone. Glue the nose cone to the body tube. Glue on the fins with the top end of each fin canted 3/32” from vertical. Both fins must lean the same way, either both to the right or both to the left. Fillet them and you’re done. The coupler must be a smooth but fairly easy (but not fall off) fit into the top of the body tube. The motor should be a snug but not a ‘stuck’ fit into the aft body. The trick is they should be about the same ‘stiffness’ such that when the ejection charge blows, the body tube comes apart and the motor is simultaneously ejected.

Download RockSim file at https://www.apogeerockets.com/peak-of-flight-rocket-plans

***Caution:* Since this rocket kicks out the motor at ejection, take extra care to aim it down-range, away from spectators.**

A design by Kevin Cornwell

Continued on page 12

The Cygnus Rocket Plan

Continued from page 11

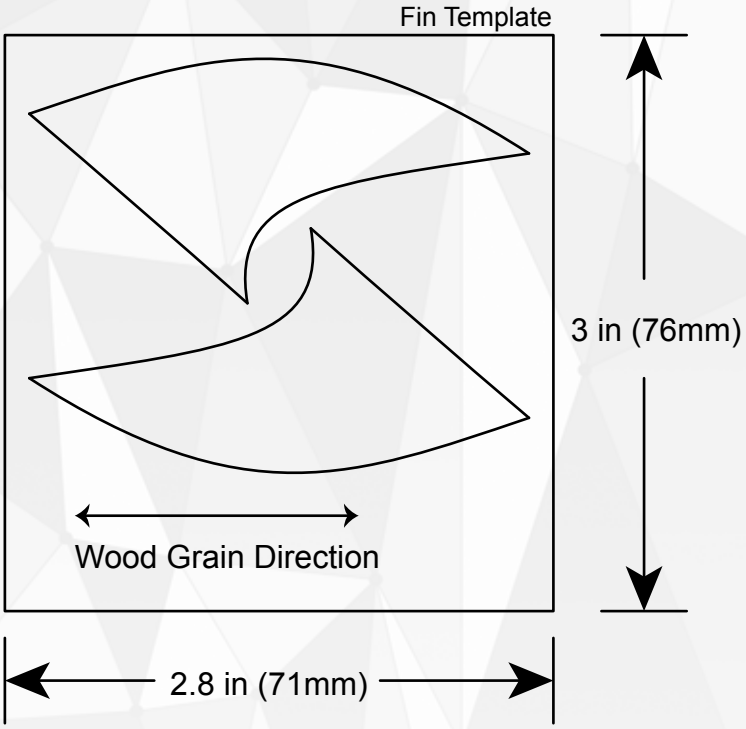

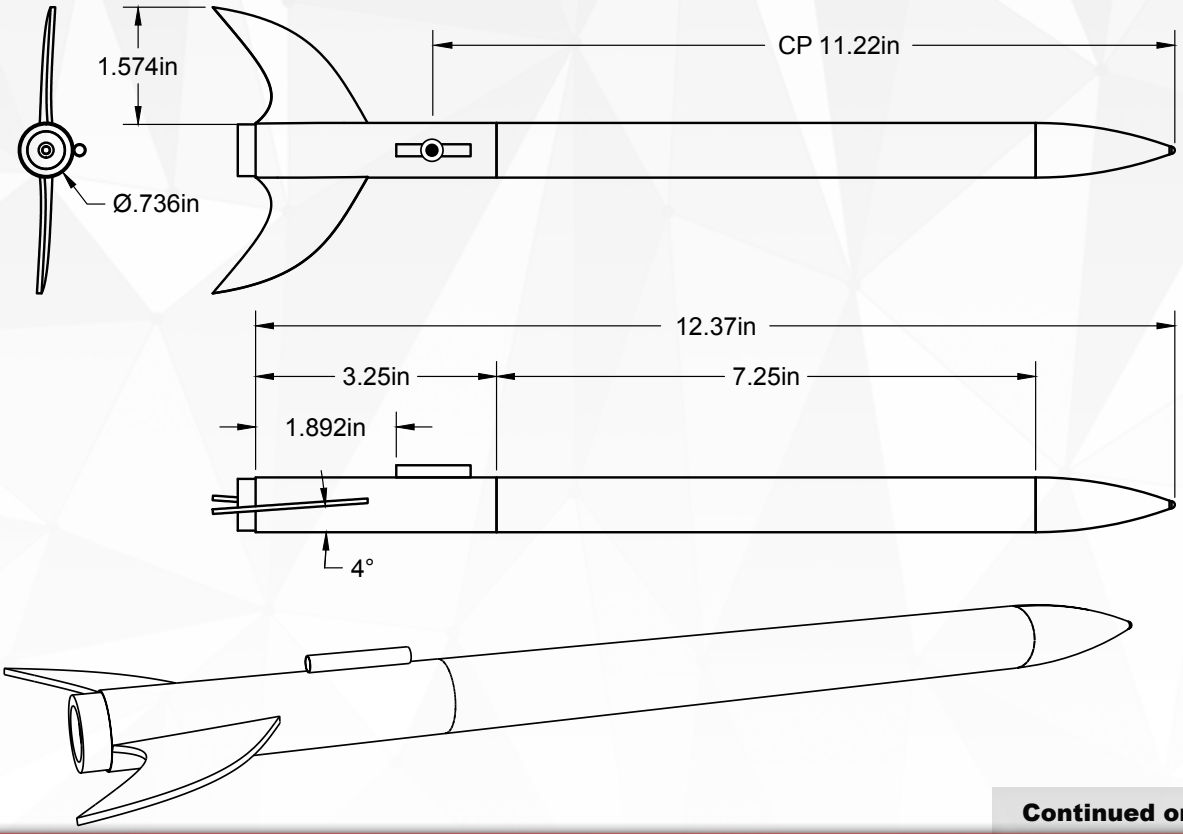

Continued on page 13

The Cygnus Rocket Plan

Continued from page 12

Apogee Components Parts List

Nose Cone: #19802 PNC-18C
1/8” Launch Lugs: #13052
Fin Stock: #14099
BT-20 Body Tube: #10086
Coupler: # 13015
16” Kevlar 100#: #30325
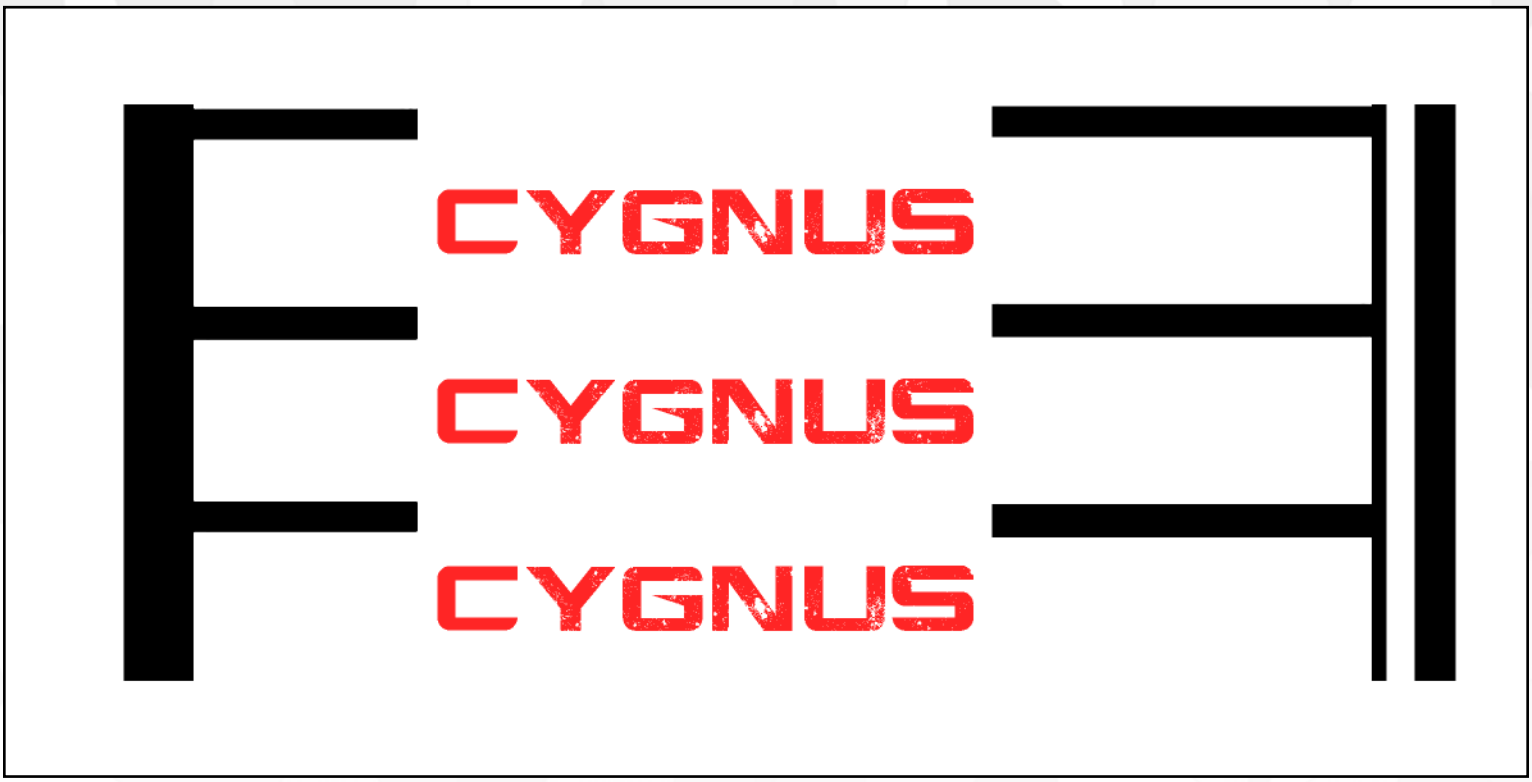
Decal Sheet
8” X 4”