PEAK OF FLIGHT NEWSLETTER

ISSUE 516/MARCH 3RD 2020

IN THIS ISSUE

DO YOU NEED A PERMIT TO FLY MODEL ROCKETS?

SAGITTARIUS A*
FREE PLAN
Available in This Issue!

https://www.apogeerockets.com/Peak-of-Flight-Rocket-Plans

www.ApogeeRockets.com
4960 Northpark Dr, Colorado Springs CO 80918
Ph# 719-535-9335

APOGEE COMPONENTS

PEAK OF FLIGHT

Do You Need a Permit to Fly Model Rockets?

By Bobby Potter

A common question for new people getting started in model rocketry is around regulations. More specifically, they ask: “do you need a permit to fly model rockets?”

The good news is that for most launches involving small model rockets, you don’t. In this article, we thought we’d go over what the regulations are regarding model rockets, and exactly when you hit that dividing line where you do need permission to launch.

The Federal Aviation Administration (FAA) is the governing body in the USA charged with the handling and oversight of model rockets. In our experience, of all the government oversight departments, the FAA has been very welcoming of the hobby, and in comparison with many other nations, they have allowed a lot of free space for the hobbyist community to operate.

FIGURE 1: FAA SEAL

That being said, the FAA has classified 3 types of rockets, each with separate requirements to ensure the safety of the public and so that air traffic is not adversely affected by your launch. Here are the types of rocket, designated by the FAA, and the rules which to follow. You can find links to these rules on the Apogee website at: https://www.apogeerockets.com/Legal.

Class 1 - Small Model Rockets

A class 1 model rocket is defined by the total engine impulse as well as the materials used in making it. Your rocket would fall into this class if it is made of only paper, wood or plastic and uses no more than 4.4 ounces of a slow burning propellant. It must also weigh less than 1,500 grams (around 3 pounds) to fall under Class 1. The Apogee Apprentice (https://www.apogeerockets.com/Rocket-Kits/Skill-Level-1-Model-Rocket-Kits/Apprentice) and Aspire (https://www.apogeerockets.com/Rocket-Kits/Skill-Level-2-Model-Rocket-Kits/Aspire) kits would fall under a class 1 rocket, as would most rockets using a G-size motor or smaller.

FIGURE 2: APOGEE ASPIRE

Continued on page 3

About this Newsletter

You can subscribe to receive this e-zine FREE at the Apogee Components website www.ApogeeComponents.com, or by clicking the link here Newsletter Sign-Up

Newsletter Staff

Writer: Bobby Potter
Layout / Cover Artist: Matthew Martinez
Proofreader: Michelle Mason

Do You Need a Permit to Fly Model Rockets?

Continued from page 2

Class 1 rockets are subject to just a few guidelines by the FAA, but these guidelines apply to any and all model rocket launches across the USA.

The first rule, that all rockets must be launched on a sub-orbital trajectory, is definitely the easiest to follow. To be on a suborbital trajectory the flight path of your rocket must, at some point, collide with the Earth. Since there is no way to pack enough power into the propellant to reach an escape velocity, every model rocket launch in history meets this requirement.

Rule number two is that, when launched, the rocket must not cross into a foreign territory unless an agreement is in place with the US and that nation. Due to the distance limitations of hobbyist rockets, this is not a large concern unless you are launching model rockets on the Canadian or Mexican borders.

In addition to these two rules, your rocket must also be unmanned and not create a hazard to any individuals, aircraft or property. These are definitely the hardest to follow. We've all wanted to grab hold of our Zephyr (https://www.apogeerockets.com/Rocket-Kits/Skill-Level-3-Model-Rocket-Kits/Zephyr) and ride it into the sunset; just know the FAA does not approve.

FIGURE 3: THE APOGEE ZEPHYR

The hazard restriction is actually a bit subjective. Legally, a hazard is defined as any agent that could cause harm to people, property or the environment. This does not mean it actually does cause harm, but could. If you think about an example, like water on tile, it makes a bit more sense. The puddle is a potential fall risk to anyone who walks across it, making it a hazard, even if no one walks across it.

Rockets can be seen in a similar fashion. If something goes wrong, is anyone at risk? If the answer to this is yes, then you are launching a hazard and the FAA could take action.

Continued on page 4

Do You Need a Permit to Fly Model Rockets?

Continued from page 3

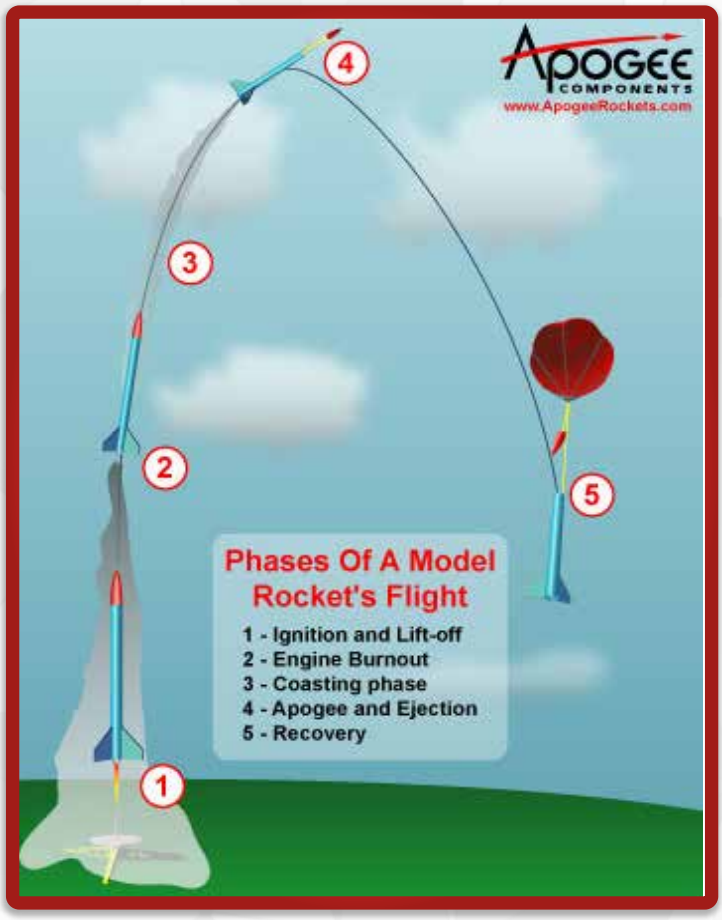

FIGURE 4: THE PHASES OF FLIGHT

Class 2 - High Power Model Rockets

Now we start getting into the serious business, and with great power comes great federal limitations on the activity.

The FAA classifies any rocket bigger than a Class 1 rocket, but still with an motor impulse of 40,900 Newton Seconds or less a class 2 rocket. This is what we generally call "high power rocketry" because they contain greater than 4.4 ounces of propellant or weigh more than 1500 grams. For some perspective, an impulse of 40,900 Newton Seconds would be considered a "P" engine. There are also few engines above the "G" class that contain less than 4.4 ounces of propellant. So from a practical point of view, any motor from H to O size would fall into class 2.

Any model rocket containing metal parts or any hard-to-break components would also fall into class 2, even if they are flying on an A or B motor.

All the same restrictions apply to class 2 model rockets that applied to class 1, with just a few additions.

To fly a class 2 rocket, you will also need to know a bit about where you are choosing to fly. There are some geographical limitations as well as some additional reporting requirements. A class 2 rocket requires, at all times, 5 miles of horizontal visibility. This means you cannot fire a class 2 rocket into any clouds, in any visibility-impacting weather, or between sunset and sunrise without FAA approval.

Join Tripoli.org
Mention Apogee Components

Continued on page 5

Do You Need a Permit to Fly Model Rockets?

Continued from page 4

FIGURE 5: HIGH-POWER ROCKET

With class 2 rockets, you must also be outside a 5 mile range of any airports or controlled airspace. You also need to be far away from any property or persons not involved with the rocket launch. This requires you to be at least 1/4 of your expected altitude or 1,000 ft away from an uninvolved party - whichever distance is greater.

These launches also require someone at least 18 years of age to be present and all reasonable precautions for fire prevention and reporting have been taken. For these reasons, NAR and Tripoli clubs sponsor qualified rocket launches across the nation and take care to make sure all the regulations are followed. We always recommend that you fly with a club because it is less of a hassle since they've already taken care of the paperwork necessary to get a waiver from the FAA.

Class 3 - Advanced Model Rockets

Okay, most of us can skip this section. To qualify as a Class 3 rocket, you need to be flying on a P class motor or above (only P motors are commercially available at this time) or be flying with an advanced guidance system. If you are flying a class 3 rocket, you have pretty much left the realm of hobbyist rockets. Your equipment costs are probably out of the hobbyist realm too.

To fly a class 3 rocket, some major reporting and safety procedures need to be met. This not only requires detailed analytics of the rocket, guidance systems, and avionics, but detailed procedures for abort protocols, mishap procedures and all potentially impacted areas.

You are required to provide in-depth documentation on any class 2 or 3 rockets requiring certification at least 45 days prior to the launch. A class 2 rocket would need this certificate or waiver if it does not meet all the other class 2 flight requirements detailed by the FAA guidelines.

Reporting and ATC Notification

Air Traffic Control (ATC) requires any class 2 rocket launches to be reported to them at least 24 hours prior to the launch. NAR and Tripoli, as well as a ton of other rocket clubs, report these rocket launches to the ATC on behalf of

Continued on page 6

Do You Need a Permit to Fly Model Rockets?

Continued from page 5

the members in attendance, but individuals launching on their own property or secluded parks almost certainly don't.

The FAA requires all the following information for any class 2 or 3 rocket launches.

1 - The name and address of the operator or the person designated as the event coordinator

2 - Date and time

3 - Radius of affected airspace in miles

4 - Longitude and latitude of launch site

5 - Highest affected altitude

6 - Duration of the activity

FIGURE 6: TARC (TEAM AMERICA ROCKETRY CHALLENGE) EVENT

This information must be reported to the ATC facility nearest to the rocket launch no less than 24 hours prior to the rocket launch. If you want to report your next rocket launch, you'll want to start with this document here: https://www.nar.org/high-power-rocketry-info/filing-for-faa-launch-authorization/

The FAA requires certifications or waivers for certain rockets that fall into class 2 and any rocket that falls into class 3. These additional requirements need to be met for any class 2 rocket that does meet all of the other safe launch criteria detailed by the FAA. In these cases, the following information must also be reported:

1 - The number of rockets

2 - Type of propellant

3 - Description of the launcher and recovery systems

4 - Launch site longitude, latitude and elevation

5 - Highest potential altitude

6 - Descriptions of any additional safety precautions / procedures that will be followed

Additional Restrictions and Requirements

The FAA reserves the right to place additional restrictions or requirements on your rocket launch. They also extend that right to state and local government entities. For this reason, regardless of where you launch, you'll want to check with your local fire department for any additional restrictions in your area.

Join The NAR.org
Mention Apogee Components

Continued on page 7

Do You Need a Permit to Fly Model Rockets?

Continued from page 6

FIGURE 7: EXAMPLE OF A TEMPORARY FLIGHT RESTRICTION IN CHARLESTON, SC DURING A PRESIDENTIAL VISIT.

Commonly these take the form of outright fire bans in high-risk zones, specific launch sites designated by the local officials, or additional flight limitations to prevent air traffic or public safety from being adversely affected. Here in Colorado, where our summers are hot and dry, we often face fire bans imposed by the city or county government that restrict ALL model rocket launches, including the Class 1 small model rockets.

Filing for FAA Launch Authorization

Starting a rocket club, have a launch site, or want to launch high power rockets on your own land? File for a waiver with the FAA.

These are pretty straight forward and the NAR has a great resource for you to get started. Here are their step-by-step instructions on filing for a launch waiver with the FAA. https://www.nar.org/high-power-rocketry-info/filing-for-faa-launch-authorization/

Continued on page 8

Do You Need a Permit to Fly Model Rockets?

Continued from page 7

National Fire Protection Agency

FIGURE 8: NFPA LOGO

In addition to the FAA regulations regarding model rockets and high-power rocketry, the National Fire Protection Agency (NFPA) also has a role to play in the equation. The National Fire Protection Agency details three standard codes for the use of model rocketry and high power rockets, NFPA 1122, 1125, and 1127.

NAR/Tripoli Certifications

NAR and Tripoli came to the conclusion that some of the high powered motors shouldn't be used by novices. In an effort to meet the safety standards set by the National Fire Protection Agency, they created a three-step certification process for high powered motors. These safety certifications allow for a slow progression of increasingly complicated projects, and we know these as high-power certification levels 1, 2 and 3.

These levels are not enforced by the FAA, but rather by the rocketry community collectively in order to be able to obtain insurance for rocketry launches. All manufacturers of rocket motors require you to get these certifications in order to fly with motors of corresponding sizes. The retailers (like us here at Apogee Components) also uphold these standards, and if the leader of your rocket club is worth their salt, they too will require you to have that certification before letting you fly a high power rocket on their field.

NAR Safety Code

The NAR Safety Code is the guiding document for a majority of the hobby. The rules outlined in the NAR Safety Code have led hobbyist rocketry to a long history of safe and smart rocket launches.

This code reiterates some of the FAA regulations in terminology that is more friendly to the average hobbyist. It details the limitations on materials used in construction, size, motors, ignition and recovery systems but it also includes some best practices to follow in regards to engine misfires and recovering your rocket after flight.

If you are a part of the hobbyist rocketry community, you already know that the NAR Safety Code is your number one resource, the bible with which our entire community functions. You can find the entire NAR Safety Code here: https://www.

Continued on page 9

Do You Need a Permit to Fly Model Rockets?

Continued from page 8

nar.org/safety-information/model-rocket-safety-code/

If you operate within the guidelines of the NAR safety code, you are within the regulations set by the government through the jurisdiction of the FAA as well as the NFPA.

ITAR and the EAR

So, many of us conduct our rocket launches inside the United States, a country which has been very welcoming and encouraging to hobbyists historically. Remember, we are talking about rockets, and in the hands of those with ill-will they could be misused with great effect.

That being said, there are some national regulations against taking motors overseas. ITAR stands for the International Traffic in Arms Regulations. The EAR is the Export Administration Regulations. Both of these entities regulate the traffic and export of arms, explosives and military technologies. As an international distributor of model rocketry components, we come against these regulations from time to time.

For the average citizen, these are not something you need to be fluent in. Even as a distributor, most of these regulations don't relate to us - but are rather designed to prevent military technologies from getting into unwanted hands.

That being said, model rocket motors are subject to these regulations, and it isn't just us that has to comply. If you are intending to take rocket motors overseas for a rocket launch, there are a couple things you should know.

The ITAR operates with something called the United States Munitions List (The USML). Anything on this list or a critical component of something on this list cannot be exported under threat of massive penalties (up to 1 million dollars and 10 years in jail).

Model rockets are mentioned in a couple of places, most of the time as specific exceptions allowing the export of model rockets. That being said, there are strict limitations on large motors, anything with more than 5 lbs of propellant. You cannot, under any circumstances, transport one of these motors outside of the United States. Remember, this includes critical components. You cannot even transport the materials required to make a motor with more than 5 lbs of propellant. This also applies to guidance systems and advanced avionics, specifically banning any model rocket (or the critical components of, including software) that can make in-flight adjustments to its trajectory.

These regulations get infinitely more complicated when you start taking into account foreign regulations on rocket motors and regulations in relation to public air travel. Motors of any size cannot be taken on passenger aircraft, not even in checked luggage. This leaves shipping them as the only option, by boat or by commercial aircraft. However, even those options are roads paved by miles of red tape. Then there are the regulations of each country regarding the import of rocket motors. There are many countries that don't allow a model rocket to be flown above 150 meters or a "C" class engine, so these regulations would need to be addressed on a case-by-case basis depending on where you intended to travel to.

It is not impossible for motors to be shipped overseas, however it is complicated and very expensive. Only motor manufacturers and a small number of individuals do it, so the resources available on how to accomplish this is limited. Apogee does not ship motors outside the United States because of these complicated regulations, nor can we advise you on how to do it without becoming liable ourselves. Due to this situation, we highly recommend you acquire the motors in your destination country or keep your flights safely within US borders.

The Sagittarius A* Rocket Plan

Download the ***RockSim*** design file for the Sagittarius A* at: https://www.apogeerockets.com/Peak-of-Flight-Rocket-Plans

Sagittarius A Parts List*

20068 - (1) BT-55 nose cone
10131 - (1) BT-55 x 8.5” body tube
(1) BT-55 x 18” body tube
13017 - (1) BT-55 coupler
12258 - (1) BT-55 coupler bulkhead and screw eye
12019 - (1) 24mm - BT-55 motor mount
24051 - (1) 24mm Aero Pack motor retainer
14099 - (1) 1/8” balsa sheet
10218 - (2) 4” switch bands
30326 - 12’ x 300 lb Kevlar cord
29093 - (1) 24” nylon parachute
13059 - (2) 1” x 3/16” launch lugs

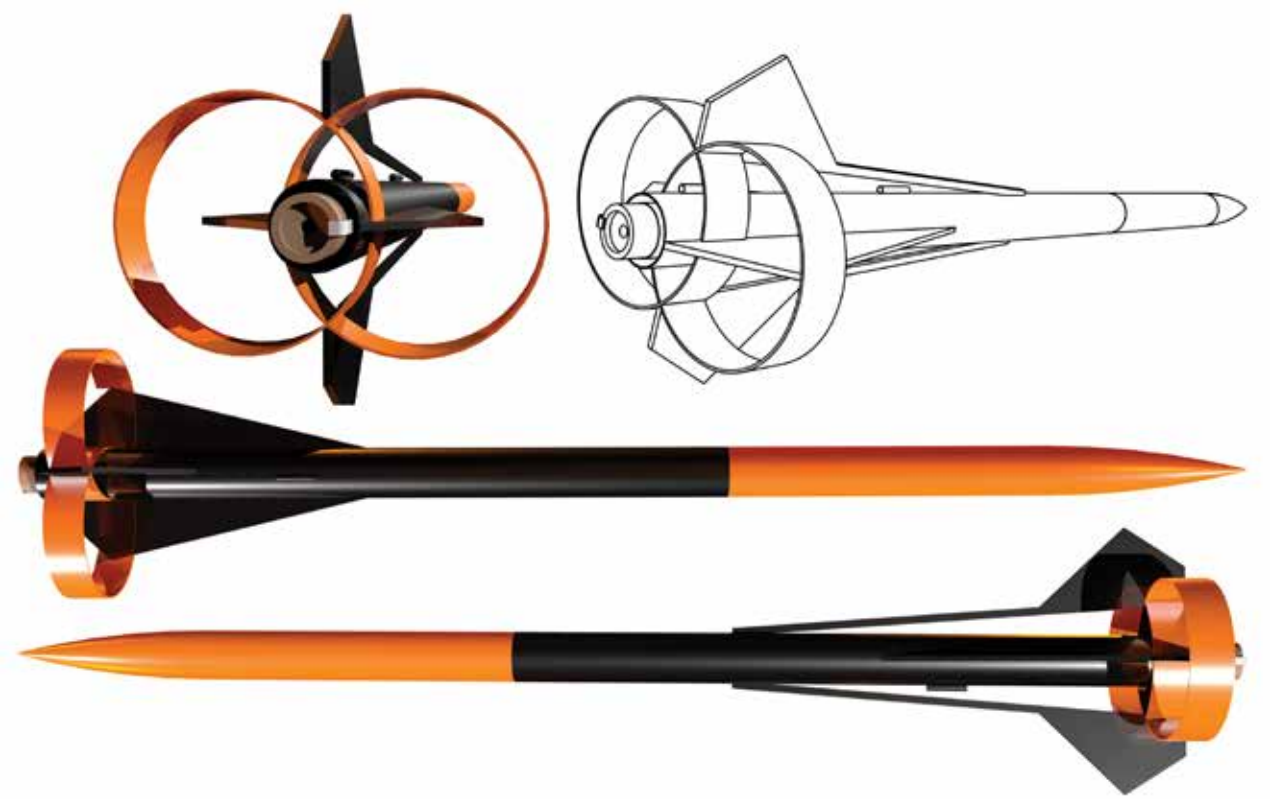

A Design by Steve Riegel

Continued on page 11

The Sagittarius A* Rocket Plan
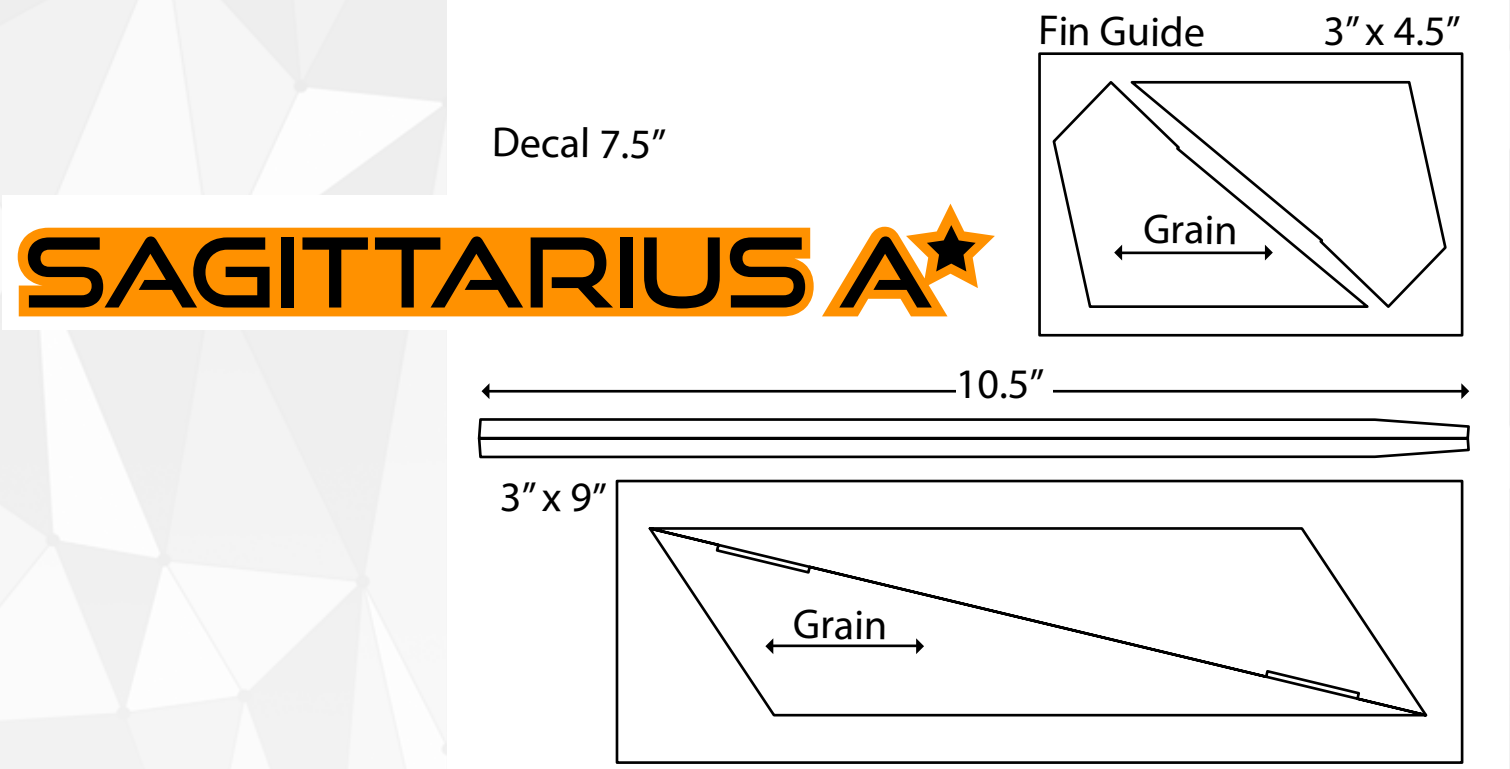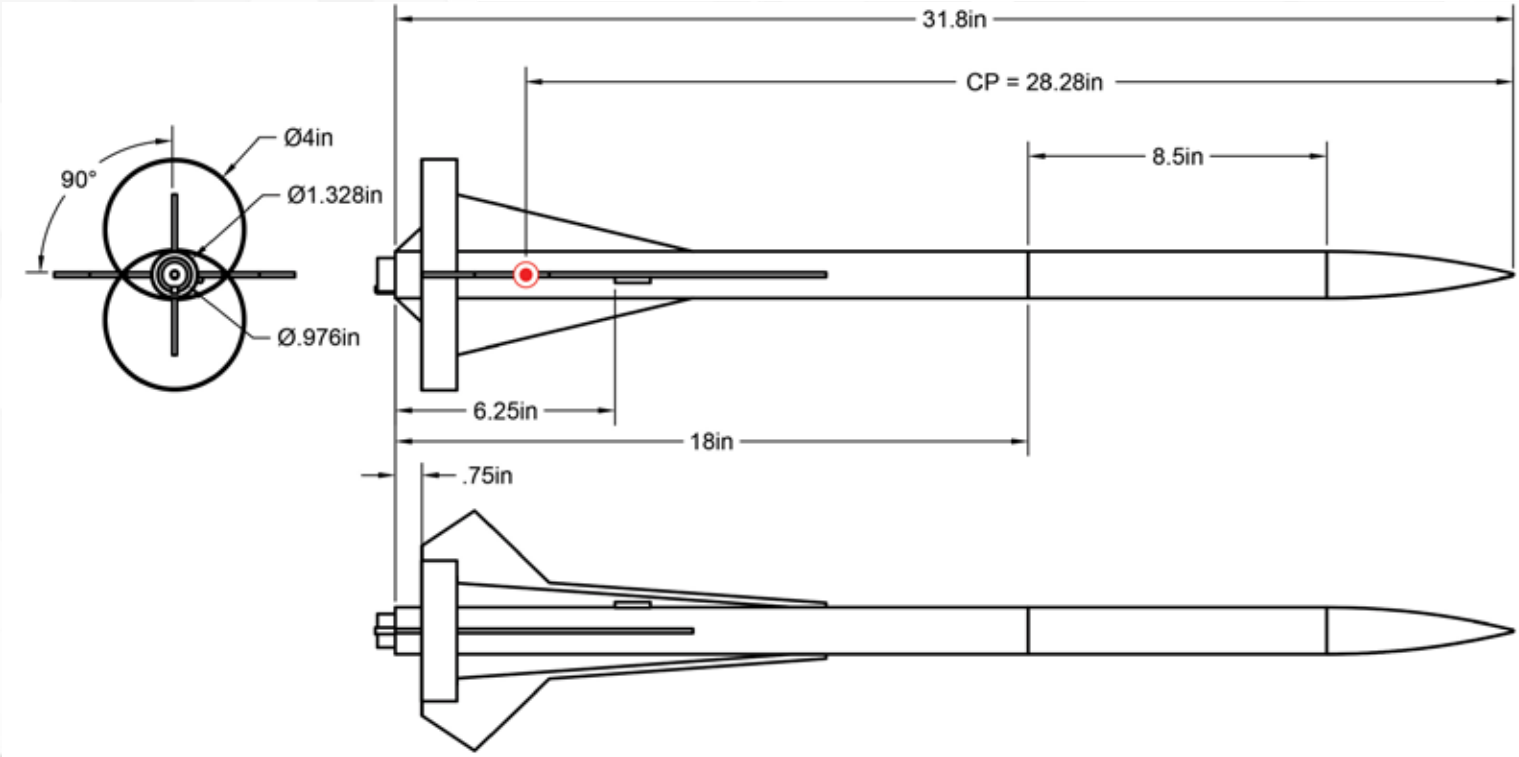
Continued from page 10