PEAK OF FLIGHT NEWSLETTER

ISSUE 519/APRIL 14TH 2020

IN THIS ISSUE

HOW TO PICK THE RIGHT RETAINER

SOLAR GRAPPLE
FREE PLAN
Available in This Issue!

https://www.apogeerockets.com/Peak-of-Flight-Rocket-Plans

www.ApogeeRockets.com
4960 Northpark Dr, Colorado Springs CO 80918
Ph# 719-535-9335

APOGEE COMPONENTS

PEAK OF FLIGHT

How to Pick the Right Retainer

By Tim Van Milligan

Are you wondering how to pick a motor retainer for your rocket? That is what we'll cover in this article. This is a common question that we get at Apogee, and it is our hope that with the information given here, you'll be able to cut us out of the loop when picking a retainer for your rocket.

What if you choose the wrong retainer?

Don't panic if you think you might pick the wrong retainer. The situation can usually be fixed.

There are two common mistakes. The first is picking a retainer that is too small to fit on the motor mount tube. The other is the opposite, picking one that is too large and fits sloppily on the tube.

If the retainer is too small, you have two options. The first is to sand down the end of the motor mount tube so the retainer will slide over the top of it. Just wrap some sandpaper around the end of the tube and sand it down until the retainer slips over it.

I know you may think that this will weaken the tube, but

FIGURE 1: SAND DOWN THE END OF THE TUBE SO THE RETAINER JUST FITS OVER THE END. THIS IS GROSSLY EXAGGERATED, AND YOU'LL NEVER NEED TO SAND OFF THIS MUCH MATERIAL.

not to worry. This typically works because you aren't usually taking enough material off the tube to really weaken it. For example, say you are putting on a retainer for a 29mm diameter tube. When you try to slide the retainer over the motor mount tube, it doesn't fit, but you do know the 29mm motor will go into the tube.

What I'm saying here is that if you sand down the tube so the retainer will just slip over, there will be enough tube thickness for sufficient strength. For example, in image 1, I exaggerated the amount of sanding of the tube - like it was a tube you found from somewhere other than purchased from a rocketry manufacturer. In most cases, if you purchased a tube from a rocketry manufacturer, the sizes will be approximately similar. In other words, if two different manufacturers' 29mm motor tubes were laying on a table, you wouldn't be able to tell the differences in diameters by simply looking at them. They're that close. The only real way to tell would be by measuring them with a caliper. So you really won't have to sand off nearly as much as I exaggerated in Image 1. That's why I can say with confidence: "Don't panic. This is fixable!"

Even if you did sand away that amount of tube material

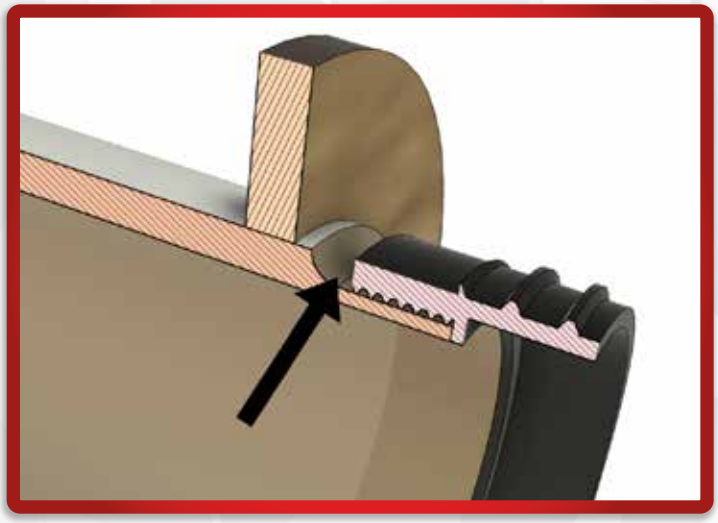

FIGURE 2: CUT-AWAY SHOWING THE RETAINER BODY SLID OVER THE END OF THE MOTOR MOUNT TUBE THAT HAS BEEN SANDED DOWN. THE GAP BETWEEN THE FRONT OF THE RETAINER AND THE SANDED PART OF THE TUBE IS THE WEAK SPOT.

in order to slim down the diameter enough for the retainer body to slide over the end, when you bond it on with epoxy, you can get the strength sufficient enough by putting on a good fillet of epoxy as shown in Image 3.

Continued on page 3

About this Newsletter

You can subscribe to receive this e-zine FREE at the Apogee Components website www.ApogeeComponents.com, or by clicking the link here Newsletter Sign-Up

Newsletter Staff

Writer: Tim Van Milligan
Layout / Cover Artist: Matthew Martinez
Proofreader: Michelle Mason

How to Pick the Right Retainer

Continued from page 2

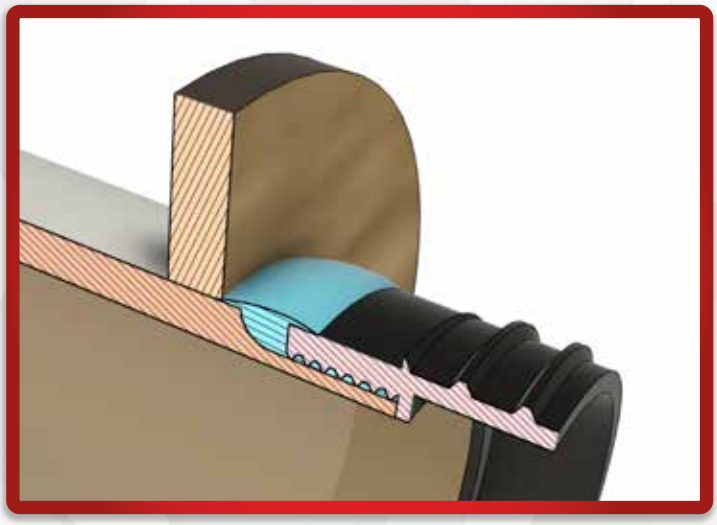

FIGURE 3: CUT-AWAY SHOWING WHERE THE EPOXY (BLUE SHADED AREA) SHOULD BE ADDED TO STRENGTHEN THE JOINT. MAKE SURE THE EPOXY OVERLAPS THE UNSANDED PORTION OF THE TUBE (OR THE CENTERING RING) AND THE TOP SURFACE OF THE RETAINER.

Notice in Image 3 that the epoxy overlaps the top side of the retainer body. This is in order to build up extra thickness over the body tube. It is like a cast to fix a broken bone. That's the key here, the epoxy has to overlap the good (unsanded) portion of the tube, and the front of the retainer.

This is actually a strong joint for the rocket. Let's try to imagine the forces acting here, and see what the mode of failure might be.

When the rocket is inserted into the tube and thrust is applied, the force direction is pushing on the rear edge of the tube (the orange shaded area in Image 3). This is a compressive force, and would try to buckle the tube. The buckled tube could bend either inward or outward. It can't buckle inward, because the rocket motor casing itself prevents that from happening. And the epoxy filling the gap is much like concrete in compression (the compressive strength of RocketPoxy is 14,800 psi). It is very strong. Only a wickedly hard impact force would break the epoxy - like hitting it hard with a hammer. It is unlikely that even a Vmax rocket motor, one of the fastest burning propellants, is going to be enough thrust to crack the epoxy joint.

On the other hand, when the ejection charge fires, the force is in the opposite direction. It is trying to stretch the epoxy joint under tension force. If that fillet on the outside is sufficiently thick, it will be strong enough to hold the retainer on to the thin part of the tube (the tensile strength of RocketPoxy is 7,600 psi). And even that thin part of the tube is adding to the strength of the joint.

The point of this discussion is that if you happen to pick a retainer that is too small and you have to sand down the tube a lot to get the retainer on, it will still be strong enough once you put an epoxy fillet over the top like shown in Image 3. You've fixed it, and nobody will ever know you goofed. Actually, what I think will happen is that you'll brag to your friends how you are skilled enough to fix the condition. And honestly, I do think that is something worth bragging about. Not everyone has those skills and "can-do attitude."

The other option you have if the retainer you pick is too small is to simply return the retainer to where you purchased it. That to me should be rare. It only should happen if you bought a 24mm retainer and the rocket had a 29mm engine mount tube. There is no way to fix that.

A Big Sloppy Retainer

The other fear people have is that they might pick a retainer that is too large and fits sloppy when you put it over the tube, like the one shown in Image 4. Again… this is fix-

Continued on page 4

How to Pick the Right Retainer

Continued from page 3

able. It's actually an easier fix than sanding away the tube as discussed above.

What we'll do is to use epoxy again to fill the gap and make a strong joint, like shown in image 5.

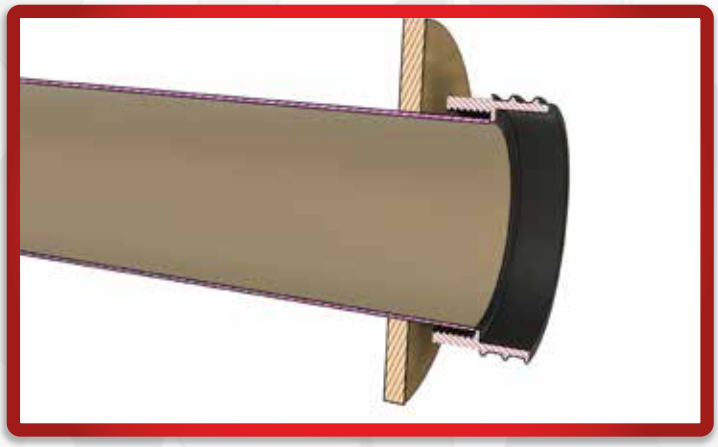

FIGURE 4: CUT-AWAY SHOWING A RETAINER BODY THAT IS A BIT TOO BIG, AND THE TEETH ON THE FRONT SECTION DON'T CONTACT THE TUBE.

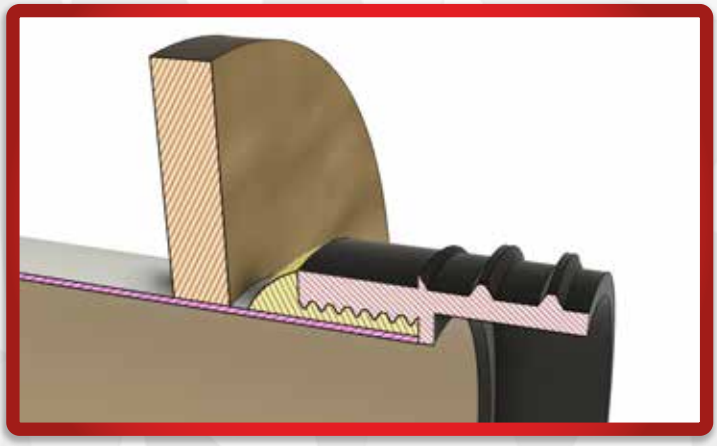

FIGURE 5: IN THIS CUT-AWAY, THE GAP ON A LOOSE FITTING RETAINER CAN BE FILLED WITH EPOXY (SHOWN IN YELLOW).

But first, we have to make sure the retainer is centered (concentric) with the engine mount tube. The worst case would be for the retainer to be bonded off-axis, and then we won't be able to slide the rocket motor into the tube. This is shown in Image 6.

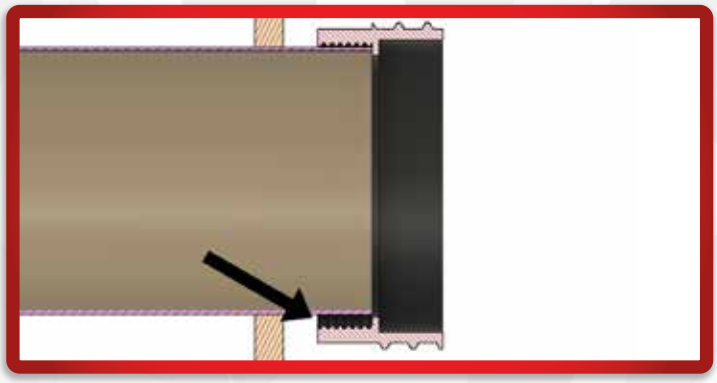

FIGURE 6: CUT-AWAY SHOWING AN OFF-CENTER RETAINER BODY. THE INNER-TEETH ON THE UPPER SIDE OF THE RETAINER BODY ARE TOUCHING THE TUBE, BUT THERE IS A GAP WHERE THE TEETH DON'T TOUCH AT THE BOTTOM OF THE IMAGE.

Continued on page 5

How to Pick the Right Retainer

Continued from page 4

To center it while the epoxy is hardening, we'll use a rocket engine. So first, dry fit everything together by sliding the rocket engine through the retainer body and into the tube. Wiggle the retainer up and down to see if there is any slop. Usually with the motor installed, the retainer has very little wiggle on the end of the motor mount tube.

FIGURE 7: TEST FIT THE ROCKET ENGINE INTO THE MOUNT BEFORE ADDING ANY EPOXY. WIGGLE THE RETAINER TO SEE IF THERE IS STILL ANY SLOP.

If there is still any slop, what we can do is shim around the thrust ring of the rocket engine with masking tape to make sure that the retainer is dead concentric with the engine mount tube. See Image 8. Just don't make it so tight that you can't remove the rocket engine. We'll need to do that when we apply the epoxy.

Join The NAR.org
Mention Apogee Components

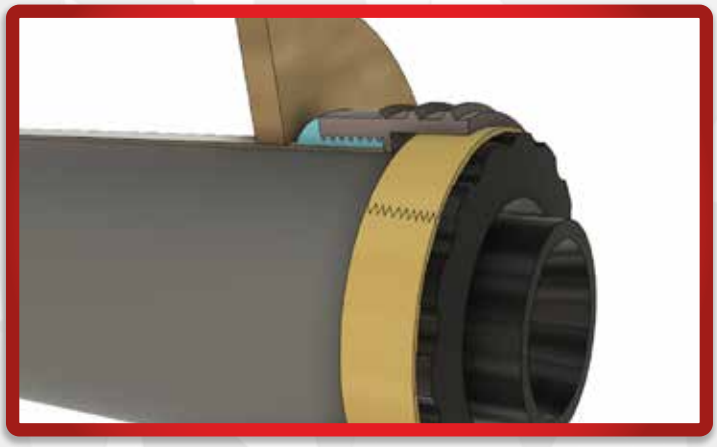

FIGURE 8: MASKING TAPE WRAPPED AROUND THE THRUST RING ON THE ROCKET ENGINE WILL PERFECTLY CENTER UP THE RETAINER BODY.

When you have everything fitting perfectly, now you can bond on the retainer body using epoxy. This is the tricky part, because you have to leave the rocket engine inside the tube until the epoxy is hard. But you don't want to accidentally bond the casing into the motor tube.

Slather up some thick epoxy (like the RocketPoxy - https://www.apogeerockets.com/Building_Supplies/Adhesives/G5000_RocketPoxy_Pint_Package) on the outside of the end of the motor mount tube, and inside the front end of the retainer body. Slide the rocket engine into the retainer body. A little bit of epoxy will probably ooze out and run on the rocket motor case. We'll clean this off in a minute, so don't worry about it right now.

At this point, I recommend that you turn the rocket upside down so gravity helps you when you slide the retainer body into the back of the motor mount tube.

As soon as the retainer is on the tube (the epoxy is still wet at this point), pull the rocket motor out of the retainer body. Because it is upside down, the retainer should stay

Continued on page 6

How to Pick the Right Retainer

Continued from page 5

centered as you pull the motor out. If you had the model laying horizontally, as you pulled the motor out, the retainer would sag to one side of the tube like in Image 6. This is what we're trying to prevent by having the rocket nose-down.

Once the motor is out, clean up any wet epoxy that oozed out onto the motor casing and on the inside of the motor mount tube and inside the end of the retainer body. You can use alcohol and paper towels to clean up the excess epoxy.

After all the wet epoxy is cleaned off, slide the rocket motor back into the rocket to make sure that the retainer stays concentric with the motor tube. Let it harden in this position. But I'd check the assembly every fifteen minutes or so to make sure that you can still easily remove the motor casing in case any other epoxy oozed out.

Picking the Right Size Engine Retainer

Now that you know how to fix either a loose fitting or tight fitting retainer, you can relax a bit when it comes to finding the one that is a "perfect fit." It is rare in the real world that anything is ever a perfect fit anyway. Now you have the skills and the knowledge to make it perfect!

At this point, when selecting a retainer, what we're really getting is one that is going to require the least amount of work needed to achieve a perfect fit. One that doesn't require "a LOT" of sanding, nor a lot of epoxy to fill the loose fit. You can expect a little bit… we just want to avoid doing "a LOT" of work. I'm just as lazy as you are.

Let's try to simplify the process of picking an engine retainer. Here is the step-by-step process I recommend:

STEP 1: If you need one for a rocket kit on the Apogee website, first check the kit page to see if we listed one there. It would be listed in the "tools" section. To quickly get to the tools section of any kit page, you will find a "button bar" right below the "Add to Cart" button near the top of the page. If you click on the "tools" button, you'll scroll quickly to the right area of the kit page.

STEP 2: If the kit page does not list a specific retainer, you'll still go to the kit page to get some additional information. First read through the description of the kit, and pay particular attention to the parts section. We try to write about what method of motor retention that the kit has. It may be an engine hook, or it may already have a retainer, like some of the Aerotech rocket kits have. So your job may be done and you don't need a different retainer. But notice at the top of the kit page what diameter rocket engine it uses.

STEP 3: With the motor diameter information from the previous step, you can now go to the retainer page (https://www.apogeerockets.com/Building_Supplies/Motor_Retainers_Hooks) and click on the diameter of retainers you wish to use. Let's say, for example, you are looking for a 29mm retainer for something like the Apogee AeroDactyl rocket kit. You'd first click on the 29mm retainer image and see all the 29mm retainers we have at Apogee.

As you scroll through the list, pay attention to the "Manufacturer" of the tube that the retainer will fit. So if you're looking for the retainer for the AeroDactyl kit, you want a retainer that says it will fit Apogee tubes (since Apogee Components is the manufacturer of the AeroDactyl). In this case, you'd find that the Aero Pack 29L will fit Apogee's tubes. In other words, the gist of this step is to match the tube's manufacturer with the retainer on our website that would fit tubes made by specific manufacturers.

STEP 4: If you still haven't selected a retainer from the steps above, now you have to do some work. That means you have to take some measurements and do a little more digging into the information on the Apogee website. An example of this may be that you're probably trying to fit a

Continued on page 7

How to Pick the Right Retainer

Continued from page 6

retainer onto a tube you found somewhere and you don't know who made it.

You have to know two measurements:

1. The outside diameter of the motor tube
2. The Retainer Body I.D. for the motor mount tube (see the chart below)

If you know who made the tube, you can get the outside diameter measurement from the Apogee website. But if you don't know the manufacturer, you'll have to measure the tube diameter yourself.

FIGURE 9: MEASURING THE OUTSIDE DIAMETER OF THE TUBE WITH A DIGITAL CALIPER.

Join Tripoli.org
Mention Apogee Components

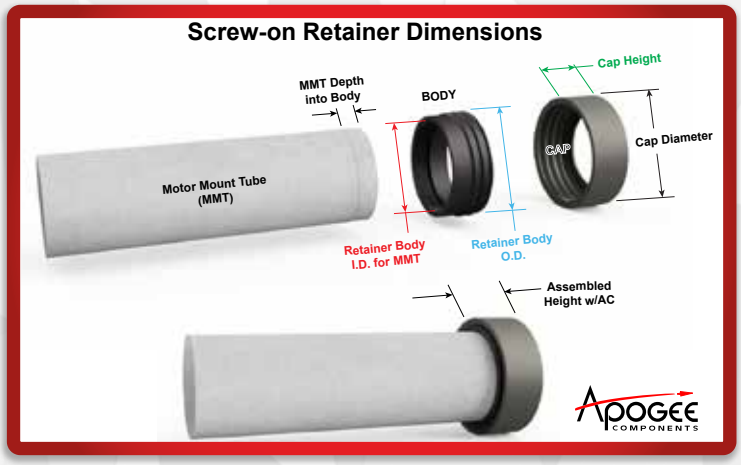

FIGURE 10: COMMON DIMENSIONS OF SCREW-ON RETAINERS.

Once you know these two dimensions, you can use the chart here to try to find a retainer that will fit on it.

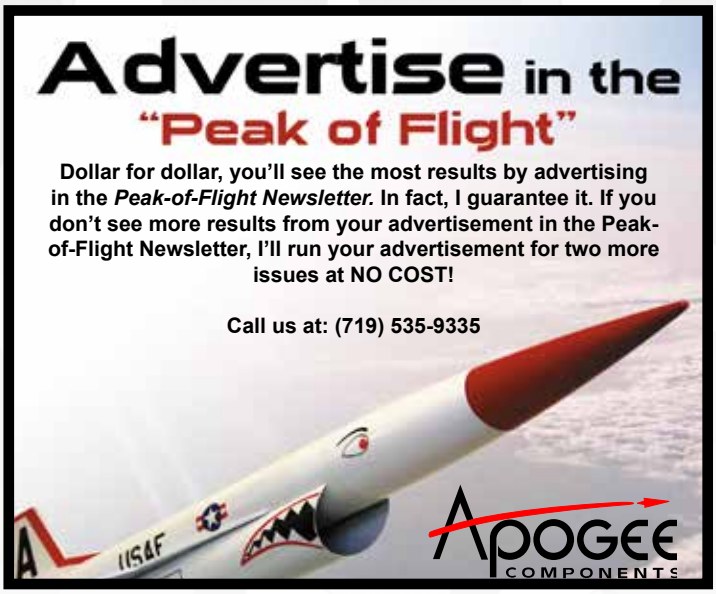

Continued on page 8

How to Pick the Right Retainer

Continued from page 7

Nominal Size (mm)	Apogee's Part Number	Manufacturer's Name	Weight (grams)	Retainer Body ID for MMT (inches)	MMT Depth Into Body (inches)	Retainer Body O.D. (inches)	Cap Diameter (inches)	Cap Height (inches)	Assembled Height (inches)
18	24022	Estes 18mm	2.33	0.740	0.258	0.880	0.999	0.448	0.564
18	24056	Rocketarium	3.7	0.745	0.182	0.872	0.955	0.256	0.411
24	24050	Rocketarium	7.5	0.982	0.255	1.118	1.235	0.334	0.545
24	24051	Aeropack RA24L	6.8	0.976	0.25	1.04	1.225	0.5	0.67
24	24052	Aeropack RA24L2	6.8	1.000	0.25	1.04	1.225	0.5	0.67
24	24053	Aeropack RA24P	6.8	1.045	0.25	1.04	1.225	0.5	0.67
24	24021	Estes 24mm	8.1	1.008	0.356	1.218	1.430	0.606	0.752
29	24060	Aeropack RA29L	15.9	1.215	0.25	1.37	1.575	0.55	0.6
29	24062	Aeropack RA29L2	22.7	1.225	0.25	1.37	1.575	0.55	0.6
29	24061	Aeropack RA29P	14.8	1.27	0.25	1.37	1.575	0.55	0.6
29	24020	Estes 29mm	13.6	1.220	0.455	1.460	1.744	0.741	0.861
29		Aerotech 29mm	27.2	1.239	0.472	1.448	1.625	0.746	0.825
38	24062	Aeropack RA38L	22.7	1.63	0.375	1.75	1.96	0.5	0.85
38	24063	Aeropack RA38P	21.1	1.65	0.375	1.75	1.96	0.5	0.85
54	24066	Aeropack RA54L	40.6	2.265	0.50	2.4	2.62	0.6	1.0
54	24067	Aeropack RA54P	40.6	2.278	0.50	2.4	2.62	0.6	1.0
75	24054	Aeropack RA75L	95.0	3.180	0.75	3.26	3.65	0.97	1.4
75	24055	Aeropack RA75P	96.4	3.125	0.75	3.26	3.65	0.97	1.4

Here is the key concept: The "ID for MMT" should be just slightly larger than the tube's outside diameter. In an ideal world, I'd say a difference of .006 inches would be really good. You probably won't get that exact. But since you know how to adjust the fit from the information above, don't let this worry you.

To repeat, the "ID for MMT" that you see on the chart should be just slightly larger than the outside diameter of the tube that you measured. This will give you a retainer that doesn't require sanding of the tube, so there will be less work when installing it on your rocket.

For example, in Image 9, the outside diameter of the tube shown is 1.201 inches. Looking at the selection chart for 29mm retainers, we'll try to pick the one that would have the closest fit to "perfect". Previously, I mentioned adding 0.006 inches to the outside diameter. In this case, adding 0.006 inches to 1.201 inches is 1.207 inches. Now look at the chart and find the nearest retainer that has a "Retainer Body ID for MMT" that is closest to that number.

The closest one in this example is Apogee Part Number 24062, which is the Aeropack RA29L. It has an ID of 1.215 inches.

It will have a tiny amount of wiggle when you put it on the tube, but once you apply a smidge of epoxy, it will snug right up and be perfect.

See how simple it is to pick a retainer? Now you can do it yourself!

But do know that you can get any of the retainers in that 29mm category to fit that tube, so don't fret about absolutely having the closest one.

Other Options for Motor Retention

If you don't feel confident measuring a tube diameter, know that screw-on retainers aren't the only option for engine retainers. There are a lot of different choices available.

We also have the Flat Bottom Retainers like shown in Image 12 (https://www.apogeerockets.com/Building-Supplies/Motor-Retainers-Hooks/Flat-Bottom-Rocket-Motor-Retainers) or a Plate Retainer (https://www.apogeerockets.com/Building_Supplies/Motor_Retainers_Hooks/Plate_Retainers_external_disks) that you can choose from. Both of these are less dependent on the exact tube diameter, and they work just as well. And both of these retainers can also be added to the rocket after it is built and painted.

Continued on page 9

How to Pick the Right Retainer

Continued from page 8

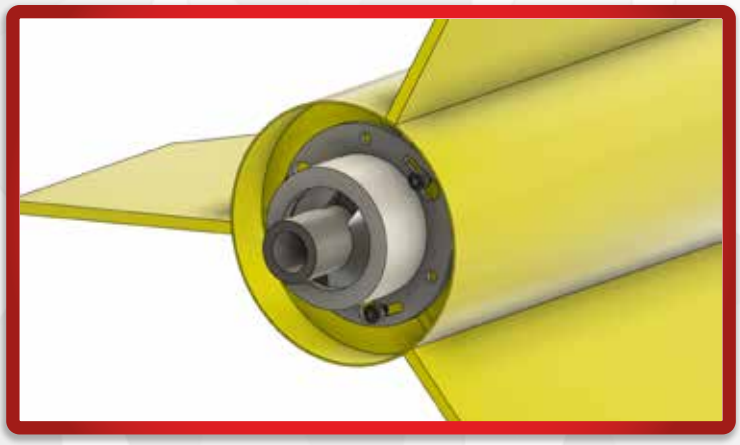

FIGURE 11: FLAT BOTTOM ENGINE RETAINER IS LESS DEPENDENT ON THE EXACT MOTOR MOUNT TUBE DIAMETER.

If your rocket is still in the "unbuilt" stage of construction, you can use a threaded rod (https://www.apogeerockets.com/Building-Supplies/Misc-Hardware/1-4-20-x-9-Threaded-Rod-1-pk) type retainer. I call it the "Cosmodrome Retainer," because they are the manufacturer that uses this style in all their rocket kits (https://www.apogeerockets.com/Cosmodrome_Rocketry).

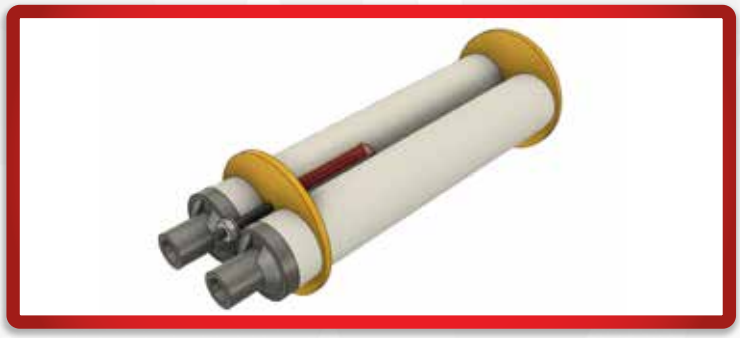

FIGURE 12: THE THREADED ROD RETAINER POPULARIZED BY COSMODROME ROCKET KITS.

If you still want us at Apogee to select a screw-on retainer for you, please know that this is a service, but not a "free service." We will have to charge a service fee because of the time it takes to research your particular situation. To be honest, we already gave you all the tools and knowledge you need to choose a retainer in this message. You can do it!

About the Author:

Tim Van Milligan (a.k.a. "Mr. Rocket") is a real rocket scientist who likes helping out other rocketeers. He is an avid rocketry competitor and is Level 3 high power certified. He is often asked what is the biggest rocket he's ever launched. His answer is that before he started writing articles and books about rocketry, he worked on the Delta II rocket that launched satellites into orbit. He has a B.S. in Aeronautical Engineering from Embry-Riddle Aeronautical University in Daytona Beach, Florida, and has worked toward an M.S. in Space Technology from the Florida Institute of Technology in Melbourne, Florida. Currently, he is the owner of Apogee Components (http://www.apogeerockets.com) and also the author of the books: Model Rocket Design and Construction, 69 Simple Science Fair Projects with Model Rockets: Aeronautics and publisher of the "Peak-of-Flight" newsletter, a FREE ezine newsletter about model rockets. You can email him by using the contact form at https://www.apogeerockets.com/Contact.

If you still want us at Apogee to select a screw-on retainer for you, please know that this is a service, but not a "free service." We will have to charge a service fee because

Solar Grapple Rocket Plan

KEVIN CORNWELL, THE DESIGNER OF THE SOLAR GRAPPLE.

The Solar Grapple

Every day, scientists working at the L3 solar laboratory on the far side of the sun use a rocket grapple to dip into the solar plasma and load samples into the payload bay. The samples dissipate like blue ice into the ether so they must work fast. The Solar Grapple is their vehicle of choice as it is sleek, it carries a large payload, and it can withstand the fiery furnace of the sun. The aft bell housing shields the rocket engine from the solar extremes while the sturdy fins with their heat ablative coating provide excellent stability while maneuvering through the solar wind.

The Solar Grapple is a simple to build payload rocket using 24mm motors. Flights from 250' on BP motors to over 1700' on composites are easily attainable. Setting up the bell housing build may not be obvious. Dry fit the aft centering ring to the motor mount, then push the ring forward along the mount using the bell housing until the aft end of the motor mount is even with the aft end of the bell housing. Using a pencil, mark the centering ring's position on the motor mount. Glue and fillet up the motor mount and centering rings. When ready, prepare with glue the aft end of the body tube in the normal way before inserting the assembled motor mount. Push the motor mount in just till the aft ring is inside, then use the bell housing to push the assembly into place. The bell housing will only slide into the tube so far and it must touch the aft ring. Remove the bell housing. Let the glue dry, and don't fillet the aft centering ring. Using model cement or epoxy, coat the bell housing shoulder and the inside of the body tube with glue and insert the bell housing. It should be flush and snug up against the aft end of the body tube. Let it dry. The fins are 3/16" balsa. For strength, glue-up two layers of 3/32" balsa. An alternative would be to use 3/16" balsa stock and paper laminate them. Assemble the rest of the rocket as normal.

Continued on page 11

Solar Grapple Rocket Plan

Continued from page 10

Download the ***RockSim*** design file for the Solar Grapple at: https://www.apogeerockets.com/Peak-of-Flight-Rocket-Plans

Solar Grapple Parts List

20021 - (1) Use 8.25” Nosecone, Use engine bell
10141 - (1) BT-60
13057 - (1) Launch Lugs
15016 - (1) Centering Rings
29092 - (1) 18” Parachute
10100 - (1) 24mm MT
12261 - (1) Bulkhead
13019 - (1) Coupler
30328 - (1) Shock Cord
30325 - (1) Shock Leader
13032 - (1) Engine Block
24048 - (1) Motor Hook
14097 - (1) Fin Stock (Doubled for 3/16”)

Motor Recommendations

Motor	Altitude	Velocity
C11-3	250	83
D12-5	605	139
D15T-6	790	171
E20-7	1424	282
F39T-9	1710	386

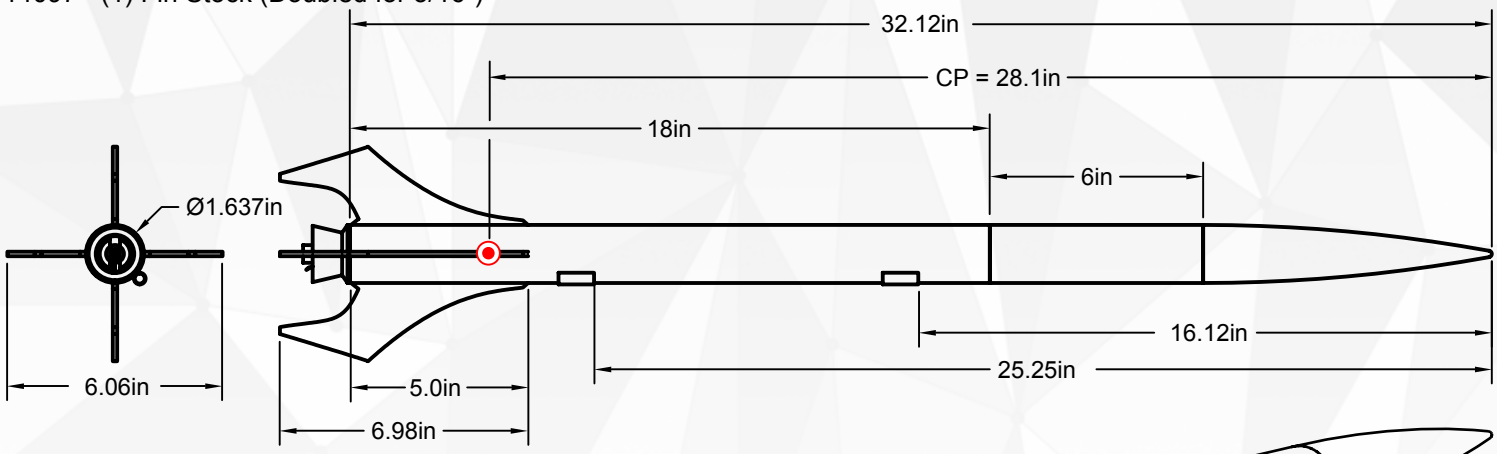

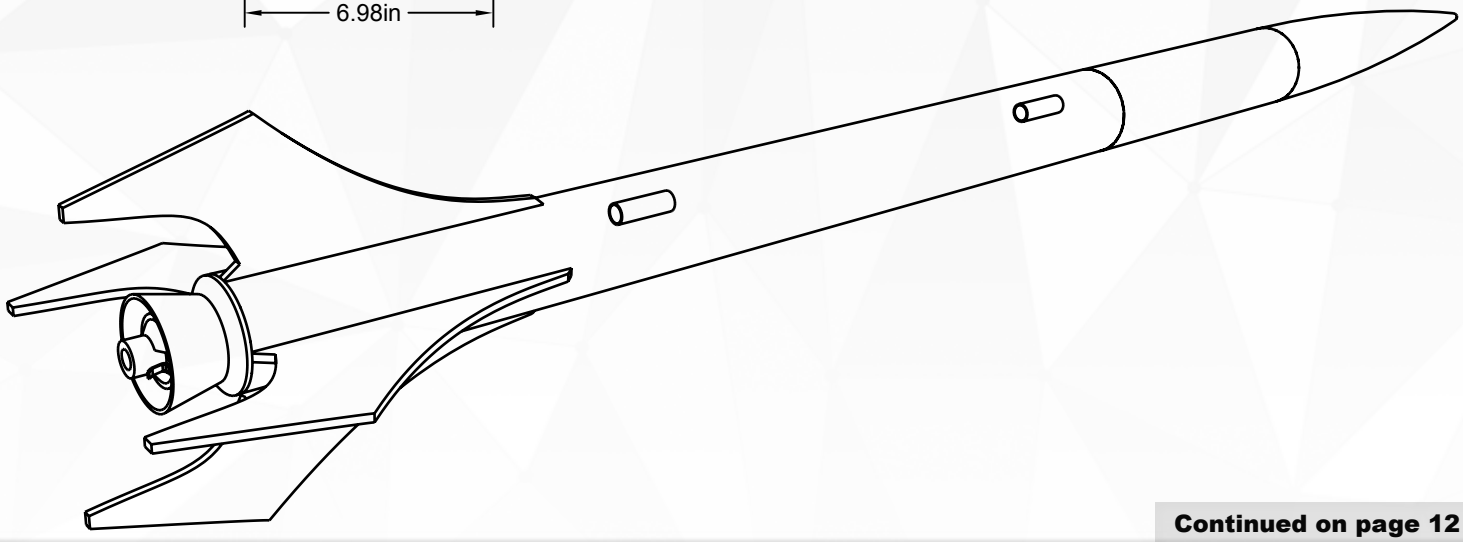

Continued on page 12

Solar Grapple Rocket Plan

Continued from page 11

A Design by Kevin Cornwell

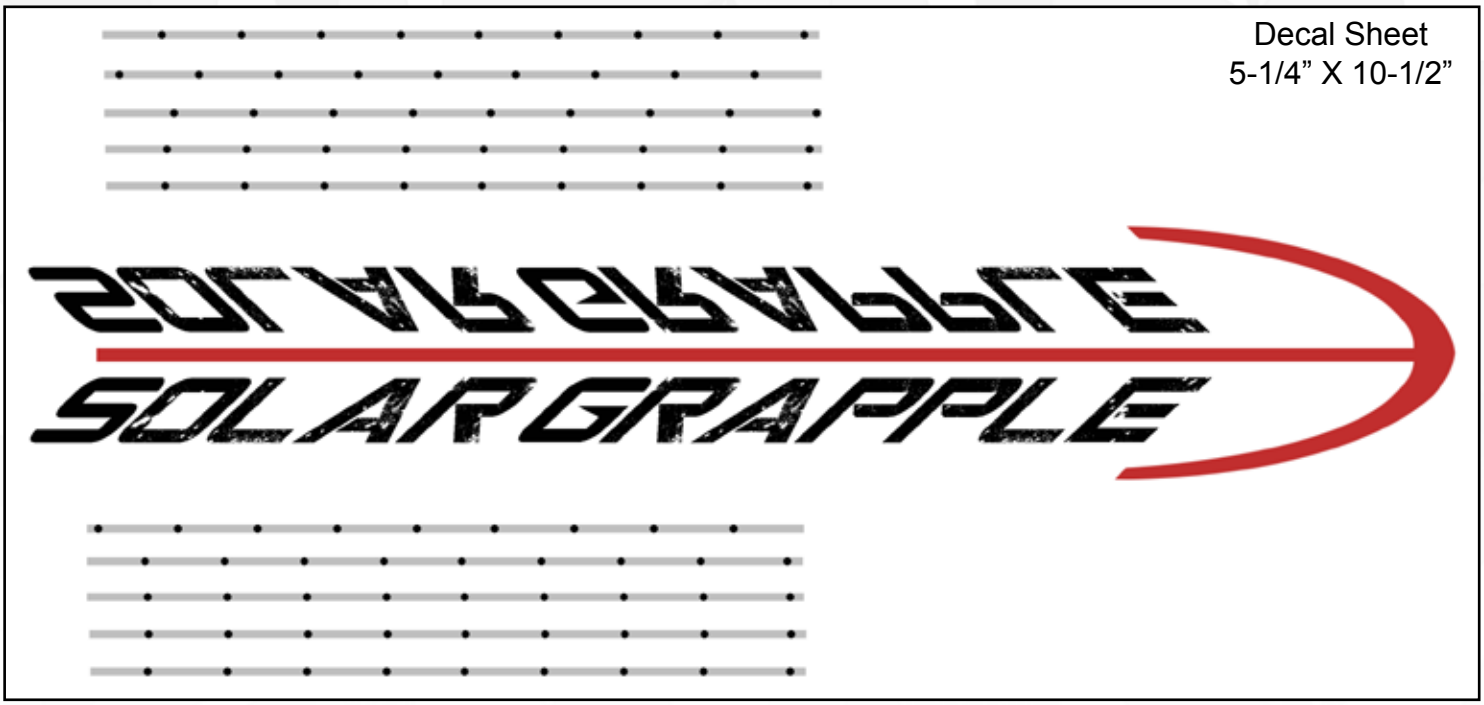

Continued on page 13

Solar Grapple Rocket Plan
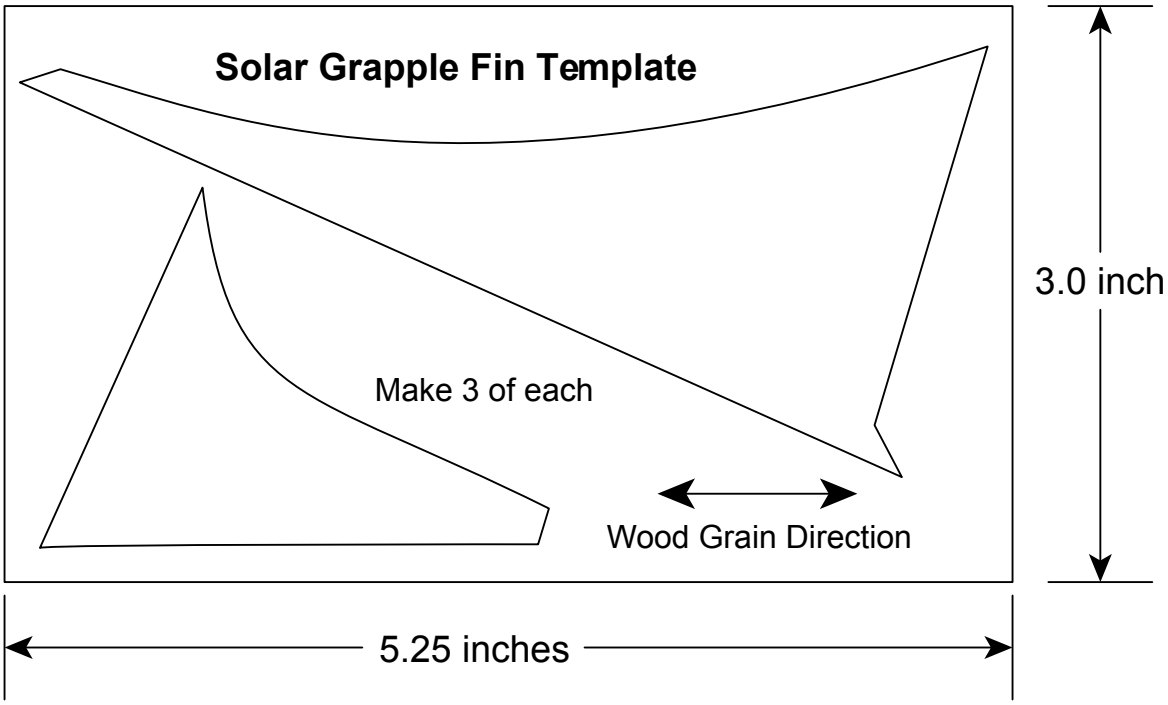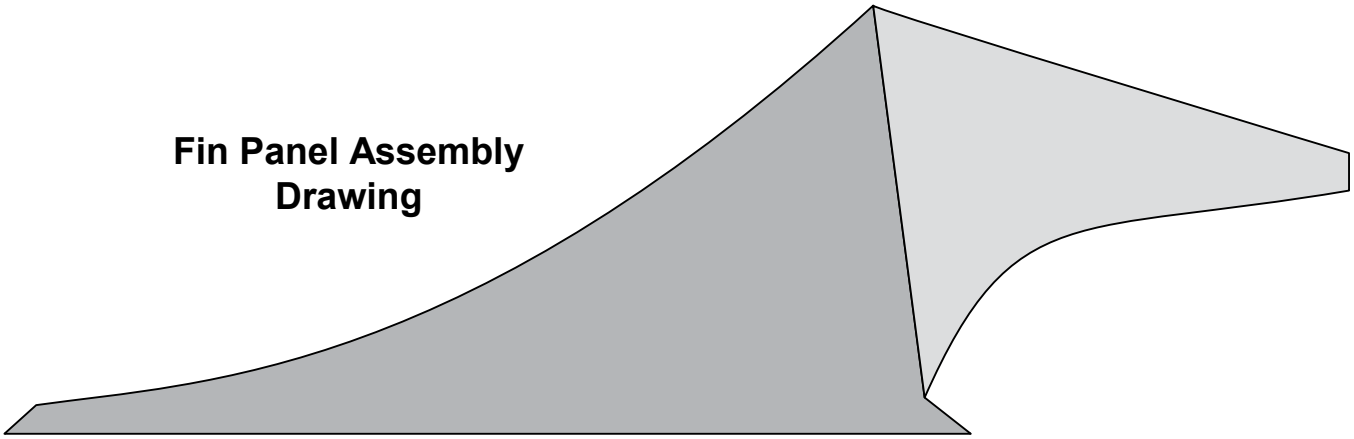
Continued from page 12