PEAK OF FLIGHT NEWSLETTER

ISSUE 523 / JUNE 9TH 2020

IN THIS ISSUE

THE CREW DRAGON – A MILESTONE IN AMERICAN SPACEFLIGHT

BUILD YOUR OWN FALCON 9 WITH THE CREW DRAGON CAPSULE

https://www.apogeerockets.com/Falcon-9-Crew-Dragon-Plan

www.ApogeeRockets.com
4960 Northpark Dr, Colorado Springs CO 80918
Ph# 719-535-9335
APOGEE COMPONENTS

PEAK OF FLIGHT

The Crew Dragon - A Milestone in American Spaceflight

By Bobby Potter

Historical Significance

Since retiring the Space Shuttle in 2011, NASA has had no way of taking astronauts to the International Space Station from its own soil. Instead, we have been paying for seats aboard the Russian Soyuz rocket system.

With the development of the Crew Dragon Capsule, the cost for an American astronaut has dropped from the $80 million per seat on the Soyuz rocket down to about $25 million per seat through SpaceX. This also marks the first private company to ever perform a manned orbital flight.

We thought this would be a good time to commemorate the achievement, take a look at how they got here, and give you scratch-building scale modelers what you need to start making your own rocket.

The Latest in Manned Spacecraft

Since the launch of the first human into space, Yuri Gagarin on the Vostok 1, there has been a drive to create the most capable and efficient manned spacecraft. Several countries and a dozen rockets have competed for the title.

It's hard to argue with the stats behind the Russian Soyuz rocket. This rocket has performed 143 manned flights to date, more than even the Space Shuttle, and has lost only 4 cosmonauts. Originally developed in 1967, this rocket is still in operation today.

The Soyuz rocket also has a unique title, being the only manned rocket system ever to save the crew in the event of catastrophic engine failure. In 1983 a Soyuz rocket exploded on the launch pad. The emergency escape system activated just 6 seconds before the rocket exploded and successfully saved the entire crew.

FIGURE 1: SPACEX TESTING ITS OWN EMERGENCY ESCAPE SYSTEM (IN-FLIGHT ABORT TEST)

The Shenzou, a Chinese orbital rocket system, is the only other currently operational manned spacecraft capable of orbital flights. It completed its first manned flight in 2003. It follows a similar design structure to the Soyuz, but is quite a bit larger. This allows for the potential of more cargo and / or astronauts to climb aboard.

The Space Shuttle is no longer in operation but was a highly successful manned spacecraft for its time. The Space Shuttle holds the title of the first reusable orbital spacecraft (though its reusability is relative to the times). This was an incredible feat of engineering, but the US retired the Space Shuttle Program in 2011 and chose to use the Russian Soyuz rocket flights to send American astronauts to the ISS.

There are several orbital rockets currently under development, and we are likely to see some of these launch soon. Boeing, in partnership with NASA, is currently developing the Starliner, which is a capsule designed to take crew and cargo to the International Space Station. The Starliner is designed to launch atop the Atlas 5 rocket, and has already seen its first orbital test flight. Unfortunately, it was unable to dock with the ISS during the first test due to a bug in the navigation system that caused extended burns and used up too much fuel to make the rendezvous. Boeing is currently making adjustments to fix for this problem, and are looking to launch the Starliner again soon.

Continued on page 3

About this Newsletter

You can subscribe to receive this e-zine FREE at the Apogee Components website www.ApogeeComponents.com, or by clicking the link here Newsletter Sign-Up

Newsletter Staff

Writer: BobbyPotter, Tim Van Milligan
Layout / Cover Artist: Matthew Martinez
Proofreader: Michelle Mason

The Crew Dragon - A Milestone in American Spaceflight

Continued from page 2

FIGURE 2: BOEING STARLINER ATOP THE ATLAS V ROCKET

India has a capable space program as well, and was the first country to make orbit on it's first attempt back in 2013 when they launched a Mars orbiter. 2017 saw the introduction of the GSLV (Geosynchronous Satellite Launch Vehicle) MK-3 and in 2018 this rocket was used to deploy 31 satellites from across the world. In 2019 India attempted to deploy a rover on the lunar surface. The rocket functioned well, and the lunar orbiter also met its goals, but the rover died on impact with the moon's surface as the lander lost control during descent. That mission is slotted for a second attempt in 2021, and India will be continuing to develop the GSLV spacecraft.

A Game of Capture the Flag

On the final launch of the Space Shuttle, an American flag was flown. This is the same flag that was flown on the very first Space Shuttle. This time it was left on the ISS, and would remain in place to be claimed by the next generation of American astronauts flying from the Kennedy Space Center.

In 2011, when this occurred and SpaceX was still just getting off the ground, founder Elon Musk said on the SpaceX Twitter feed, "SpaceX commencing flag capturing sequence". They were on a mission to get Americans back into space again.

Enter SpaceX and the Falcon 1

SpaceX was founded in 2002 by then millionaire Elon Musk. He had just sold his software company, Zip2 (which later became Paypal) for a grand total of $42 million. With half of that he founded Tesla, the electric car company. With the other half, SpaceX was born.

The company's first rocket, the Falcon 1, failed to reach orbit on its first 3 launches. Each attempt suffered varying degrees of catastrophic failure, destroying each rocket and any attempt to salvage components.

The fourth launch, and what Elon claims would have been the last should it have failed, did make orbit in September of 2008. Soon after, NASA awarded SpaceX a billion dollar contract for the further development of Spaceflight technologies, breathing new life into the company.

The Falcon 9 V1.0

Even before the Falcon 1 made orbit, SpaceX announced the development of the Falcon 9 rocket. This was announced in 2005, and the Falcon 9 saw its first flight in 2010. The Falcon 9, named for its nine engines (called the Merlin engines), flew a total of 5 orbital flights before SpaceX retired the rocket in favor of the Falcon 9 V1.1.

V1.1 didn't just have slight changes, it was massively overhauled. The Merlin Engines were upgraded and saw major efficiency gains. The rocket itself was 60% heavier, carried 60% more fuel and was

Continued on page 4

The Crew Dragon - A Milestone in American Spaceflight

Continued from page 3

capable of delivering a 30% heavier payload to orbit. It also saw general design and technology improvements, all of which made the Falcon Heavy possible.

The Falcon Heavy

The Falcon Heavy has three Falcon 9 boosters and doubled the payload-to-orbit capability of the previous record holding rocket, the Delta Heavy. On top of that, with the technology advancements gained during the development of the Falcon 9, all three booster stages are designed to be recovered and reused.

FIGURE 3: THIS IS NOT TAKEOFF, THIS IS A PROPULSIVE LANDING SEQUENCE.

This led to the breathtaking footage of the 2 boosters returning to the ground and landing upright in February 2018.

NEED A PARACHUTE? APOGEE HAS THE ONE YOU'RE LOOKING FOR!

WWW.APOGEEROCKETS.COM/BUILDING-SUPPLIES/PARACHUTES

The Falcon 9 Block 5

The Falcon 9 Block 5 is the current iteration of the Falcon 9, and is the rocket used to propel the Crew Dragon capsule to orbit. Its maiden voyage occurred in May of 2018, and is the most reusable rocket flown to date.

The Block 5 iteration featured upgrades in thrust capabilities and heat shielding. Specifically, the heat shielding on the plumbing, engines and the side of the booster were upgraded to materials with more reusability. There were also some nominal improvements on the landing legs and some other functionalities.

To date, the Falcon line of rockets has made orbit over 80 times, nearly half of those launches have been on reused rockets. The Block 5 Falcon 9 (B1046) that was intentionally destroyed during the in-flight abort test was on its fourth flight. It was the very first Block 5 rocket to launch, and the first SpaceX rocket to be reused multiple times. That particular booster was used 4 times in less than 2 years.

Continued on page 5

The Crew Dragon - A Milestone in American Spaceflight

Continued from page 4

The Crew Dragon

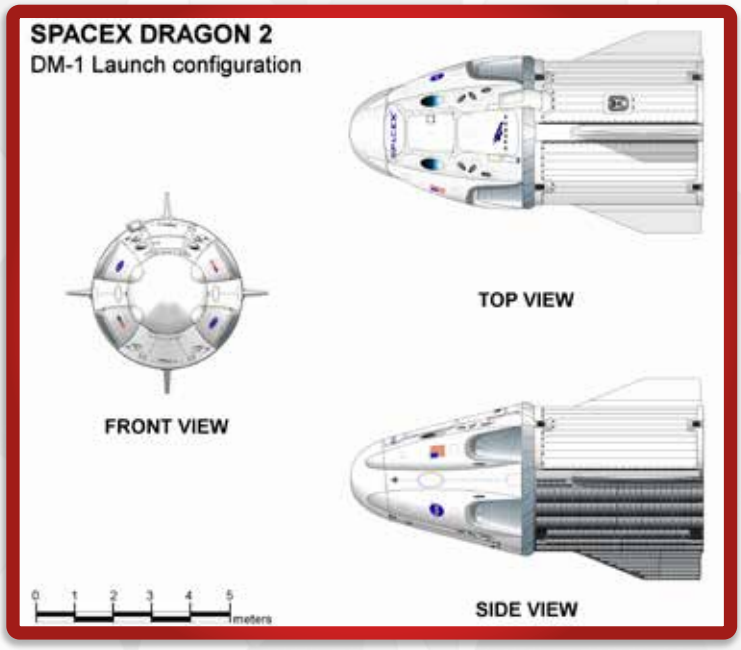

FIGURE 4: IMAGE BY ARCHIPEPE68 UNDER THE CREATIVE COMMONS SHARE-ALIKE INTERNATIONAL 4.0 LICENSE.
https://creativecommons.org/licenses/by-sa/4.0/deed.en

The Dragon Capsule was developed in two different versions; The Cargo Dragon, designed to ferry supplies to the International Space Station (ISS), and the Crew Dragon, designed with the intention of carrying astronauts to the ISS.

As you might expect, the Cargo Dragon had a much easier time getting green-lit and airborne. To date the Cargo Dragon has visited the ISS a total of 21 times to deliver cargo and 9 of those flights were completed with reused capsules.

FIGURE 5: SPACEX DRAGON 2 SPACE CAPSULE ATOP A FALCON 9 LAUNCH VEHICLE

The Crew Dragon had to undergo extremely rigorous testing. A series of 4 tests had to be completed: The pad abort test, hover test, orbital flight test and finally the in-flight abort test. However, the Crew Dragon suffered a failure in July of 2019 during the pad abort test, causing the destruction of that capsule and further delaying the project.

Falcon 9 Block 5 and Crew Dragon's Capabilities

The Crew Dragon is capable of carrying 7 passengers to orbit, and according to SpaceX, is the only spacecraft capable of returning "significant" cargo to Earth. The Dragon consists of two sections, the trunk and the pressurized capsule.

Check out our Facebook page
www.facebook.com/ApogeeRockets

Continued on page 6

The Crew Dragon - A Milestone in American Spaceflight

Continued from page 5

FIGURE 6: THE DRAGON ISS DOCKING MECHANISM DEPLOYMENT (PICTURE FROM THE DEMO-1 MISSION).

The rear section, called the trunk, is unpressurized but can be filled with cargo that doesn't require a pressurized environment. The trunk is sided with solar panels that supply electricity to the spacecraft during its journey and while it is docked on the ISS.

The Crew Dragon has a pressurized section for the astronauts aboard. Even though the capsule itself is designed to be flown autonomously, without human input, it is fitted with everything the astronauts would need to take full control of the craft in the event they need to. This includes a full suite of navigational data, systems controls and an interface to adjust in-flight trajectory, all on digital displays similar to what you might see in a Tesla automobile.

Additionally the pressurized capsule can fit 7 individuals and is even fitted with a toilet. The life support and pressurization systems give this capsule a bit less space internally then its payload counterpart, but astronauts can be subbed out of the flight and their seats replaced by cargo for the ISS.

2020

In January of 2020, SpaceX hit the last milestone required to ferry NASA astronauts Douglas Hurley and Robert Behnken to the ISS. This test required an in-flight abort, an act of detonating a Falcon 9 rocket and carrying the dummy astronauts to safety. This test went off seamlessly, and the Demo-2 launch was scheduled for May 27th.

FIGURE 7: NASA ASTRONAUTS ROBERT BEHNKEN (LEFT) AND DOUGLAS HURLEY (RIGHT)

May 27th came, and astronauts Robert Behnken and Douglas Hurley strapped into the capsule and prepared for launch. As the fuel was being loaded, just 17 minutes before scheduled launch, the attempt was scrubbed due to weather conditions and rescheduled for Saturday, May 30th.

Continued on page 7

The Crew Dragon - A Milestone in American Spaceflight

Continued from page 6

On May 30th, the two astronauts took flight.

FIGURE 8: LAUNCH OF THE DEMO-2 MISSION

The launch went off without a hitch, and to the sounds of a cheering crowd. The Falcon 9 performed "nominally" (meaning as intended) and a short 15 minutes later the crew was in orbit, starting the burns necessary to rendezvous with the ISS. At this time, Robert and Douglas took a few moments to address the world. They took the time to give you a tour of the capsule, talk about their flight, and brand the capsule with the name "Endeavour" after the incredible feat achieved by NASA and SpaceX, as well as in namesake to their first flights on the Space Shuttle Endeavour. You can check out that tour here: https://www.youtube.com/watch?v=IlbIzbOStt4.

After launch, they completed a few controlled burns and went to sleep. After reaching orbit, it takes about 19 hours to make the rendezvous with the ISS.

Upon reaching the ISS, the crew performed the capturing protocols with the Space Station and eventually climbed aboard. They were greeted by the astronauts currently aboard the International Space Station and gave another speech to the nation as they captured the flag.

As I write this, currently the Demo-2 mission has no slated return date. All we know is that the astronauts intend to spend one to four months aboard the ISS. Their return is contingent on the condition of the capsule in orbit, and they will return whenever it appears the capsule is starting to degrade, or vacating the ISS in preparation for the next crewed flight.

The next flight of the Crew Dragon capsule will be a mission called Crew-1, as it will no longer be considered a test or demonstration, but rather a functional flight as needed by NASA. This flight could occur as early as the end of August (which means Bob and Doug would need to be off the Space Station by then, as the ISS isn't known for ample vacancies).

Continued on page 8

The Crew Dragon - A Milestone in American Spaceflight

Continued from page 7

Return and Reentry

Once the crew is ready to return, that process will occur in 4 steps. First, they will disconnect and separate from the International Space Station. Then, they will eject the trunk and slow the capsule down for reentry.

FIGURE 9:THE RE-ENTRY OF MISSION CRS-20 (CREW RESUPPLY #20) AND THE CARGO DRAGON CAPSULE

On reentry, the capsule will take the highest stress and heat levels of the entire mission. The atmosphere is going to be the primary method for slowing down the velocity of the crew dragon capsule, but the heat generated from that will be tremendous. During this stage, they will also use some controlled burns for navigation and orientation.

After reentry, the crew will deploy the parachute recovery system and splash down just off the coast of Florida.

What is Next for SpaceX?

SpaceX was founded with the mission of making human life multiplanetary. To do this, a ton of groundbreaking milestones need to be hit. Being able to put humans on the Space Station is a great start towards those ends, but is not SpaceX's end goal.

Mars is the goal, and not just to get some people on Mars, but enough people to successfully seed life there. That'll take millions of people, but also the technology capable of transporting them. This is where the Starship comes into play.

FIGURE 10: ARTIST RENDERING OF THE STARSHIP ON MARS

SpaceX officially unveiled the Starship prototype back in September of 2019. It has since suffered a few delays, as one of the rockets was torn apart by Texas winds, another just recently exploded during testing. It is unclear when the Starship will complete its first flight, but this rocket will be capable of delivering 150 tons to low Earth orbit.`

Even with these delays, we are likely to see the Starship launch this year.

Join Tripoli.org
Mention Apogee Compo-

Continued on page 9

The Crew Dragon - A Milestone in American Spaceflight

Continued from page 8

FIGURE 11: THE FIRST STARSHIP TO BE BUILT (THIS PROTOTYPE HAS SINCE BEEN DESTROYED IN TESTING)

FIGURE 12: ROBERT BEHNKEN LAUNCHING A MODEL ROCKET JUST DAYS BEFORE HIS FLIGHT TO THE ISS. AS WE SAY AT APOGEE COMPONENTS: "THE FIRST STEP INTO SPACE IS A MODEL ROCKET."

Build your own Falcon 9 with the Crew Dragon Capsule

Continued from page 9

Build your own Falcon 9 with the Crew Dragon Capsule - By Tim Van Milligan

In March of 2020, at NARCON in Arizona, Estes displayed a scale version of the Falcon 9 with the Crew Dragon capsule. We're eagerly awaiting this model's release, and we'll probably be carrying it here at Apogee Components. Unfortunately, we don't know when it will be released.

But with the excitement surrounding the SpaceX launch, we decided we should commemorate the launch with a plan of the rocket. It was just too big of an event to pass up without doing something special for it. I made the decision to do this at the last moment, about a week before the SpaceX launch on May 30th.

When I was thinking about it, I thought that it would be cool to do it in 1/70th scale, so that its size could be easily compared to our kits: the Saturn 1B and the Saturn V. But after doing a little bit of math, the body tube size for that scale was an oddball - bigger than the BT-60, and smaller than the BT-70.

The other consideration when choosing a size was the limitations of our own in-house 3D printer. It can only handle parts that are relatively small. Because of this, I opted to make the rocket based on a BT-60 (41.6mm diameter) body tube.

Like building any scale rocket, the process starts by collecting scale data. Unfortunately, the only good dimensions I had to work with were for the diameter and length of the rocket. SpaceX says the core of the rocket is 12 feet in diameter (144 inches), so that is what I used for my model. Based on this, the scale of the rocket model here is 1.637"/144" = 1/87.96 (approximately 1/88th scale).

I knew the hardest thing about this rocket is the shape of the Crew Dragon nose cone. But fortunately, there are a lot of 3D print (.STL format) files available on the internet for this particular rocket already. An .STL file, if you're not familiar with the format, is a file that is the correct format for a 3D printer.

A quick search of the website "thingiverse" brought up a lot of models for the Crew Dragon and Falcon 9 rocket. We looked at most of them, and settled on a Crew Dragon file by designer, Zachary Moorhead-Rosenberg (available at: https://www.thingiverse.com/thing:1802512)

Zachary's model of the Crew Dragon is pretty decent, if I do say so myself. I only noticed some minor details compared to the real Crew Dragon flown on May 31. Only us nit-picky scale modelers would notice it if we were really looking hard at it. I wish I had Zachary's skills in designing with CAD, as this is much better than I could have done myself.

However, there is one thing bad about the format of the

Continued on page 11

Build your own Falcon 9 with the Crew Dragon Capsule

Continued from page 10

.STL files. They are hard to manipulate because they are a surface mesh, and not solid. So you can't easily add or change things to the part. In this case we do need some modification. For a model rocket nose cone, we need a shoulder on the base so that it will easily attach to a paper tube. The original file by Zachary didn't have that should on it.

In order to make the model rocket version, we contacted Zachary and told him about our intent to put out plans for you and other modelers to make your own models. He stipulated that as long as we didn't intend to make money off of it by selling the design, or giving it to others to sell, he would provide us with a different 3D format that could be easily modified to add a shoulder on the base. It is for this reason, that if you ask us for the CAD files for the rocket, we will turn you down.The raw engineering files are not ours to give away. Nor will I modify the files to print them out at a different size.

Incidentally, Zachary has a little bit of history that you might find interesting. Zachary worked as a propulsion engineer for SpaceX from 2015-2019 before moving to the Southwest Research Institute. You can find more of his 3D design files on thingiverse.com under the name "Zastro" or check out his professional portfolio on LinkedIn.

Modifying Zachary's Crew Dragon file was done in the Fusion360 CAD software that I personally use here at Apogee. You can read how useful it is to make organic shapes in Peak-of-Flight Newsletter #408.

The landing legs, engine nozzles and the grid fins were a few of other items that I had to search for on the internet. Those I got from a different set of CAD files from the website: https://grabcad.com/library/spacex-falcon9-1. These were made by Lance Skelly, and are in a format that is easily modified using any 3D cad software.

Unfortunately, these landing legs are not of the "Block 5

version" of the Falcon 9 rocket. They are modeled after the components on an older version of the rocket. So know that this model isn't perfect and truly scale-like. And the landing legs don't pivot and actually swing down on my model. They are simply glued to the side. If you're looking for true scale, this is another thing that will annoy you about our plans here.

Modifying the legs and the grid fins took a few days. It was actually the longest part of the design process of putting this plan pack together. Had I more time to work on them, I probably could have gotten something more scale-like. I'm sorry for that. You can cuss me out, or make your own if you want something more realistic scale. If you do make your own, and would like to share the files with other modelers, let us know and we'll be happy to post them here on this webpage.

The decal artwork for this rocket was assembled from vector graphics that were again easily accessible from the internet. Lots of people put up artwork that you can download for free. I prefer working with vector graphics because they scale up and down easily, and always retain their crisp edges. For this rocket plan, you'll make your own decals by printing the artwork on water-slide decal paper. You can find this online at stores like Amazon or other retailers. It is available in both laser-printer or ink-jet varieties depending

Continued on page 12

Build your own Falcon 9 with the Crew Dragon Capsule

Continued from page 11

on what type of color printer you have.

With all the major components in electronic format on my computer, the next task was to modify them and see if I could make a real flying rocket out of them. For that, I had to turn to our RockSim software (https://www.apogeerockets.com/RockSim/RockSim_Information). I used it to help me size the stabilizing fins. Unfortunately, we don't have nine Merlin motors that can steer our model rocket like the real Falcon 9 from SpaceX. We need fins to guide the model rocket version. For this particular scale-rocket, I opted to use clear acrylic fins, so that at least they are less noticeable. The nice thing is that the Falcon 9 is a real long rocket, so the fins didn't need to be made huge in order to stabilize the rocket. But since I made them a little bit on the smaller size so they are less noticable, you will need a little bit of modeling clay to add to the nose to move the Center-of-Gravity (CG) to be in front of the Center-of-Pressure (CP). You can read more about stability in Peak-of-Flight Newsletter #462.

Acrylic sheeting for the fins is readily available at hardware stores in the window section. I found 0.080 inch thick sheets work real well.

The landing legs on the side of the Falcon 9 presented a challenge in the fin placement. There isn't much room near the bottom of the tube for the fins because the landing legs get in the way. So I opted to move them forward 3/4ths of an inch from the base of the rocket, where I could fit them between the landing legs.

Because acrylic is fairly thin and gluing it to a tube is harder, I opted to make the fins attach using the "through-the-wall" method. This is a lot stronger than a butt joint that is commonly used on smaller rockets.

I got to warn you thought about using acrylic for fins. It is tough to cut. If I didn't have a laser to cut it, I would probably opt for balsa wood or something else that is easier to cut. You might have a local "Maker Space" near you where you can get acrylic sheet laser-cut. Check your local library, as many of them now offer this type of service to the community. Please don't contact us here at Apogee Components about this. We do not offer custom cutting services. Sorry.

Cutting the slots for the fins is considered a skill-level 4 type of task on the difficulty scale. For scratch-builders, like this model, it shouldn't be too hard to accomplish. If you've never cut slots in a tube before, I made a video that should help you out. You'll find it at: https://www.apogeerockets.com/Advanced_Construction_Videos/Rocketry_Video_3. Cutting the slots would probably be one of the first things you'd do after cutting out the fins when building a rocket like this.

Incidentally, my sequence for building the rocket was to cut the slots of the tube, put in the engine mount to stiffen up the rear end by the slots and then fill the spirals in the tube. After that, it went to paint before attaching any of the outside parts. Fortunately, this is an easy paint scheme, since the tube is just black and white. White goes on first, and then the black. The details like the grid fins and the landing legs were painted off the rocket, and then attached using thick super-glue after all the decals were put on.

To power this rocket, I decided to use a 24mm diameter

Continued on page 13

Build your own Falcon 9 with the Crew Dragon Capsule

Continued from page 12

motor mount. Why? Because with the funky odd-shaped nose cone, the grid fins, and the landing legs, this model is going to be a bit draggy. I didn't want to under power it with an 18mm motor. I wanted more power just in case; and the 24mm motors allow for a larger variety of motors that can be used. And if I wanted a lower flight, I could always use a 18/24 motor adapter to fly with the smaller motors. That newly released Estes C5-3 motor is looking like a great choice for a low-to-the-ground flight. But only fly it after you've put it up on a 24mm Estes D12-5 motor so you can get a feel for how much drag it really has.

The hardest part of designing this model was how to restrain the rocket motor. I wanted to fly it with the simulated nozzles on the base to make it look realistic when launched. So I needed a retention method that would allow me to pop off the nozzles to get the engine in and out of the rocket. A metal engine hook would have looked ugly, and I didn't want to have an engine tube sticking out the rear end.

I decided to use the Estes 24mm plastic screw-on engine retainer. It will fit into a BT-60 size tube with room around the perimeter for the shoulder of the display nozzle to slide in as well. The only caveat is that getting the cap on and off inside the tube is a little tricky and has to be done with care. Don't over-tighten the cap when you put it on, or it gets very difficult to remove. Just snug on the tightness is all you need to keep the engine from sliding out.

On a whim, I printed a new nozzle section for the base

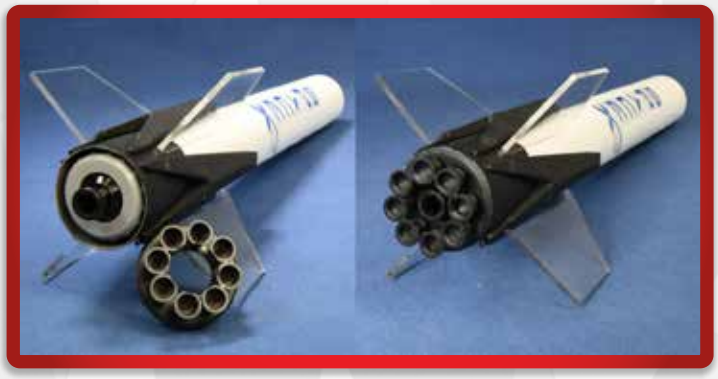

of the rocket with a larger hole in the middle of it so that the nozzle of an Aerotech single-use motor would stick out. It almost looks like the end of the nozzle of the real Merlin engine in the middle of the eight outer engine bells. So in the download of the STL files, you'll find two engine sections - one with a hole so you can fly it, and one with nine nozzles if you choose it for display. You can swap then out easily if you want.

When building the engine mount, the dimensions are very important. Because of that, you'll find some basic step-by-step instructions for putting the motor mount together.

The aft centering ring should be positioned 0.4 inches

Join The NAR.org
Mention Apogee Components

Continued on page 14

Build your own Falcon 9 with the Crew Dragon Capsule

Continued from page 13

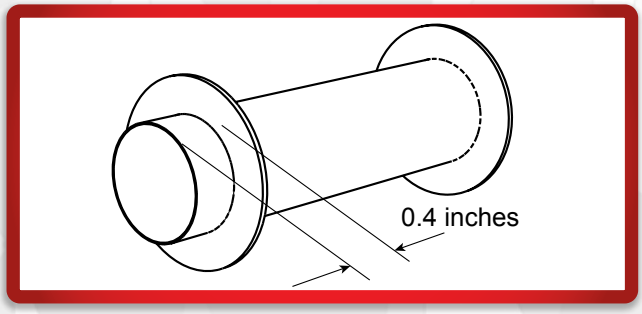

from the end of the tube. The forward centering ring should be glued on near the front edge. Its position is not as critical. NOTE: I normally mount the kevlar shock cord at the forward ring. It is not shown in this illustration, but you will also need to have a thick ring (CR-24/29) in this location to provide a stronger anchor for the shock chord. That ring is provided in the Motor mount kit 24mm/BT-60 (P/N 12009) if you choose to use it when building from these plans.

The body of the Estes retainer can be glued onto the

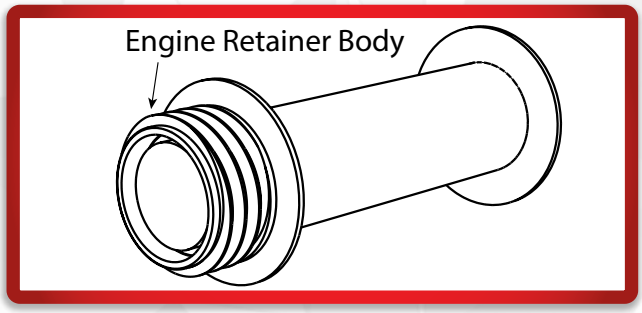

engine mount tube using super glue. Put a good fillet of glue on it, as the fit can be a little loose on the 24mm motor tube.

Here is the critical step: locating the engine mount tube in the body tube. You really should put a rocket engine with a built-in thrust ring into the motor mount, and then twist on the retainer cap piece. Then slide the whole thing into the tube so the retainer is flush with the back of the tube. This is the final glued in position of the engine mount.

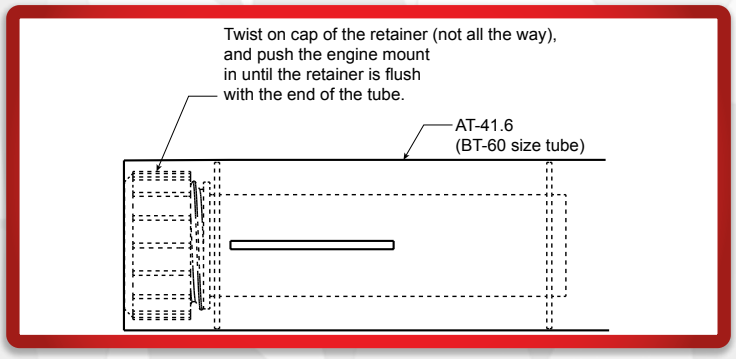

As a check, or when your rocket is ready to launch, you'll slide in the rocket engine up to the thrust ring and then screw on the retainer cap. This is tricky, because there isn't much room for the retainer cap. But it can be done. Once the cap is on, the nozzle piece can be slid on the

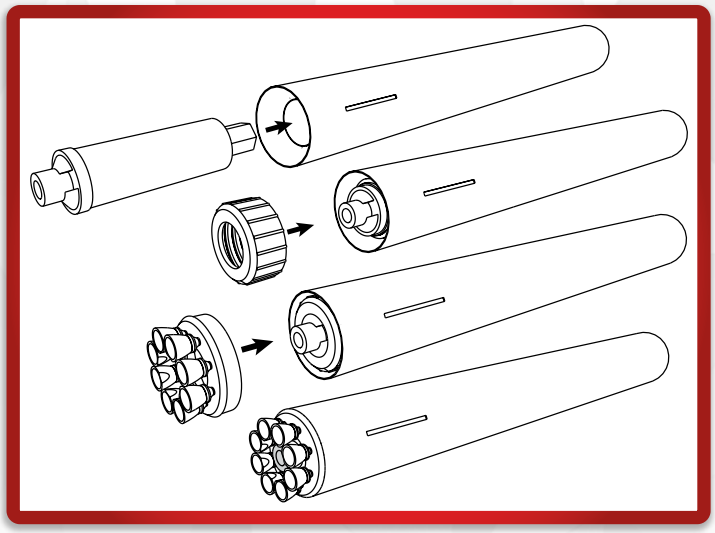

Continued on page 15

Experienced HPR Builders

- Eliminates Shear Forces on Centering Rings
- Mates with AeroPacks Flanged Engine Retainers
- Fits Standard HPR Tubes, Blue Tubes, and Fiberglass Tubes
- Made from Aircraft Grade Aluminum

https://www.apogeerockets.com/Building_Supplies/Thrust_Plates

Build your own Falcon 9 with the Crew Dragon Capsule

Continued from page 14

For the recovery, I recommend two parachutes, which means the rocket will come down in two separate pieces. The reasoning is that something as nice as this rocket should come down a bit slower in order to avoid landing damage. I put a 15" plastic parachute on the front section, and a 18" plastic chute on the fin-can portion of the rocket.

This rocket is a little bit heavier because of the 3-D printed plastic parts and the acrylic fins. It is also more draggy because of the landing legs, grid fins, and the odd shaped nose cone. Because of that, the rocket needs more power to get it up to speed quickly. High-thrust motors are a must, and if you have it, use a longer launch rod.

Conclusion

The purpose of this plan is for educational purposes, since I wanted to go through the process of creating a scale model from a scratch-builder's perspective. The new 3D printing technology is used extensively here, and in fact, if you don't have the 3D parts, you probably won't be able to build these plans. I hope you get to know this technology, as the future of model rocketry is going in this direction of printing your own parts. I just hope it doesn't go so far that the entire models are 3D printed. That is certainly possible, and I've seen a lot of models already made this way. But plastic is always going to be heavier than paper tubes and balsa fins. So if you want performance, then you'll want to use a combination of "some parts" made from 3D printers, and most of the rocket still made from conventional rocketry components.

This rocket because of all the 3D printed parts, in my opinion, is not overly complex to build. At a maximum, I'd say it would be a Skill Level 4 on the difficulty scale. You do have to cut slots in the tube, cut tough acrylic plastic, and get the engine mount in the correct position. But after that, assembly and painting goes quite quickly.

I do recommend the Estes model if you prefer a kit over working from plans. We got to see their model at NARCON, and it is a beauty.

About the Author

Tim Van Milligan (a.k.a. "Mr. Rocket")` is a real rocket scientist who likes helping out other rocketeers. He is an avid rocketry competitor and is Level 3 high power certified. He is often asked what is the biggest rocket he™s ever launched. His answer is that before he started writing articles and books about rocketry, he worked on the Delta II rocket that launched satellites into orbit. He has a B.S. in Aeronautical Engineering from Embry-Riddle Aeronautical University in Daytona Beach, Florida, and has worked toward an M.S. in Space Technology from the Florida Institute of Technology in Melbourne, Florida. Currently, he is the owner of Apogee Components (http://www.apogeerockets.com) and also the author of the books: Model Rocket Design and Construction, 69 Simple Science Fair Projects with Model Rockets: Aeronautics and publisher of the "Peak-of-Flight" newsletter, a FREE ez`ine newsletter about model rockets. You can email him by using the contact form at https://www.apogeerockets.com/Contact.

Continued on page 16

Build your own Falcon 9 with the Crew Dragon Capsule

Continued from page 15

Construction Notes:

NOTE: To build this plan, you will need to have some parts 3D printed. Apogee Components does NOT offer this service, and you are on your own to get them produced.

Download the ***RockSim*** design file for the Falcon 9 at: https://www.apogeerockets.com/Falcon-9-Crew-Dragon-Plan

Disclaimer: This is for eductional purposes only. If you'd like a kit of this rocket, get the one from Estes.

Launch Photos For Scale Documentation Can Be Found At:

https://www.flickr.com/photos/nasahqphoto/sets/72157714384169073/

https://www.flickr.com/photos/spacex/with/16490359747/

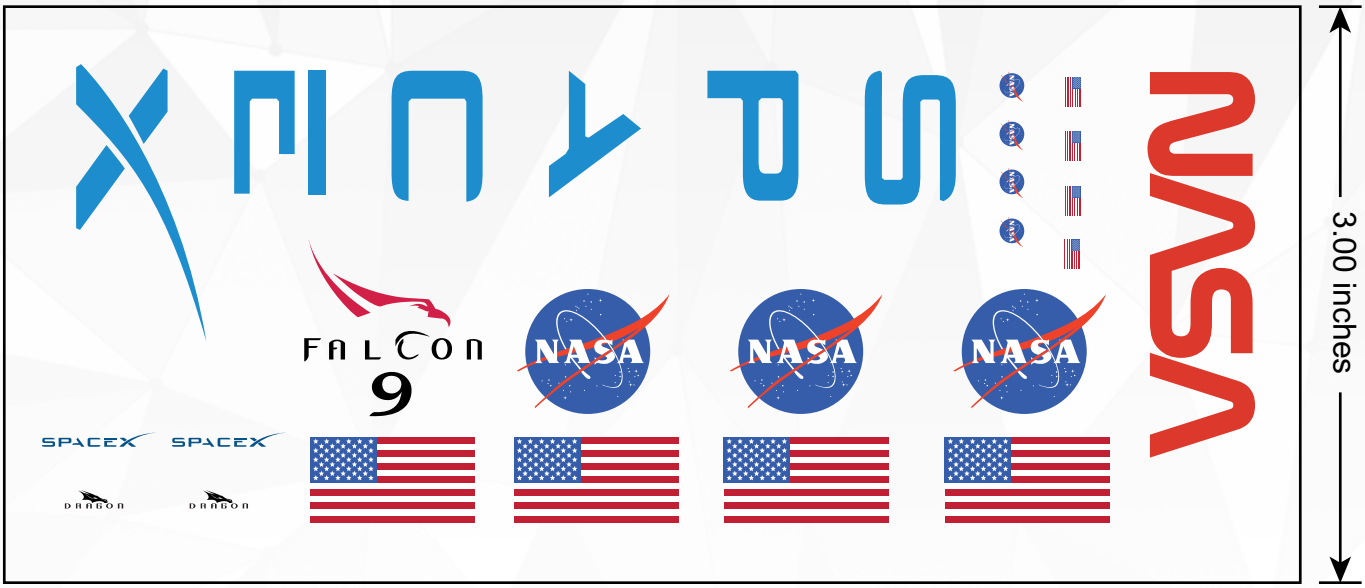
FALCON
9
NASA
NASA
NASA
SPACEX
SPACEX
DRAGON
DRAGON
USA
USA
USA

Build your own Falcon 9 with the Crew Dragon Capsule

Continued from page 16

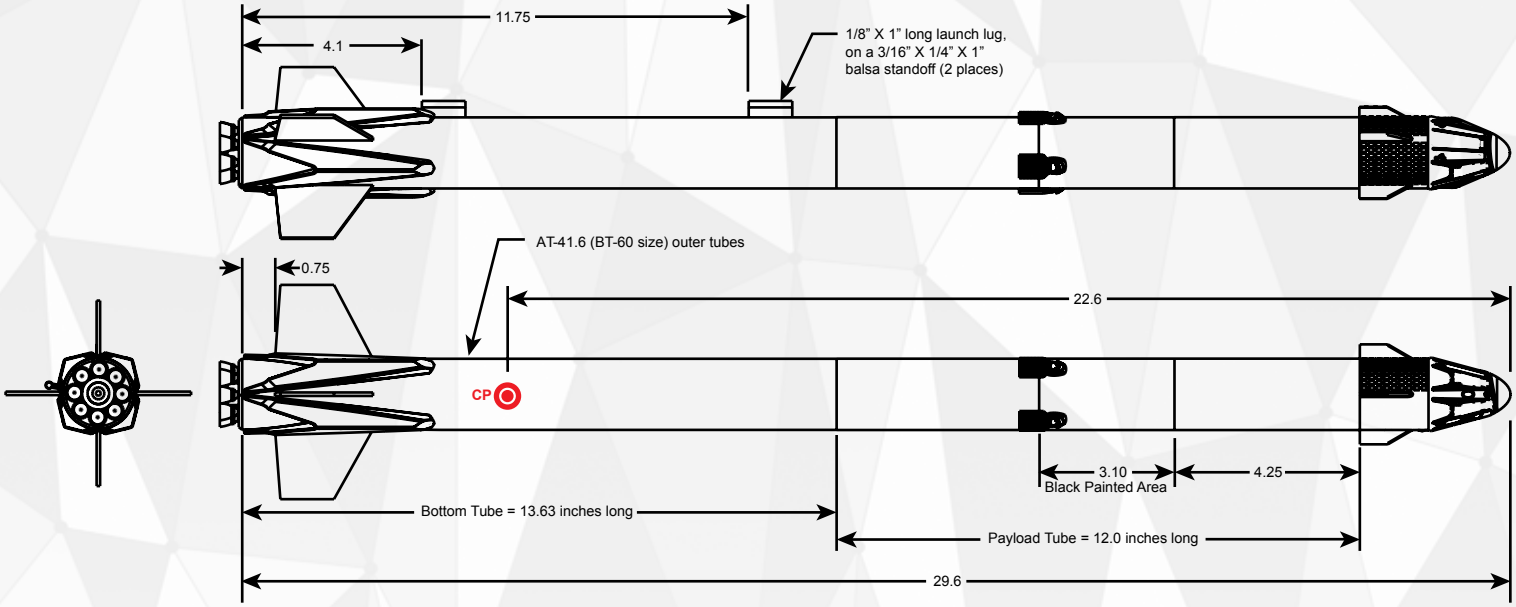

Falcon 9 Crew Dragon Plan

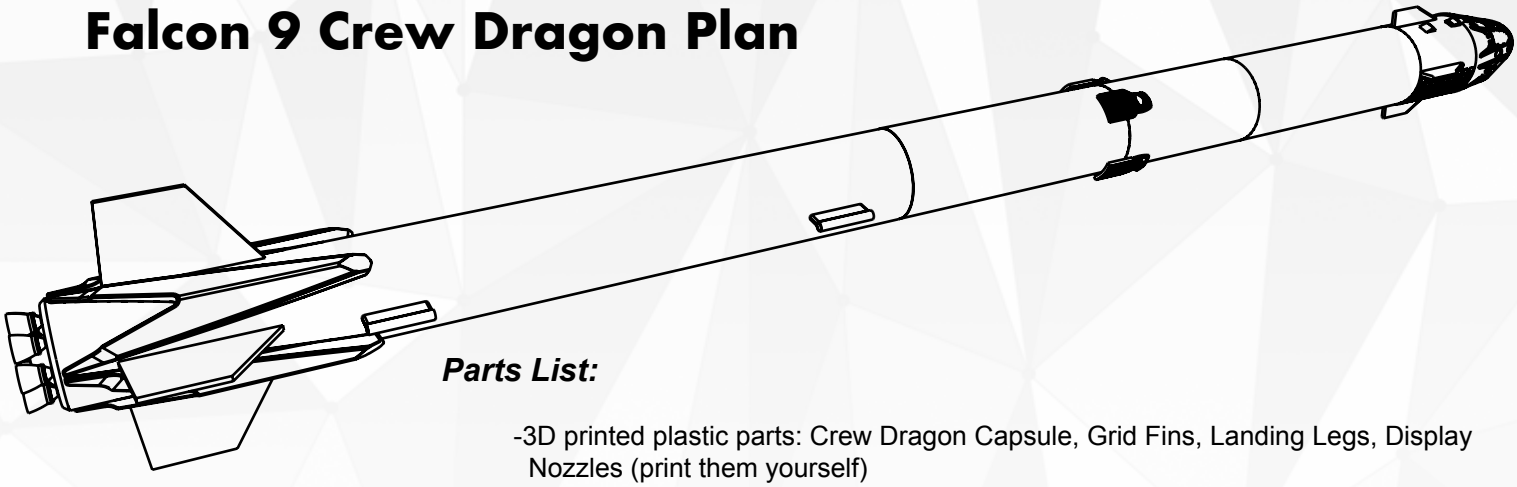

Parts List:

-3D printed plastic parts: Crew Dragon Capsule, Grid Fins, Landing Legs, Display Nozzles (print them yourself)
-AT41.6 (BT-60) Body Tubes (2 required)
-24mm Estes screw-on retainer (P/N 24021)
-AC-41.6 (BT-60) Tube Couper (P/N 13019)
-Coupler Bulkhead Disk 41.6mm (BT-60) and Screw Eye (P/N 12261)
-Motor mount kit 24mm/BT-60 (P/N 12009)
-Kevlar Cord 100# (P/N 30325) - 7 feet long
-18" Cut-to-size plastic parachute (P/N 29126) - 2 required
-1/8" Launch Lug (P/N 13052)
-3/32" thick balsa for launch lug stand-offs (P/N 14097)
-Clay nose weight (minimum of 10 grams)
-0.08-inch Thick clear acrylic sheet for fins
-Water-slide decal paper (available from Amazon or other online retailers)
-Finishing supplies like paint (Flat white, flat black, silver)

Continued on page 18

Build your own Falcon 9 with the Crew Dragon Capsule

Continued from page 17
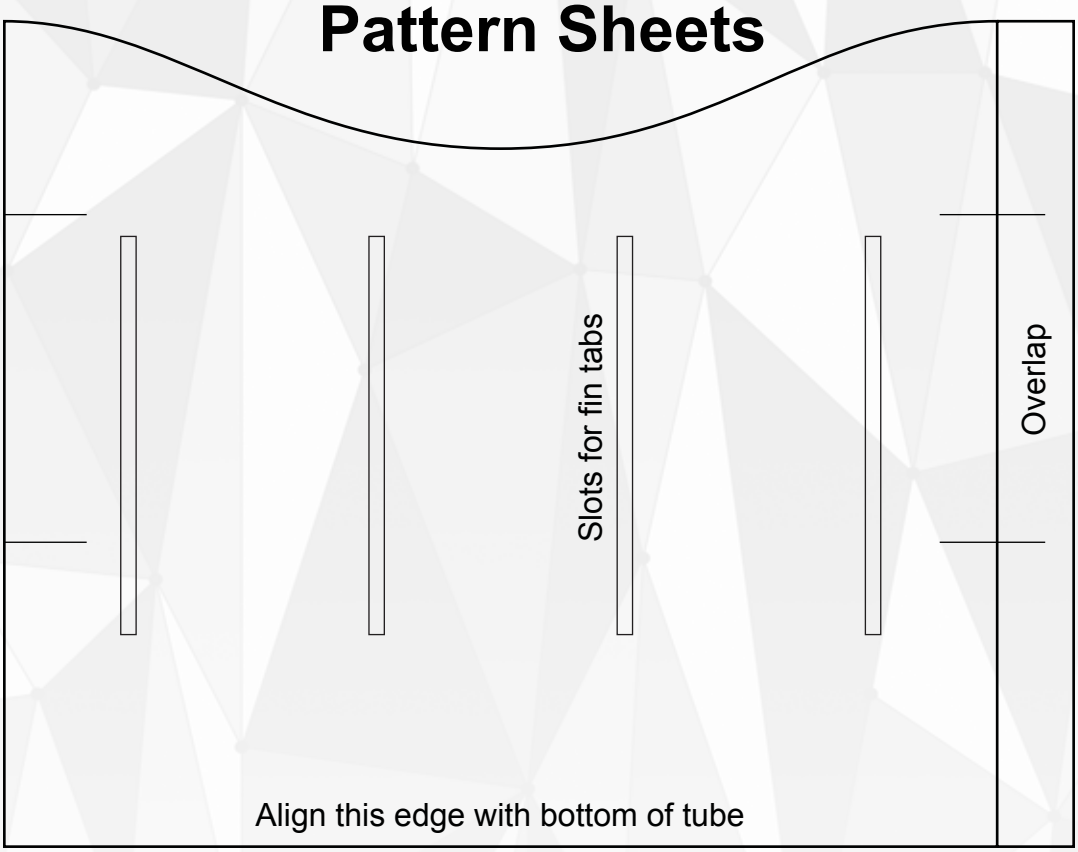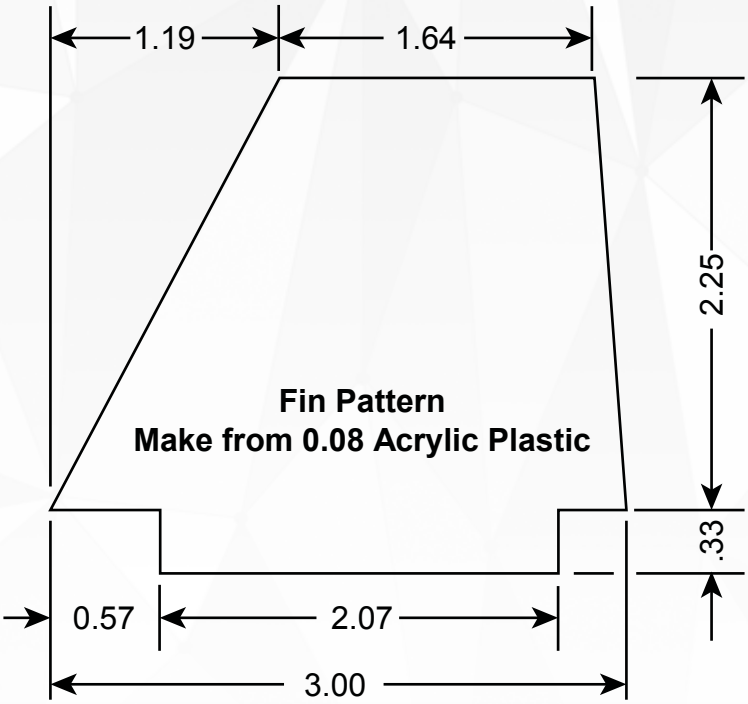
Pattern Sheets