PEAK OF FLIGHT NEWSLETTER

ISSUE 538 / JAN 5TH 2021

IN THIS ISSUE

ONLINE RESOURCES TO PREPARE FOR LAUNCH

https://www.apogeerockets.com/Peak-of-Flight-Rocket-Plans

www.ApogeeRockets.com
4960 Northpark Dr, Colorado Springs CO 80918
Ph# 719-535-9335

APOGEE COMPONENTS

PEAK OF FLIGHT

Online Resources to Prepare for Launch

By Bobby Potter

Online Resources to Prepare for Launch

Apogee has worked hard to be one of the best resources for model rocketeers. It is now a place where you can go, that will actually help you prepare for your next launch.

This article will detail all the resources we use and guide people to prepare for launching, from the very first steps in rocketry to the moment you ignite the motor. There are also links to other sites to help prepare for your lauch.

Selecting a Kit

Selecting a rocket to build and fly is always the first step in model rocketry. Whether you are interested in high-power, scale models, clusters, or unique recovery systems, we definitely have a rocket that is a good place for you to start. Here are some of the great resources we use to help people select a rocket for their first launch.

Choosing Rocket Kits for Young Modelers

Continued from page 3

how to design and create fin jigs and other building fixtures.

Some of the higher skill-level kits only have minimal instructions, even though they may require an extremely complicated construction process. These kits are perfect for the expert rocketeer who wants a long project and has the skills to modify the kit's components to achieve a result that better suits their needs. For example, a scale modeler may want to add additional details to better match the real rocket they are modeling.

Will someone be helping them with the build?

Especially for young rocketeers, a guiding hand can make a world of difference. Most of us have a mentor, someone in the hobby we look up to and go to for advice. Oftentimes this is a parent, a teacher, or individuals providing guidance to those in skills courses like NARTREK.

Consider who the child is working with on these endeavours. A parent or family friend may need to take it slow just like the child, while other mentors are very capable of teaching the more advanced concepts and can progress with the young rocketeer at a more accelerated rate. If the child has their eyes set on a more advanced project, consider asking the mentor for advice on what would be a good next step. A vast majority of us have been exactly where they are, and the rocketry community makes an excellent

FIGURE 3: THE FLYING MACHINE - A SKILL LEVEL 4 ROCKET

https://www.apogeerockets.com/Rocket-Kits/Skill-Level-4-Model-Rocket-Kits/Flying-Machine

FIGURE 1: THIS PEAK-OF-FLIGHT DETAILS EVERYTHING YOU MIGHT NEED TO SELECT A ROCKET KIT FOR YOUNG MODELERS.

Looking for a model for someone else? It can be hard to find the right kit for a young modeler, because you want them to be excited about the rocket, but you also don't want it to be too complicated for a new rocketeer. In this case, check out our Peak-of-Flight #518 (https://www.apogeerockets.com/education/downloads/Newsletter518.pdf). This article details a good process for selecting rockets for new / young rocketeers.

Selecting a Kit By Available Motor

Have a motor that you are looking to get some use out of, but don't know what to build for it? Apogee keeps a comprehensive database of motors that work with each kit, based on RockSim simulations (and an occasional flight ourselves). This database can be viewed a bunch of different ways, but one that usually goes under the radar is the reverse kit lookup (https://www.apogeerockets.com/index.php?main_page=motor_rocket_kits). Here you can select any motor and see all of the kits that are safe to fly with that motor. By following the link to the kit page, you can see what kind of altitude you can expect when flying that kit with that particular motor, as well as a whole bunch of other information regarding that model.

Selecting a Kit By Features

Sometimes you are looking for a model that is capable of clustering motors, other times you want a unique style of recovery system, or perhaps a boost glider. Searching through kits by features can be a hassle, so we have created individual lists of kits based on unique features. All of these are accessible under the Shop - Model Rocket Kits menu.

Below you will find links to the list for rockets featuring unique characteristics.

-Gliders: https://www.apogeerockets.com/Rocket-Kits/Glider-Rockets

-Fiberglass Kits: https://www.apogeerockets.com/Rocket-Kits/Fiberglass-Kits

-Cluster Rockets: https://www.apogeerockets.com/Rocket-Kits/Cluster-Rockets

-Dual Deployment: https://www.apogeerockets.com/Rocket-Kits/Dual-Deployment

-Helicopter Recovery: https://www.apogeerockets.com/Rocket-Kits/Helicopter-Rockets

-Multi-Staged Rockets: https://www.apogeerockets.com/Rocket-Kits/Multi-Staged-Rockets

-Scale Models: https://www.apogeerockets.com/Rocket-Kits/Scale-Rockets

Continued on page 3

About this Newsletter

You can subscribe to receive this e-zine FREE at the Apogee Components website www.ApogeeComponents.com, or by clicking the link here Newsletter Sign-Up

Newsletter Staff

Writer: Bobby Potter
Layout / Cover Artist: Matthew Martinez
Proofreader: Michelle Mason

Continued from page 2

Selecting a Kit By Altitude Goals and Other Metrics

The sortable rocket list is a table that allows you to sort through all of our available kits by the metrics you think are most valuable. Using this list, you can sort through all our rockets based on the highest and lowest altitude it is capable of, as well as metrics like skill level, dimensions, weight price and even the launch pad required.

Rocket Name	Image	Manuf.	PN	Skill Lvl	Length	Weight	Diameter	Motor Size	Launch Pad	Altitude (lowest flight)	Altitude (highest flight)	Price	Stock
Apeneetice		Apogee	05039	1	16.000"	1oz (28.35g)	1.000"	18mm	Low Power	69 ft	2685 ft	$11.30	In Stock
Aviso		Apogee	05035	1	15.000"	1oz (28.35g)	0.980"	18mm	Low Power	118 ft	2266 ft	$11.94	In Stock
NeWSER		Apogee	05038	2	44.800"	5oz (141.75g)	1.180"	24mm	Low Power	309 ft	2731 ft	$28.02	In Stock
Meme		Madcow Rocketry	07249	3	19.000"	0oz (0g)	2.600"	29mm	Mid Power	1216 ft	2631 ft	$50.24	Out of Stock
Mamba		Madcow Rocketry	07245	3	23.750"	16oz (453.6g)	2.600"	29mm	Mid Power	437 ft	1472 ft	$68.43	In Stock
Torrent		Madcow Rocketry	07231	3	64.000"	63oz (1.79kg)	4.000"	38mm	High Power	685 ft	3835 ft	$192.60	In Stock

FIGURE 2: THE SORTABLE ROCKET LIST - CLICK ON COLUMN TO RESORT THE ENTIRE LIST. FOR EXAMPLE, CLICK ON THE LENGTH COLUMN HEADER, AND IT WILL LIST THE ROCKETS FROM SHORTEST TO LONGEST. CLICK ON IT AGAIN, AND IT WILL LIST THEM FROM LONGEST TO SHORTEST.

The Sortable Rocket List: https://www.apogeerockets.com/index.php?main_page=sortable_rockets_list

Be sure to verify that your flying field can accommodate the rocket kit you are selecting, and the altitude range at which it flies. For example, a high-power rocket kit like the Zephyr (https://www.apogeerockets.com/Rocket-Kits/Skill-Level-3-Model-Rocket-Kits/Zephyr) just can't be flown in a school yard or without the appropriate waivers.

Selecting a Motor

Now that you have the rocket you intend to fly, you need to select the motor you intend to fly it on. Sometimes you want to select a motor with particular goals in mind, like a particular altitude limitation for the field you are flying on. Other times you just want to find a motor that is going to get you as high as possible, or moving as fast as possible.

Other times you are just looking to launch your rocket affordably. Fortunately, for any of these cases, the ApogeeRockets.com website can help.

FIGURE 3: APOGEE'S RECOMMENDED MOTOR CHART

The easiest way to find the right motor for your rocket is to search through the recommended motors on the kit page. Unlike other manufacturers, Apogee takes the time

Continued on page 4

Online Resources to Prepare for Launch

Continued from page 3

to run comprehensive simulations on each and every kit we offer. Instead of giving you a list of 3 or 4 possibilities, we give you a list of every possible option that is safe to fly for that rocket kit. Sometimes, this literally involves running hundreds of simulations because there are that many motors available that would fly the kit safely and successfully.

In addition, we also tell you how high you can expect the rocket to go, and if there are any restrictions (like age or high-power certifications) on that motor. Motors that require expensive HAZMAT shipping are also designated by (HAZ) under the price, so you can be aware of extra costs associated with them.

There are so many motors that you might feel intimidated when selecting a rocket engine. Don't be. Just pick one of the smaller motors to start with on your first launch of a new kit. We've made a video for exactly this situation, which you'll find at: https://www.apogeerockets.com/Advanced_Construction_Videos/Rocketry_Video_304.

But what if you are making a custom rocket, or the kit you are building is not one offered by Apogee? This happens at Apogee too.

If you are not familiar with simulation software, you should consider giving it a try. Software like RockSim (https://www.apogeerockets.com/RockSim/RockSim_Information) can help you design the rocket and select the best motors to fly it on. We use RockSim to generate the list of safe motors for each kit, and we run simulations on every rocket before we fly it for the first time. You can download and use the trial version of RockSim at: https://www.apogeerockets.com/RockSim/RockSim_Trial.

Thrustcurve.org is another great resource, created by John Coker. It allows you to see very specific data regarding each rocket motor, including their thrust curves and the kits that they are compatible with. Thrustcurve.org has been built and designed around an immense amount of data provided by manufacturers and the community, and is one of the most trusted resources on the topic. For more information on Thrustcurve.org, check out the Peak-of-Flight #534 (https://www.apogeerockets.com/education/downloads/Newsletter534.pdf), written by John Coker himself.

FIGURE 4: ADVANCED CONSTRUCTION VIDEO ON SELECTING THE BEST MOTOR FOR YOUR ROCKET. (https://www.apogeerockets.com/Advanced_Construction_Videos/Rocketry_Video_304)

For more visual learners, we've prepared some great content to help you understand rocket motors (https://www.apogeerockets.com/Advanced_Construction_Videos/Rocketry_Video_279).

Selecting a Starter

After fielding questions regarding starters (also referred to as igniters) for the duration of our existence, we've created a new resource to make this process as easy as possible. Our "Sort by Igniter" page (https://apogeerockets.com/Igniter_Chooser) will allow you to look at any starter, and it will generate a list for you of every motor which it fits and

Continued on page 5

www.apogeerockets.com/Rocket-Kits/Skill-Level-2-Model-Rocket-Kits/SkyMetra

Continued from page 4

performs well. If the motor you want to use is on that list, you can feel confident you have made the right decision.

On each motor page on Apogeerockets.com, there is also a list of compatible starters, and you can check there for all applicable options for any given motor.

FIGURE 5: THE COMPATIBLE IGNITER LIST CAN BE FOUND TO THE RIGHT OF THE MAIN PRODUCT IMAGE.

Selecting a Recovery System

Most kits come with a recovery system that fits a good "sweet spot" for that particular rocket. Usually this means for smaller, lighter rockets a small parachute or a streamer will be included, while heavier rockets may include a large parachute made from stronger materials. That being said, not every kit comes with a parachute, and sometimes the parachute included is just not the right fit for your goals.

Looking for a Unique Recovery System?

Apogee has a couple of resources that can help you out. For a list of all the different recovery techniques that you could use, see the Peak-of-Flight #447 (https://www.apogeerockets.com/education/downloads/Newsletter447.pdf). It details each of the styles of recovery systems that are commonly (and uncommonly) used in hobby rocketry. Some are harder to pull off then others, but this article will give you a good understanding of what your options are.

I want a Specific Descent Rate

The best way to calculate the descent rate of a particular recovery system with your rocket is to fly it with an altimeter and calculate from the results. This doesn't really help you prepare for your flight, but rather allows you to quantify a particular recovery system with a particular rocket. The method detailed in Peak-of-Flight #187 (https://www.apogeerockets.com/education/downloads/Newsletter187.pdf) will provide you with the most accurate way to calculate this.

The only way to get an accurate descent rate without flying your rocket with a specific recovery system and timing the flight is to run simulations. By running a simulation, you can even account for weather conditions and thermals (a thermal is a warm pocket of rising air that can keep your rocket aloft for longer periods than expected).

If you don't have RockSim and just want to get a quick-and-dirty size of parachute you might need, see our article on picking parachutes at: https://www.apogeerockets.com/Peak-of-Flight/Newsletter496.

Continued on page 6

Online Resources to Prepare for Launch

Continued from page 5

If you aren't running simulations, there are a few other resources that can help you in this regard.

FIGURE 6: DESCENT RATE CALCULATOR (https://descentratecalculator.onlinetesting.net/)

The Descent Rate Calculator (https://descentratecalculator.onlinetesting.net/) can give you a rough estimation of the descent rate of any particular recovery system based on the mass of your rocket. This calculator, however, does not take into account a lot of variables that can greatly impact the performance, like wind speed, size and shape of the rocket, or X-Form parachutes. This calculator also cannot help you with streamers, dual deployment, or any kind of recovery system besides standard round, hexagon, or square parachutes. For these reasons, the estimations provided here should be taken as "optimum conditions". Most fliers are still going to want to run comprehensive simulations.

For a great resource on descent rates for dual deployment systems, check out the Peak-of-Flight #324 - FAQ's on Dual Deployment (https://www.apogeerockets.com/education/downloads/Newsletter324.pdf)

Finding a Launch Site / Club

One of the larger barriers of entry for rocketry is finding a place to launch the rockets. Most newbies don't know where is and is not acceptable to launch, and what the laws are surrounding model rocket launches.

If you are brand new to rocketry, and launching relatively small rockets, you are in luck. You have a lot of options. There are still some laws and guidelines you should be aware of, but you can find all that information in the Peak-of-Flight #516 - Do You Need A Permit to Fly Model Rockets? (https://www.apogeerockets.com/education/downloads/Newsletter516.pdf)

Do You Need a Permit to Fly Model Rockets?

By Bobby Potter

A common question for new people getting started in model rocketry is around regulations. More specifically, they ask, "do you need a permit to fly model rockets?"

The good news is that for most launches involving small model rockets, you don't. In this article, we thought we'd go over what the regulations are regarding model rockets, and exactly when you hit that dividing line where you do need permission to launch.

The Federal Aviation Administration (FAA) is the governing body in the USA charged with the handling and oversight of model rockets. In our experience, of all the government oversight departments, the FAA has been very welcoming of the hobby, and in comparison with many other nations, they have allowed a lot of free space for the hobbyist community to operate.

FIGURE 1: FAA SEAL

That being said, the FAA has classified 3 types of rockets, each with separate requirements to ensure the safety of the public and so that air traffic is not adversely affected by your launch. Here are the types of rocket, designated by the FAA, and the rules which to follow. You can find links to these rules on the Apogee website at: https://www.apogeerockets.com/Legal.

Class 1 - Small Model Rockets

A class 1 model rocket is defined by the total engine impulse as well as the materials used in making it. Your rocket would fall into this class if it is made of only paper, wood or plastic and uses no more than 4.4 ounces of a slow burning propellant. It must also weigh less than 1,500 grams (around 3 pounds) to fall under Class 1. The Apogee Apprentice (https://www.apogeerockets.com/Rocket-Kits/Skill-Level-1-Model-Rocket-Kits/Apprentice) and Aspire (https://www.apogeerockets.com/Rocket-Kits/Skill-Level-3-Model-Rocket-Kits/Aspire) kits would fall under a class 1 rocket, as would most rockets using a G-size motor or smaller.

FIGURE 2: APOGEE ASPIRE

FIGURE 7: PEAK-OF-FLIGHT #516 GOES OVER ALL THE LIMITATIONS ON LAUNCHING MODEL ROCKETS, AND EVERYTHING YOU SHOULD KNOW BEFORE YOU FLY.

That article will detail all the restrictions you should be aware of when launching model rockets, but the good news is that in most areas, for small model rockets (A-B motors) a local school yard or public park may be perfectly acceptable for you to launch in. Remember to check with

Continued on page 7

Online Resources to Prepare for Launch

Continued from page 6

your local fire department for more specific requirements in your area.

We, however, feel that the best course of action is to find and launch with a local club. These clubs offer comradery, decades of combined flying experience, pre-approved flight waivers, launch equipment and a dozen other benefits. These clubs are sanctioned through the NAR or Tripoli (or both) and have experienced rocketeers on hand to make sure the flying activities are done in the safest possible manner, and in locations that are allowed.

Finding a rocket club can be a lot easier than you might think. NAR and Tripoli both have extensive lists available on their website of all the available clubs (called Prefectures by Tripoli), with contact information and websites listed so you can check out their flying fields and reach out for more information. Here at Apogee, we've created an interactive map that allows you to find that same information by quickly looking at the clubs located in your area. You can find that map, and more information on finding a local rocketry club, here: https://www.apogeerockets.com/Launch_Sites.

FIGURE 8: APOGEE'S INTERACTIVE LAUNCH SITE MAP (https://www.apogeerockets.com/Launch_Sites)

Checking Weather Conditions at the Launch Site

Weather conditions can impact which rocket you are flying, what motors you are using, which recovery system is best for the launch, and whether or not you can launch at all. Fortunately there are a ton of resources I could point you to that allow you to check the weather conditions at any particular location.

One of our favorites is https://www.windy.com/. Windy allows you to check the wind speed and direction at any GPS location, based on information from the National Weather Service. Windy allows you to search the locations visually (by scrolling and zooming on the map), by the name of the location, or by GPS coordinates of the launch site (available on our launch site map for all the NAR and Tripoli sections).

Continued on page 8

Continued from page 7

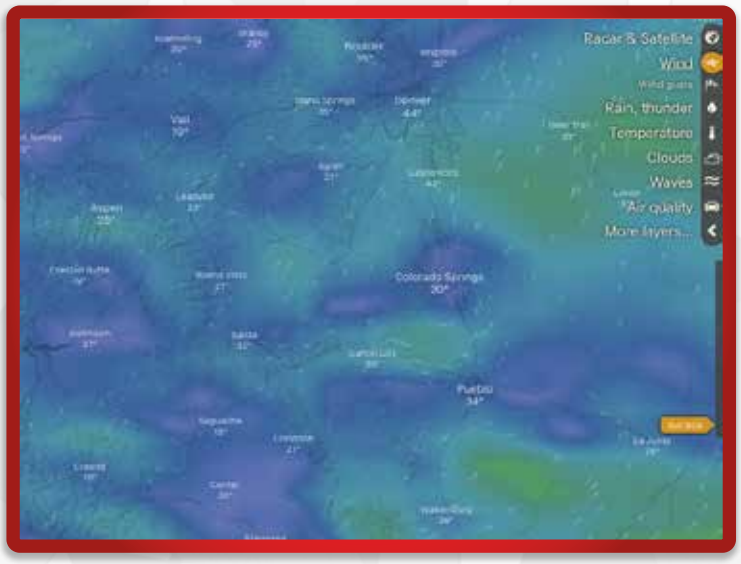

FIGURE 9: ONE OF THE MANY REAL-TIME MAPS PROVIDED BY WINDY.COM

In addition to weather information, this site will give you the forecasts for rain / snowfall, barometric pressure, humidity, and temperature - all of which can impact the performance of your rocket. This information can also be plugged in to RockSim simulations to give you a better understanding of how your rocket will perform under those conditions (which gives a big leg up for competition settings).

If you are unsure what safe weather conditions are for a rocket launch, check out the Peak-of-Flight #498: How Windy is Too Windy for a Rocket Launch? (https://www.apogeerockets.com/education/downloads/Newsletter498.pdf)

Ejection Charge Calculator

An ejection charge calculator is used to calculate the amount of black powder you should use to sufficiently pressurize the airframe in an effort to push out the nose cone and release your parachute. It can also tell you how much pressure a given amount of black-powder will produce in a given volume.

A calculator like this is typically a requirement for electronic ejection systems that ignite a black powder charge to deploy a main parachute or drogue (dual-deployment). Standard Estes black powder motors or composite motors that contain an ejection charge may not need this. However you can still use the calculator to determine if the ejection charge included is going to produce enough pressure for a larger volume airframe.

We recommend this calculator, created by Chuck Pierce. You can download it here: http://aeroconsystems.com/tips/Ejection_ChargeCalc.xls

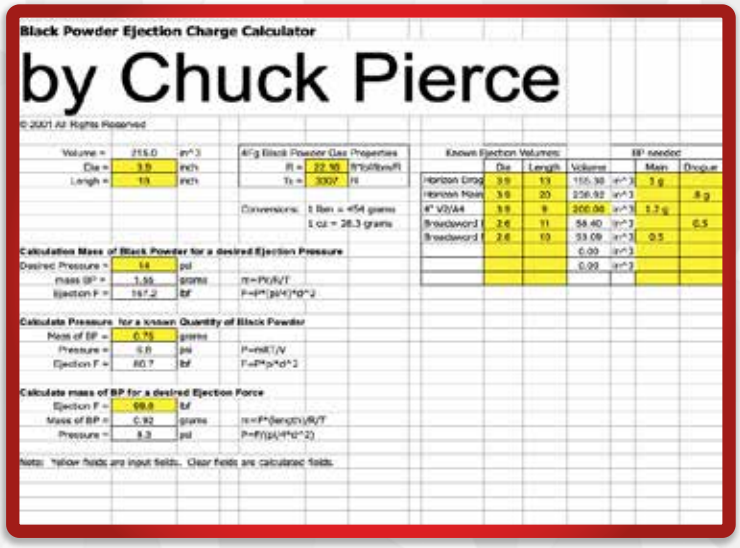

FIGURE 10: DOWNLOAD HERE: http://aeroconsystems.com/tips/Ejection_ChargeCalc.xls

Conclusion

To reiterate, there's a lot to do before you launch. You need to find a good rocket for your field, select the motor, select a good recovery system, make sure you are legal, and make sure the weather conditions are safe for flight. Hopefully, with these resources, this process just got a whole lot easier for you.

NEED A PARACHUTE? APOGEE HAS THE ONE YOU'RE LOOKING FOR!

www.ApogeeRockets.com/Building-Supplies/Parachutes

Join The NAR.org
Mention Apogee Components

Nightmare Rocket Plan

Download the ***RockSim*** design file for the Nightmare at: https://www.apogeerockets.com/Peak-of-Flight-Rocket-Plans

Nightmare Parts List

20068 - (1) PNC-33 Nose Cone

10131 - (1) 33mm Body Tube (15“ long)

12007 - (1) Motor Mount Kit 18mm/BT-55

30325 - (1) Kevlar Cord 100# X 8 feet

29126 - (1) 18” Plastic Parachute

13052 - (2) 1/8” Launch Lug

14095 - (1) 1/8” X 4” X 18” Balsa sheet

Recommended Motors

B6-4, C6-5, C12-4, D16-6

Nightmare

I’ve always liked to watch the shadows on my ceiling. Usually, they help me drift off to sleep, and I find them relaxing. I know it’s just the shadow of the trees, ruffling in the wind, cast in from the moonlight - but to me they are larger than life. The shadows tell the stories of greasy hustlers and suave gentlemen. They tell of rockets in flight, in distant galaxies and under unfamiliar stars. They tell of fantastic adventures and battles waged between the darkness and the light. Like every good story, light always wins in the end, as the sun bathes the whole place in an early morning light.

Lately though, there have been storms on the horizon. The moon remains completely obscured through the night, and the only light is from the ominous bursts of thunderous roars from the storm, quickly cut down by the blades of darkness. It’s as if the world has gone dark, and the light just can’t find a way to win.

This is what keeps me awake.

But not today. Today, the rocket launches. It tells me a different story. One of hope. It’s the most noble of causes, a journey beyond the confines of our planet on a search for truth and understanding.

Those thrusters, as they rip through the darkness of the sky, drown out the ominous storms on the horizon. It’s hope for humanity as sure as it once again bathes the canvas on my ceiling with light.

Continued on page 10

Nightmare Rocket Plan

Continued from page 9

Nightmare Decal 5”x.1.5”

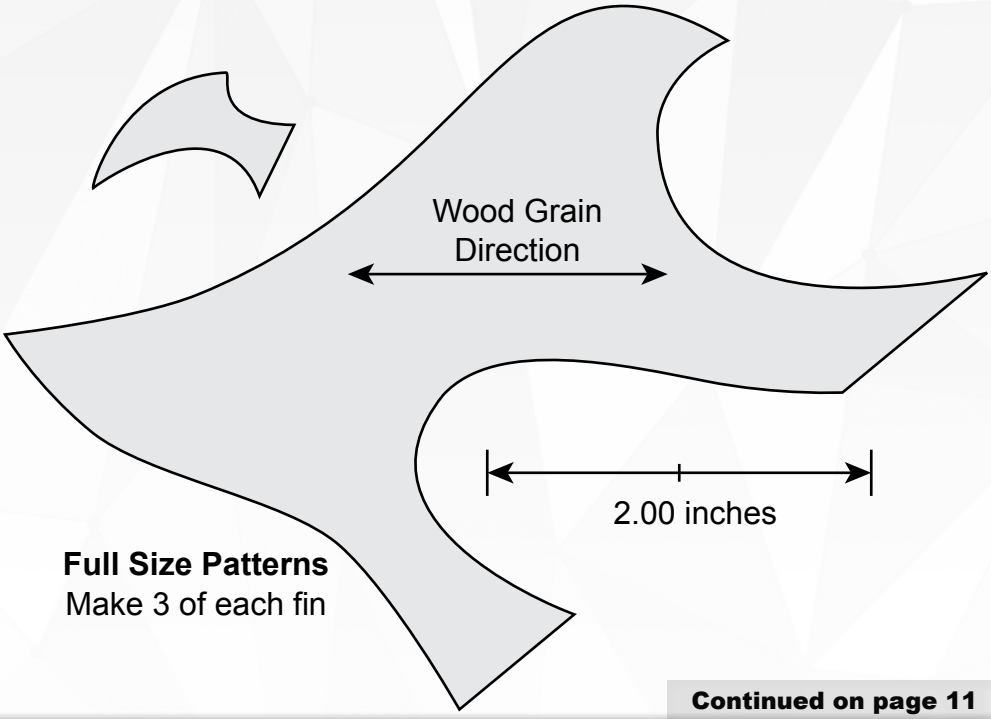

Full Size Patterns
Make 3 of each fin

Continued on page 11

Nightmare Rocket Plan

Continued from page 10

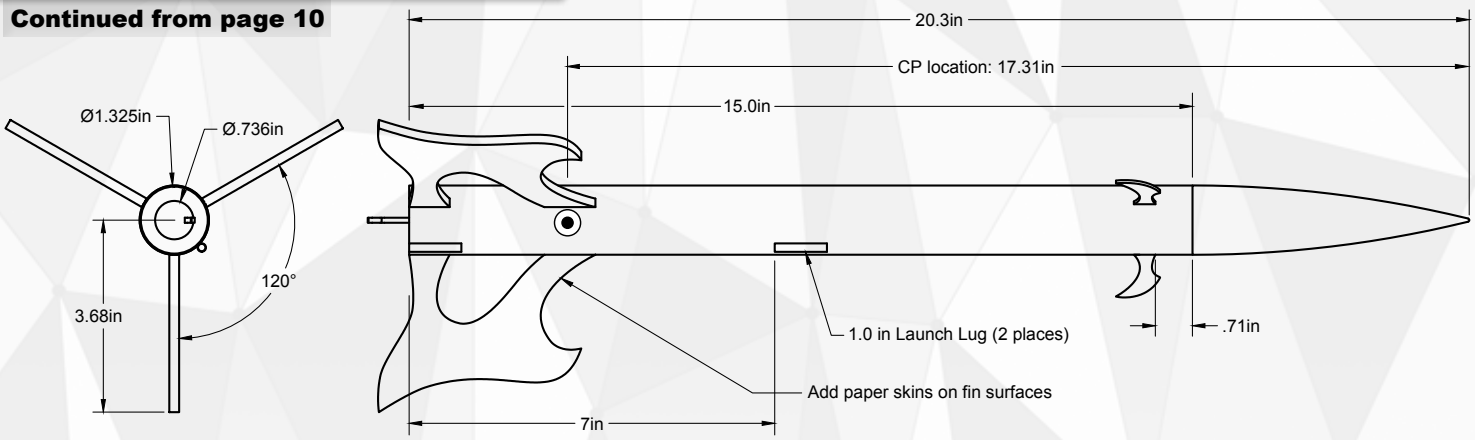

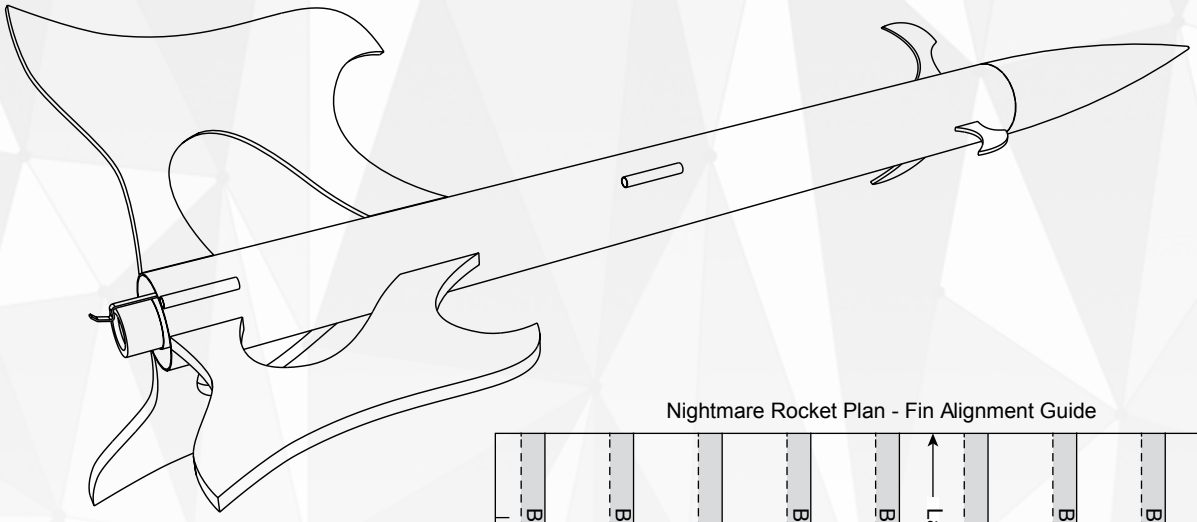
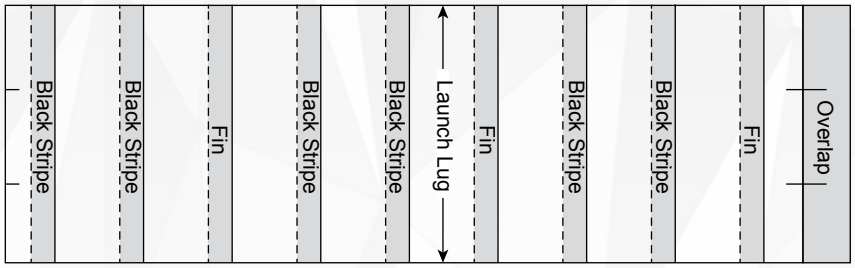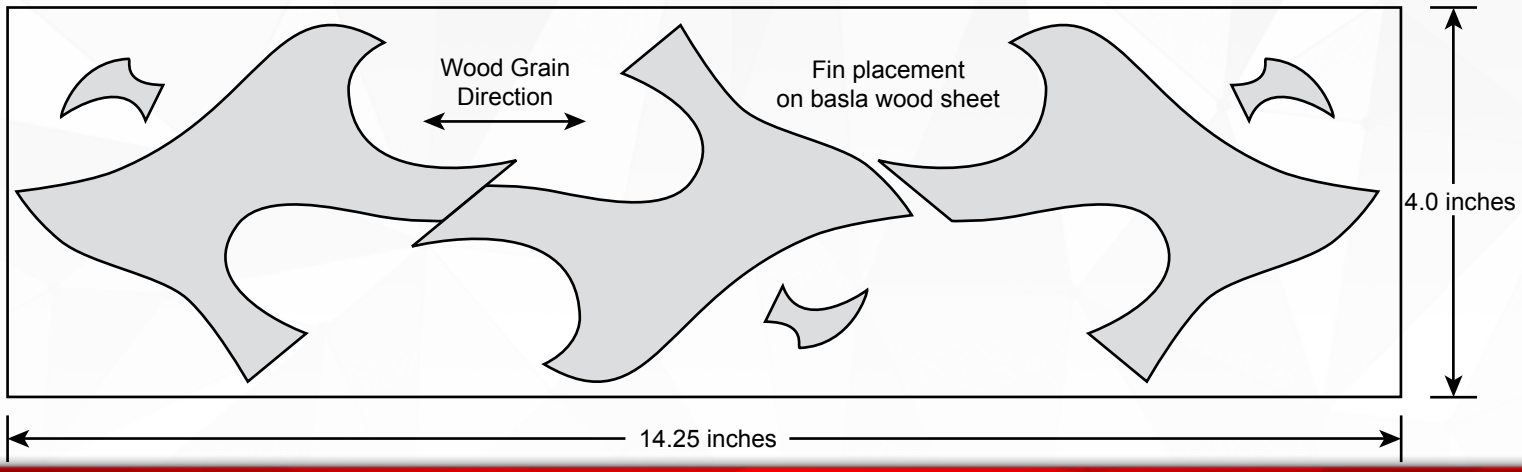
Nightmare Rocket Plan - Fin Alignment Guide