PEAK OF FLIGHT NEWSLETTER

ISSUE 548 / MAY 25TH 2021

IN THIS ISSUE

LAUNCHING MY CAREER AT APOGEE

HERMES II FREE PLAN

Available in This Issue!

https://www.apogeerockets.com/Peak-of-Flight-Rocket-Plans

www.ApogeeRockets.com
4960 Northpark Dr, Colorado Springs CO 80918
Ph# 719-535-9335

APOGEE COMPONENTS

PEAK OF FLIGHT

Launching my Career at Apogee

By Christopher Texler

{Intro by Tim} Apogee Components has been steadily growing year by year. With the growth of the company, my own role has expanded too. There are so many projects going on now that I haven't had much time in the last year to devote to product development. It was no secret that I started a search for a product development person last year, to help in the role that I had to pull away from.

Last month I got an inquiry from Christopher Texler, who is a young and enthusiastic rocketeer with design skills that even I don't possess. After going through the interview process, I'm happy to introduce him to you as our newest teammate. As one of his first assignments, I asked him to keep notes as to what his first week was like here at Apogee, and what new information he has learned. That is what the rest of this article is about, so you can get a little bit of the flavor of what it is like to work with great customers like you.

Rocketry grabbed me much like other rocketeers I've met: pretty obsessively from the beginning. Every single element of the process from learning the basics to building and launching and reviewing flight data was fascinating to me from the first time I received a kit as a gift. Little did I know how far it would take me.

For me, rocketry became more than just a hobby or a passion--it was something that taught me the power of mentors (which I still appreciate in many areas of my life), and flying was also something I was excited to share with others. A major inspiration was when those I admired took the time to teach me and inspire me to keep going.

Rocketry and my passion for rocketry has even influenced my major in college and educational background, as I've always known that I've wanted to go into a rocketry-focused job and tailored my path along the way to learn as much as possible to get myself there.

CHRISTOPHER TEXLER HOLDING THE HERMES II ROCKET

I'll never forget years ago when I wrote a letter to Apogee letting them know how much I liked their products and the information on their website--and got a personal response back! I've kept that email ever since then, and it gave me the guts to recently let them know how much I wanted to join the team. So, low and behold, I'm actually here, working at Apogee now, getting to do what I love every day with fantastic people.

Check out our Facebook page
www.facebook.com/ApogeeRockets

Continued on page 3

About this Newsletter

You can subscribe to receive this e-zine FREE at the Apogee Components website www.ApogeeComponents.com, or by clicking the link here Newsletter Sign-Up

Newsletter Staff

Writer: Christopher Texler
Layout & Cover Artist: Derek Villar
Proofreader: Michelle Mason

Launching my Career at Apogee

Continued from page 2

So what was the first week like? Well, I'm not going to lie; I was just as anxious on my first day as I was when I first reached out to see if I could work for Apogee. The first morning it hit me: I was actually walking through the front door of the place that had made the rocket kit I had received when I was young, but this time I was walking in as an employee. There I was, at the physical location of the company that had launched my interest, provided the tools for me to soar, and even had helped me develop my own style of rocketry. Instead of just making a pilgrimage as a customer, I was starting my dream job.

Learning the ropes

After the initial introductions to my team and learning where things were, I got to jump into finding out where the raw materials for building everything from the most miniature, most detailed scale rockets to the monster high powered rockets were located. But the most significant impact on my first day was that I was treated as a fellow rocketeer, not "just the new kid."

I immediately began learning how to use much more advanced RockSim software than I had before to design actual flying rockets, and I got my hands dirty in a good way by starting in on builds. Right away, education through hands-on experience was at the start of my career here at Apogee.

I also was shown how the meeting structure worked, what daily meetings, marketing meetings and staff meetings looked like, and I got to see how that really brought the team together. Being able to communicate to solve issues together as a team is a really cool aspect of Apogee that I've gotten to be a part of from my first day here, not to mention all the other skills and things I've already been learning.

Apogee has always been admirable to me for the amount of education shared in a variety of ways with anyone interested, and I found that being on the ground floor is no different. I'm seeing how much further I'll be able to go in my passion and career.

My First Project

On my first day, I was given the responsibility for a new rocket kit project. This project was a very easy-to-design rocket and was simply to help teach me the basics of how Apogee does its workflow. The rocket was a ½ scale model of one of Apogee's existing high-powered rocket kits called the Zephyr. The new kit will be called the "Zephyr Jr."

Continued on page 4

Launching my Career at Apogee

Continued from page 3

First, I had to design the rocket in the CAD program, “Fusion 360” to build up a digital reference model. I was happily surprised that it felt natural since I was doing the same thing with the rockets that I had scratch-built, but this time it was for a kit that others would share the experience of building. As a result, I became ultra-aware of exactly where I was pulling parts from and how the rocket would fit together in a kit format.

For the first days of my job, I was already immersed in working with what I love, yet also seeing rocket kits truly through the eyes of others: such as the grain orientation of the balsa wood. It isn’t as simple as cutting out a fin from a single piece of wood. The slot near the tip and the point on the trailing edge of a fin dictated a major redesign of the fin. You have to design the model from the customer’s perspective. My first week also taught me bonus life lessons I didn’t expect.

Production Rockets are much more than your average scratch builds

Through my first project at Apogee, one of the essential things that I learned was that production rockets are much different than one-off scratch-builds. I have built quite a few rockets, both from kits and also of my design, and because of this, I have developed my way of doing things. I had gained a pretty good level of proficiency in different skills and techniques, such as tabbed fins and making custom parts for each rocket. But I learned that my way of doing things wouldn’t necessarily be the way everyone would want to do them, and I was going to need to incorporate plenty of flexibility.

Production rocket kits need to be able to be built by people. This may seem like a very obvious statement, but the key word here is people, like YOU. Most people aren’t lucky enough to get a chance to devote their lives to rocketry and spend weeks building a rocket. That doesn’t mean they shouldn’t be able to enjoy rocketry, though, so now a big part of my role is to take into consideration what I can do for others to both learn about building as well as enjoy flying. It was the realization that smaller rocket kits would need to be able to be built by one or two people, perhaps in the span of an afternoon. Because of this, things like fin tabs and making custom parts just won’t work in every circumstance, so I had to find workarounds.

There’s also the “fun” factor to be included in the creation of rockets. After all, isn’t this what it’s all about? This sport brings families together and teaches people of all ages and backgrounds. It motivates kids in school and creates comradery at events. That doesn’t mean that it

Continued on page 5

Launching my Career at Apogee

Continued from page 4

can't be challenging, but it does mean seeing the sport from other points of view, and this is a fantastic way for me to remember the power of rocketry to mean something different to everyone.

There's also the educational aspect of the actual physical kit to be considered, as well. Scratch-built rockets don't need a lot of support materials, i.e., instruction manuals, pop-out fin sheets, etc. After a good number of years and experience in rocketry, I began primarily designing and building scratch-built rockets for myself to fly at events. Whenever I've needed to cut out a fin, I've just designed the shape and cut it out, or when I've needed to know how to put something together, I've just referred back to the design and any notes I've made when it's been for a rocket I'm going to be the only one flying.

Here at Apogee, with production rockets, I now have to consider things such as how to make an instruction manual for people who may have never built a rocket before. It's a neat aspect of this job: I see rocketry through the excitement of a beginner's eyes. It's also a very rare experience, as there just aren't companies that make instruction manuals and other supporting materials in the way that Apogee does.

I have to stay sharp with things I had begun to take for granted. I need to not only inventory every part I make, but also fit all of the laser-cut parts into the smallest form factor plank possible while also adding things like tabs, so the assembly stays together until the customer pops the fins out. I've also needed to brush up on my construction skills and relearn how to build rockets from a completely different angle than I've experienced before.

Another thing I've realized is that production parts need to be strong--as in really strong. On my own, my design knowledge inherently came with my understanding of all of the "weak" points in the rocket. Things like sharp cornered or oddly shaped fins would often be slightly more fragile than the rest of the rocket I was working on for just myself. Because I was the only one building, flying and analyzing the rocket, I knew what precautions to take.

However, on production rockets, I need to design every part of the rocket to be roughly handled. This might mean re-designing fins with fragile parts to be built out of several pieces to take advantage of the wood grain or adding extra reinforcement to some parts. This has given me the chance to slow down and think through every aspect of what had become natural to me over the years. Thinking through things like this is a good life lesson: to account for multiple angles on any project.

Continued on page 6

Launching my Career at Apogee

Continued from page 5

This was just a fraction of what it was like in my first days and my first project. It's amazing to see how much I'm discovering, not only in the methods of production rockets but even new ways of working through challenges that I hadn't considered. My first project is still very much an ongoing adventure, and I hope to release it soon as my very first official product at Apogee; that is, after I wrap up the instruction manual.

Making the Unflyable Fly

My second project really let me flex both my creative muscles and technical skills in a way I had never done before. For this project, I was tasked with designing and building a rocket for the Apogee newsletter's free rocket plan. Because developing new rockets is now an essential part of my job, I would not just design and build a generic looking, "boring" rocket.

I took the opportunity to look through some of the stranger-looking rockets that I have thought of making in the past. I stumbled onto a video I had watched a couple of months ago by a science educator titled "The Worst Looking Rockets Ever Designed!" At the time, I had watched this video out of curiosity, learned about some rockets I had never heard of before, and stored it in the back of my mind for when I might need that information. And this was the perfect opportunity--after all, now I was designing a rocket for the public to see and build, why not make it a model of an unusual-looking historical rocket that actually flew? In my role, I found that I could also use this to teach people about a historical rocket that they might not have known about. So this became yet another way to share the educational side of rocketry and in a subtle and fun way.

After choosing which rocket I was going to attempt to make, the next step was designing it, which is where the first issue cropped up. I wanted to use as few custom parts as possible while still capturing the image of the rocket and managing to somehow make it flyable.

The rocket I had decided to attempt to design and build was challenging as the V2 variant has a sizable canard-style wing at the top of the nose cone. V2 rockets are fairly difficult to capture the shape of due to the nearly organic curves that form the rocket, and adding a canard to the nose cone only complicates the design.

The other hurdle that had to be overcome was how to make the model fly since it was a relatively stout rocket with wings at the top. The first step required making a very accurate RockSim simulation of the model to figure out where to add weight to make it stable.

Since most of my experience prior to getting my job at Apogee had been in OpenRocket, a similar but differ-

Continued on page 7

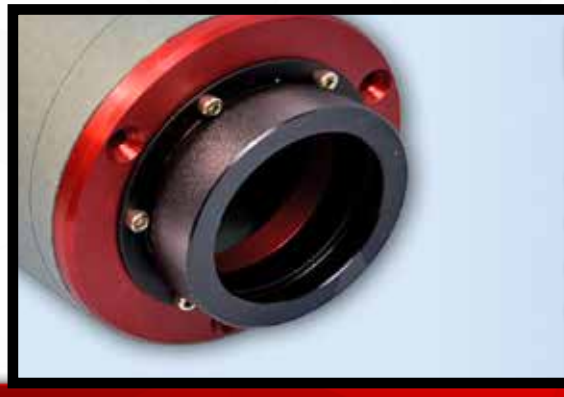

Experienced HPR Builders Use Thrust Plates

- Eliminates Shear Forces on Centering Rings
- Mates with AeroPacks Flanged Engine Retainers
- Fits Standard HPR Tubes, Blue Tubes, and Fiberglass Tubes
- Made from Aircraft Grade Aluminum

https://www.apogeerockets.com/Building_Supplies/Thrust_Plates

Launching my Career at Apogee

Continued from page 6

ent software, I had only designed a couple of rockets in RockSim and was still learning the software. The benefit of Rocksim over OpenRocket is that I can create more complex shapes in Rocksim--which was required for the design of the rocket I had chosen for the newsletter.

After I had designed the rocket in RockSim, I was able to add virtual weight to the nose cone of the rocket until it was simulated as stable, and then I was able to add an equal amount of weight with clay in the actual build process.

After completing a physical example of the rocket and prepping it for flight, I had the opportunity to give it a test flight to, as the name suggests, test it out. I learned some valuable things from this test flight, and got the rocket back in one piece, which is always a bonus. Using the things I had learned, I was able to go back and make slight modifications to the design and improve the rocket with the help of my fellow coworkers and supervisor to make it that much better.

This second project I was given at Apogee has taught me many things and has challenged and encouraged me in designing and building skills. I've faced and overcome unique problems and built something that I not only wouldn't have had the capability to build but likely wouldn't have even attempted otherwise. Stretching personal boundaries is a good thing to strive for when it can positively impact.

What other important opportunities have there been during my first week at Apogee? Many rocket-related fun and sometimes frustrating projects, but there's a big one to include: writing this article. Being a well-rounded rocketeer means also being a well-rounded person. Writing isn't my

first love (or second or third), but it's incredibly important. Sitting down and doing this missive gives me an appreciation for what I had almost taken for granted about Apogee: a shared experience through communication. Keeping the conversation going by providing consistent outreach needs to be continued for innovative and engaging conversations. Giving people a glimpse of how much the people care that make the kits you enjoy is exciting. And finding out what strikes a chord with others in the rocket community is a fantastic bonus. It's been another wake-up call to remember what's important.

Yes, there are many more things I've gotten to do in just my first week, but I think the most important thing I've done is start with an open mind and an excitement to learn.

Hermes II Rocket Plan

Download the ***RockSim*** design file for the Hermes II at:
https://www.apogeerockets.com/Peak-of-Flight-Rocket-Plans

Hermes II Parts List

20080 - (2) PNC-66A Nose Cone
10198 - (1) AT-66 Body Tube (5.7” long)
10100 - (1) AT-24 Body Tube (5.3” long)
13037 - (2) 24/29 mm Centering Ring
13408 - (1) 24/54 mm Centering Ring
30326 - (1) Kevlar Cord 300# X 8 feet
29093 - (1) 24” Parachute
14096 - (2) ⅛” X 4” X 18” Balsa Sheet
13057 - (1) ¼” Launch Lug
(1) 100g Clay Nose Weight

Hermes II *By Christopher Texler*

About the Design

The Hermes II missile was a variant of the V2 rocket that had been brought to the White Sands Proving Ground from Germany and heavily modified for testing campaigns as a possible early cruise missile. The V2 boosted a payload which was a forward-mounted, winged, ramjet engine testbed. Due to the large wings of the payload, the V2’s tail surfaces needed to be enlarged to keep the rocket stable.

The success of the Hermes II project is unknown, as it was highly classified during its development, but the planned mission profile of the Hermes II was known. The basic concept was to get the payload up to a Mach number beyond 3 and separate it from the V2 booster. Once separated, the ramjet would be ignited and the payload would fly off on a preprogrammed flight path, leaving the booster to fall back to Earth.

The Hermes II missile and Hermes project as a whole were some of the earliest projects developed by the German engineers brought to the U.S. as a part of Operation Paperclip and under the guidance of Werner von Braun. He envisioned that linear ramjet engine-powered cruise missiles could eventually reach speeds of over Mach 3 and have ranges of over 2400 km, however, this was not to be. Because Werner von Braun’s team was working under the army, when the responsibility of the development of long range missiles was handed from the Army to the Air Force, project Hermes was cancelled. To this day, only one flight of the Hermes II missile has ever been confirmed, and it has become a relic of the 1940s-50s when rocket design was a vast, uncharted landscape.

Continued on page 9

Check out our Facebook page
www.facebook.com/ApogeeRockets

Hermes II Rocket Plan

Continued from page 8

This particular model of the Hermes II missile was inspired when I was looking at a record of historical flights out of the White Sands Missile Range, and stumbled upon the design. It looked like a challenging design to build, and even more challenging to fly, so I decided to run with it and see where it took me. After simulating it in Rocksim, I found that, with enough nose weight, I could make a stable design specced around BT-80 hardware and it would happily fly on F class motors with the change of canted trailing edges on the fins being added after the first test flight.

Sources:

http://www.astronautix.com/h/hermesb-1.html
https://www.whiteeagleaerospace.com/the-hermes-ii-incident/

Build Notes

- Sand the edges of the fins and canards that will be contacting the body of the rocket for a more precise fit
- Dry fit the motor mount assembly together and put into rocket boat tail before gluing to assess the proper distances for the centering rings
- Use 100 grams of nose weight
- Use Fix-It epoxy-clay to get a perfect fillet for the fins and canards and to strengthen them
- The aft fins have a trailing piece that is canted. To make this easier to assemble, sand the contacting edge of the trailing piece so that a ⅛" piece of balsa can slide under the tip to be used as a jig for gluing, as shown below.

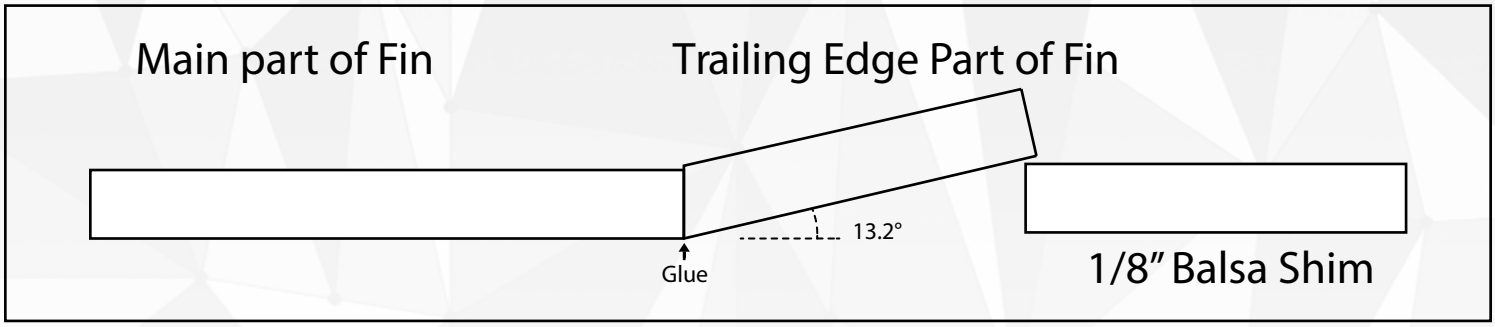

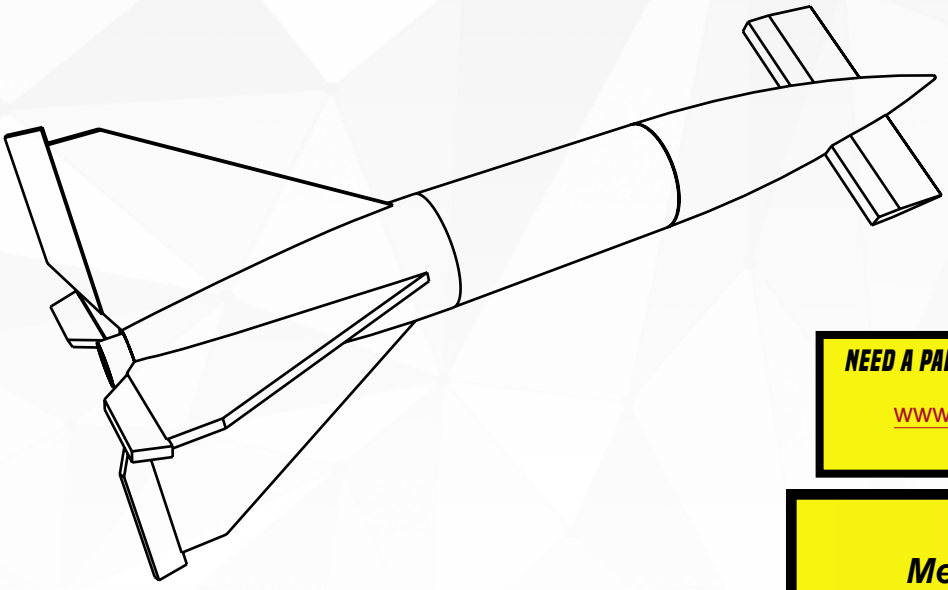

Flight Notes

This rocket does not like wind on account of the two giant canards at the nose cone; however, on a good flying day and flying off of an F 30-6, it'll reach over 700 feet with no problems.

Continued on page 10

NEED A PARACHUTE? APOGEE HAS THE ONE YOU'RE LOOKING FOR!
www.ApogeeRockets.com/Building-Supplies/Parachutes

Join Tripoli.org
Mention Apogee Components

Hermes II Rocket Plan

Continued from page 9

Side View

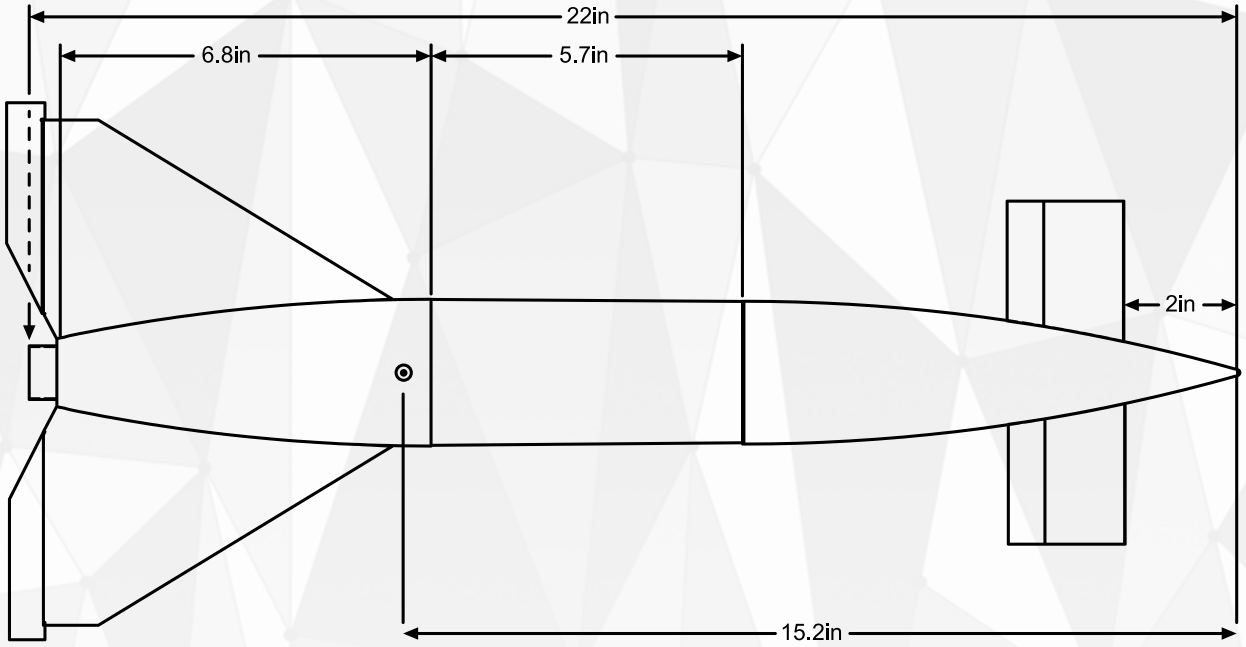

Rear View

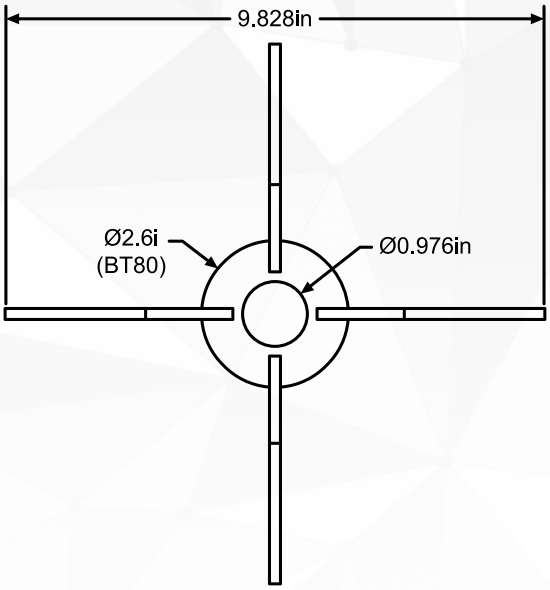

Front View

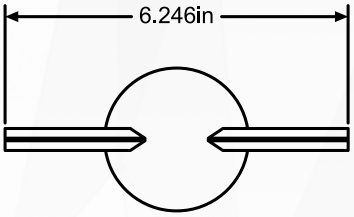

Rear Cross Section

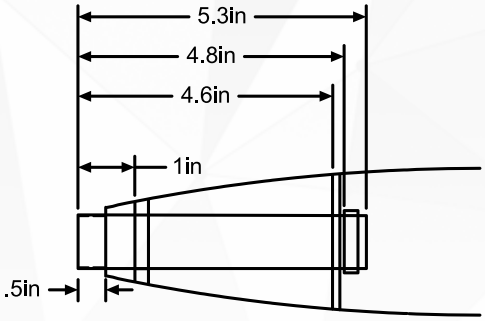

Continued on page 11

Hermes II Rocket Plan

Continued from page 10

Fin Templates

(Lines indicate wood grain direction)

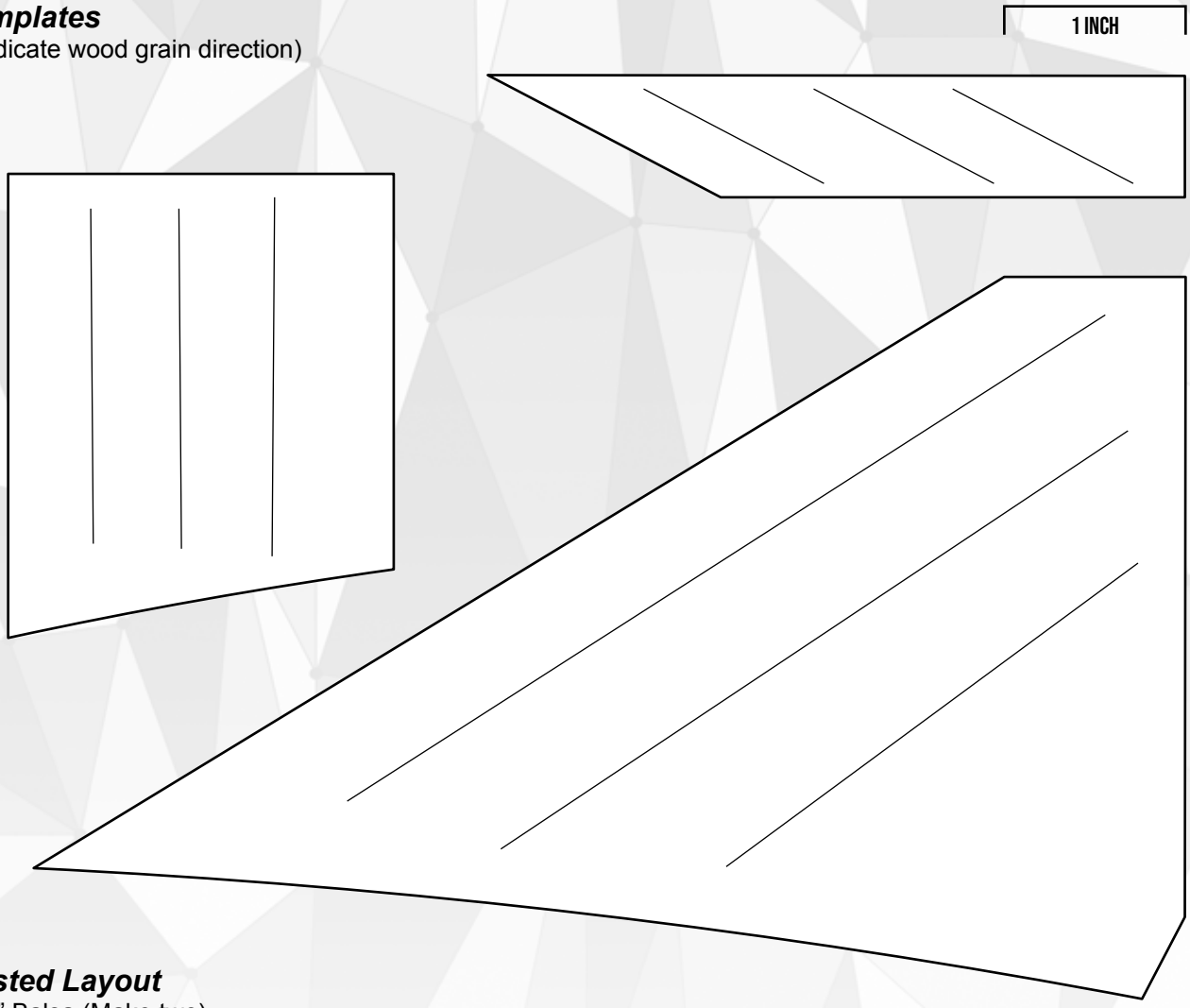

Suggested Layout
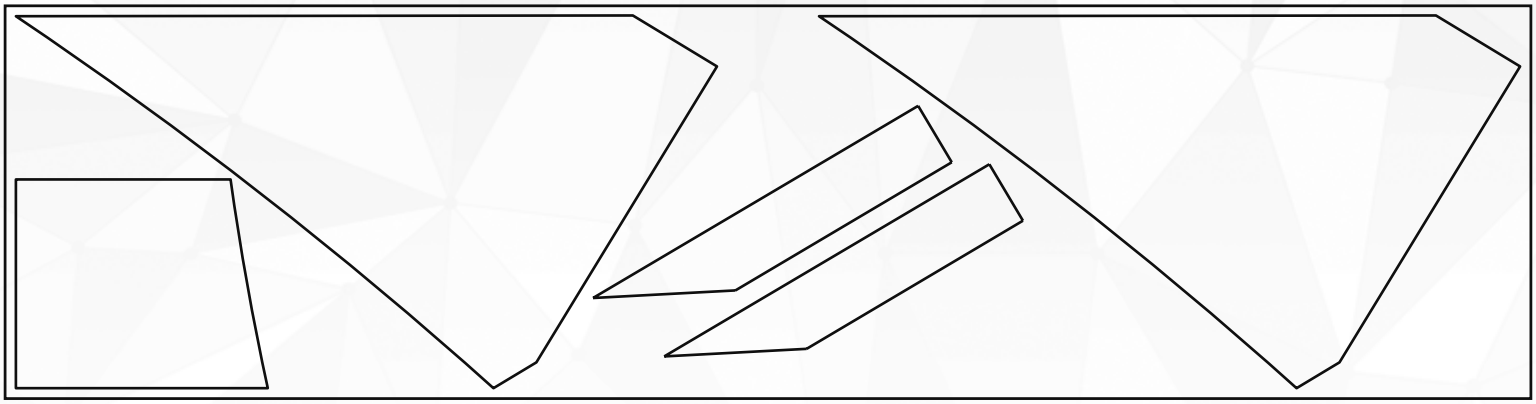
4” x 15.5” Balsa (Make two)