PEAK OF FLIGHT NEWSLETTER

ISSUE 553 / AUG 3RD 2021

IN THIS ISSUE

- ON THE ALTITUDE OF MAX Q
- STARTING YOUR ELECTRONICS JOURNEY

MINI NIKE SMOKE FREE PLAN

Available in This Issue!

https://www.apogeerockets.com/Peak-of-Flight-Rocket-Plans

www.ApogeeRockets.com
4960 Northpark Dr, Colorado Springs CO 80918
Ph# 719-535-9335

APOGEE COMPONENTS

PEAK OF FLIGHT

On the Altitude of Max Q

By John D Sahr

Abstract

When observing rocket launches, observers will note that the color commentary frequently identifies the altitude of "Max Q," the altitude at which the rocket experiences the greatest aerodynamic stress. Interestingly, this altitude is invariably somewhere around 10-12 km. Why should this be? Why shouldn't it be 3 km for some rockets, and 30 km for others? In this report we will show that the altitude of Max Q depends primarily upon the scale height of the atmosphere, and not upon any parameter of the rocket itself.

1 Introduction

In order to approach this problem we will have to make some simplifying assumptions.

1. The rocket has constant acceleration a during its flight. This is obviously not correct, but for large rockets with one stage "Main Engine Off" well above Max Q, it's not a terrible assumption.
2. The Coeffiicient of Drag C_D is constant. This is clearly not correct for subsonic and supersonic flight, but on the other hand it's probably not a huge factor.
3. Max Q is defined to occur when the drag force F_D is greatest.
4. The atmospheric presssure and density scales as exp(–*h/H*) below about *h* = 40 km, where *H* is the scale height of the atmosphere, which is about 8 km on Earth (at sea level). (For more information about the definition of scale height see: https://en.wikipedia.org/wiki/Scale_height)

2 Some Equations

2.1 Rocket Drag

The Drag force on a rocket is as follows:

$$F_D = \frac{1}{2}\rho v^2 C_D A$$

Where

$$\begin{aligned} F_D &= \text{drag force on rocket} \\ \rho &= \text{atmospheric density} \\ v &= \text{rocket velocity} \\ C_D &= \text{coefficent of drag} \\ A &= \text{frontal area of rocket} \end{aligned}$$

2.2 Atmospheric Density Model

As mentioned above, the atmosphere can be pretty well modeled by an exponential model.

$$\rho(h) = \rho_0 \exp(-h/H)$$

Where

$$\begin{aligned} \rho(h) &= \text{atmospheric density at altitude} h \\ h &= \text{altitude} \\ H &= \text{scale height of the atmosphere; about 8 km on Earth} \end{aligned}$$

Check out our Facebook page
www.facebook.com/ApogeeRockets

Join Tripoli.org
Mention Apogee Components

Continued on page 3

About this Newsletter
You can subscribe to receive this e-zine FREE at the Apogee Components website www.ApogeeComponents.com, or by clicking the link here Newsletter Sign-Up

Newsletter Staff
Writer: John D Sahr & Christopher Texler
Layout & Cover Artist: Derek Villar
Proofreader: Michelle Mason

On the Altitude of Max Q

Continued from page 2

2.3 Rocket Motion Model

$$h = \frac{1}{2}at^2 \quad (3)$$
$$v = at \quad (4)$$

These equations can be manipulated to provide velocity as a function of altitude:

$$v = \sqrt{2ha} \quad (5)$$

3 Drag Force Versus Altitude

The equations in the previous section can be combined to form an expression for F_D in terms of h as the only variable. Note that we have assumed that the acceleration a is constant.

$$F_D(h) = \frac{1}{2}\rho_0 \exp(-h/H)(2ha)C_D A \quad (6)$$
$$= \left[\frac{1}{2}\rho_0(2a)C_D A\right] \exp(-h/H)h \quad (7)$$
$$= [\rho_0 a C_D A H] \exp(-h/H)h/H \quad (8)$$
$$F_D = [\text{constants}]\, e^{-x} z \quad (9)$$

So, to maximize F_D we need to find where $e^{-z}z$ is maximum. As it happens, the maximum occurs for $z = 1$ or $h = H$.

In other words, the altitude of MaxQ occurs at the scale height, about 8 km above the launch altitude.

In practice, the actually altitude of MaxQ is a few km higher, but that is because of the non constancy of C_D and a. You will notice that the flights are frequently operated to throttle back near MaxQ, which helps explain raising MaxQ above 8 km.

www.ApogeeRockets.com/RockSim/RockSim_Information

www.apogeerockets.com/Building_Supplies/Launch_Lugs_Rail_Buttons/Rail_Buttons

PEAK OF FLIGHT

Starting Your Electronics Journey

By Christopher Texler

You may have seen other rocketeers turning on boards with flashing LEDs or screaming buzzers recently at your last launch, or maybe you've come across people putting "flight computers" and "GPS trackers" in their rockets and posting them online. Either way, you've become intrigued by this fascinating aspect of rocketry involving electronics and want to learn more. Well, you've come to the right place!

What are the six basic "food groups" of electronics

Before we can jump into stuffing all of the wires, batteries and gadgets possible into our rockets, it is important to first understand the six basic "food groups" of electronics:

FIGURE 1: BEACON

1. First, you have the most basic style of electronics, the beacon. Beacons are noisemakers, literally! A beacon's job is to make a lot of noise and sometimes flash a light in the simplest way possible to make it easier to find your rocket and as such, they are the easiest entry into electronics. A basic beacon is normally turned on by plugging in the battery and power source, it stays on until you recover the rocket and promptly remove the battery/power source due to the beacon's slightly annoying sound.

FIGURE 2: CAMERA

2. Right along with the level of beacons, you have cameras. Cameras are one of the most popular types of electronics for new rocketeers to put on their rockets, and for good reason. Cameras are not only very easy to use, but most rocketeers may have already had experience with cameras such as action cameras or the camera in your phone. Cameras also provide an immediate and relatable view and ability to listen into what the rocket is doing, without having to develop the intuition that comes with more detailed data analysis. Hooking up a camera is also fairly easy, with most cameras coming with an internal battery and onboard on/off switches.

Continued on page 5

Starting Your Electronics Journey

Continued from page 4

FIGURE 3: ALTIMETER

3. Next, you have your basic altimeters. These are a little more complex than the previously mentioned beacons and cameras but are still pretty to use. When you turn them on, they'll start recording the current altitude of whatever they're attached to. Different altimeters will report their altitude differently, with some reporting the max altitude on a screen or through a series of blips from an LED or buzzer, and some needing to be plugged into a computer to show a more detailed breakdown of the recorded data. Altimeters offer the benefit of simplicity and ease of use, with the drawback of not being able to do more than record altitude and report it back after you've recovered the rocket.

4. The next level up from altimeters is trackers. The main difference between trackers and beacons is complexity. Whereas beacons are built to be as simple as possible, trackers are more complex and require more skill to operate. The benefit of trackers over beacons is the range extension given by trackers. Trackers primarily use either GPS or radio pulse navigation processed by a computer chip on board to figure out their relative position in the reference point of a ground station, which allows for much longer range navigation and more precision than a beacon. Trackers are more complex however, and normally rely on an external power source and/ or switch to operate, which usually requires a little more electronics knowledge to set up then a beacon where it's "plug and play". Some longer range trackers also require special licences to operate, as they utilize different radio frequencies to communicate over longer distances.

FIGURE 4: SIMPLE GPS TRACKER

Continued on page 6

Starting Your Electronics Journey

Continued from page 5

FIGURE 5: DUAL DEPLOYMENT ALTIMETER

5. The penultimate level in electronics is the dual deployment altimeter. Dual deployment altimeters are basically upgraded altimeters that can trigger events on the rocket. They do this by analyzing the data from an internal altimeter (hence, the “altimeter” in the name) and send an electrical signal out when certain events are reached in the flight, such as apogee. Dual deployment altimeters are critical to rockets reaching high altitudes or utilizing dual deployment recovery systems. Just like trackers though, dual deployment altimeters require an external power source and a switch as well as extra wiring if the altimeter is being connected to a dual deployment system.

6. The final and peak level of rocketry electronics is the flight computer. Flight computers take many of the previously mentioned electronics and stuff them into a single system, capable of doing tracking, many deployment events, high level data recording and even a buzzer for both short range beacon-style tracking and reporting status. Flight computers are like the swiss army knife of rocketry electronics in that they can pretty much do anything needed on even the biggest of rockets, but this functionality does come with some drawbacks. Flight computers are normally much more complex and difficult to set up than any other type of electronics and require a practiced understanding and experience of all the different levels of electronics to operate. However, if you are flying a large, complex rocket, there’s nothing that can beat the versatility offered by a flight computer.

FIGURE 6: FLIGHT COMPUTER

Mini Nike Rocket Plan

Download the ***RockSim*** design file for the Mini Nike at:
https://www.apogeerockets.com/Peak-of-Flight-Rocket-Plans

Mini Nike Parts List

29620 - (1) 1/8” Quick Link
29625 - (1) Large Screw Eye
14099 - (1) Balsa Sheet - 1/8” x 3” x 18”
00522 - (1) AVION NOSE CONE SCIENCE FAIR KIT (24MM)

Mini Nike *By Christopher Texler*

About the Design

The original Nike Smoke rocket was a project that utilized a derivative of the Nike rocket booster as its own sounding rocket to conduct atmospheric research in the 1960s during the space race. The rocket has cemented itself in the minds of rocketeers and the general public alike because of its long, slender nose cone that makes up almost half of the entire rocket’s length.

Because of this, the Nike Smoke rocket has been reproduced in the world of model rocketry multiple times and in many different ways from very high fidelity scale models, to larger and heavier high powered versions. This rocket continues to live on through its duplications.

In researching what I wanted to create for this week’s free plan, I was given the deceivingly simple task to make the free plan a “skill level 1 rocket”, or in other words, as straightforward and easy to build as possible. At a surface level, this might seem easy to follow, as there are many skill level 1 rockets to gain inspiration from and Apogee even makes and sells a couple. However, I really wanted to stretch my creative muscles and come up with something that adhered to the concepts of a skill level 1 rocket, while looking and flying like a scale Nike Smoke. Because of this, I decided to do something called a “kitbash” of a previous skill level rocket that Apogee had developed, specifically the Avion rocket kit. Kitbashing is when someone takes an already developed kit and utilizes parts from other kits and sources to transform that kit into something entirely different; and I felt that, through utilizing this technique, I could use the Avion as a base to create something new while still only using “Skill Level 1” skills.

What ended up coming out of this process is more of a mash up between a Nike Smoke design and Apogee’s Avion kit. It’s not quite as long as an Avion, yet it’s longer than a Nike Smoke of its scale would be. It even utilizes the same motor mount as the Avion, just getting rid of the motor hook to allow for an easier building process.

After polishing out some of the details, what ended up coming out of this process was a good looking rocket that is easy to build, will impress at the flying field and will happily reach over 700 ft on a B6 motor.

Continued on page 8

Mini Nike Rocket Plan

Continued from page 7

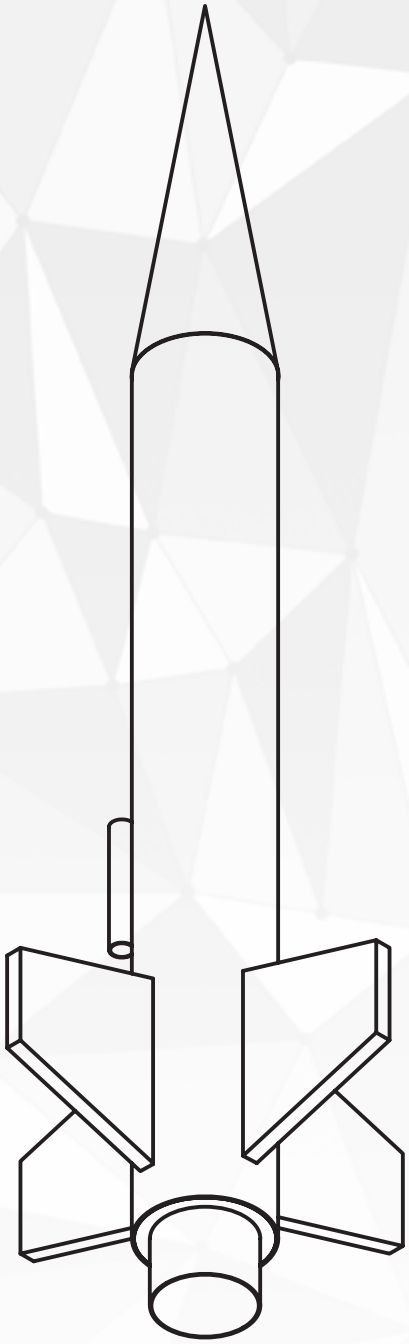

Build Notes

- Screw the recommended Eye bolt into the bottom of the Balsa nose cone shoulder and attach the shock cord using the recommended quick link, these might seem overkill, but they're mainly there for nose weight
- Use the method shown in the Avion instructions to tie the shock cord onto the motor mount
- Use tape retention on the motor

Fin Template

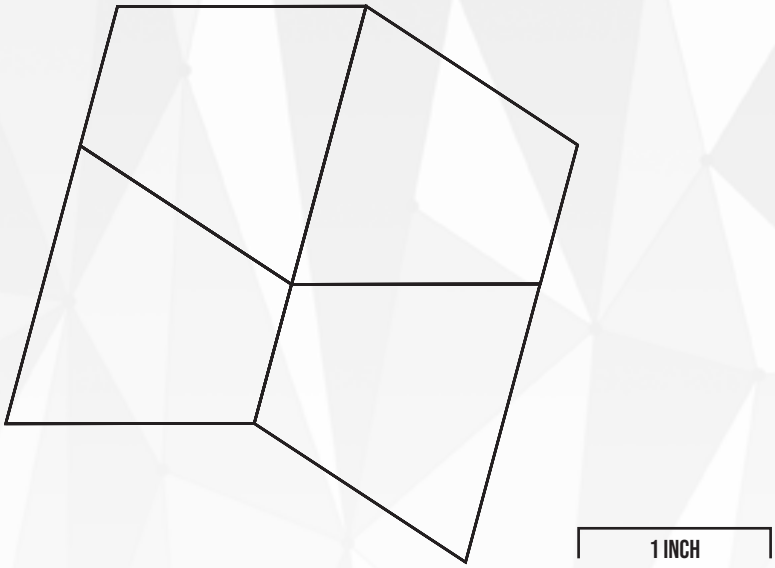

Decal

Continued on page 9

Check out our Facebook page
www.facebook.com/ApogeeRockets

NEED A PARACHUTE? APOGEE HAS THE ONE YOU'RE LOOKING FOR!
www.ApogeeRockets.com/Building-Supplies/Parachutes

Mini Nike Rocket Plan

Continued from page 8

Side View

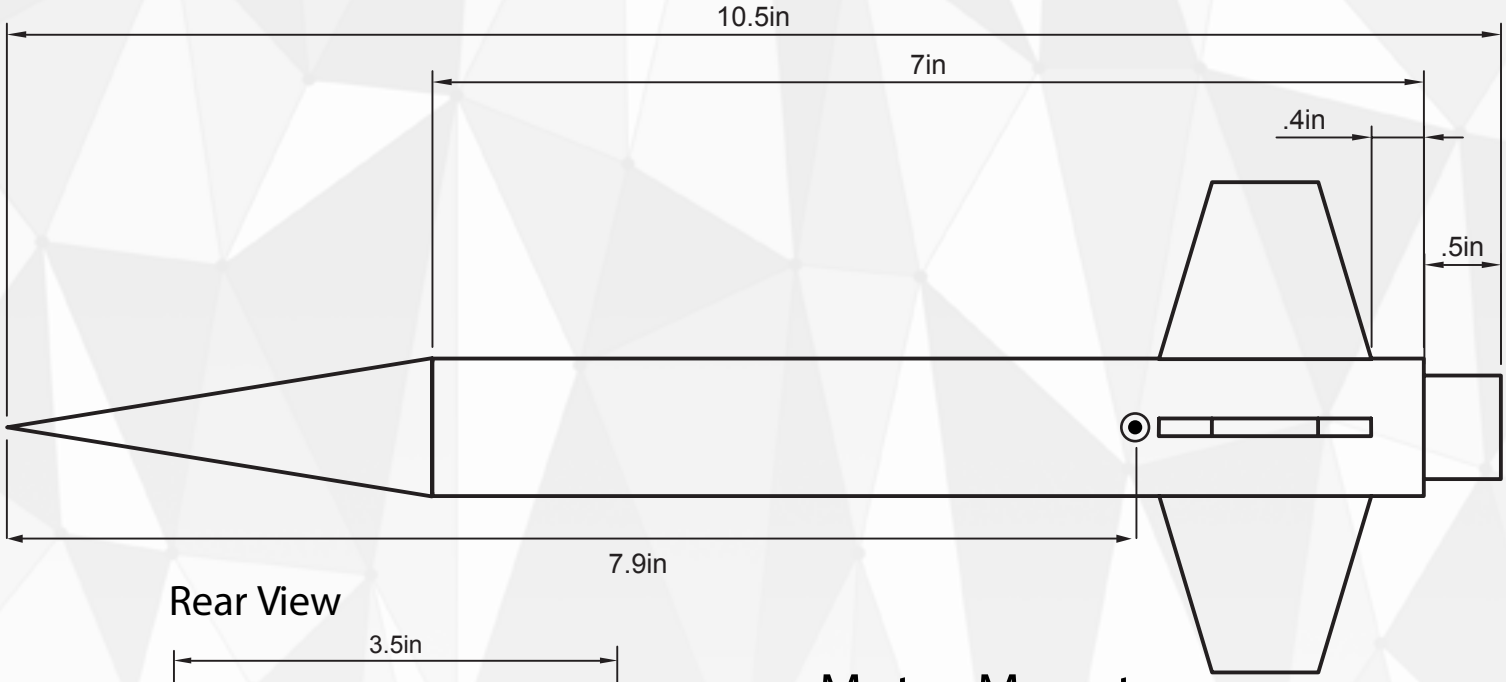

Rear View

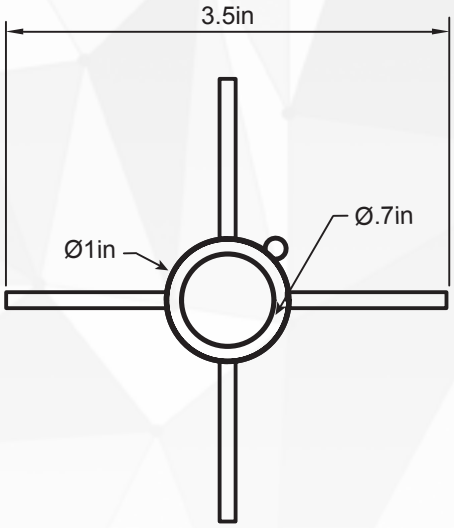
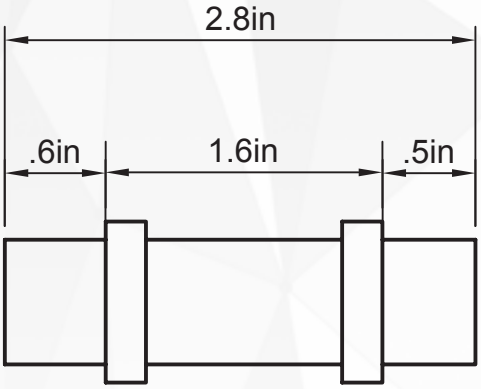
Motor Mount