PEAK OF FLIGHT NEWSLETTER

ISSUE 555 / AUGUST 31ST 2021

IN THIS ISSUE

MODEL ROCKET REPLACEABLE FIN SYSTEM

https://www.apogeerockets.com/Model-Rocket-Kits/Skill-Level-5-Model-Rocket-Kits/Long-March-CZ-1

www.ApogeeRockets.com
4960 Northpark Dr, Colorado Springs CO 80918
Ph# 719-535-9335

APOGEE COMPONENTS

PEAK OF FLIGHT

Model Rocket Replaceable Fin System

By Samer Najia

Just about every time I go to a launch, I come back with rockets with damaged, scuffed or cracked fins. Most of the time the effect on the airframe is cosmetic, but sometimes, it means I have a mostly flyable rocket with a single bad fin that would require significant work, not to mention a ruined paint job, to fix the damage. This damage results from a hard landing, perhaps hitting rocks or some other hard surface at a particular angle, a botched recovery from a rocket-eating tree or just mishandling on the way to or from the launch site (I have had to scrub a particular rocket's flight many times owing to fins breaking in the back of the car, or in the rush of kids and other participants taking their rockets out of the car and to the launch area).

This has led to a few experiments, one of which was in Newsletter 444 (https://www.apogeerockets.com/education/downloads/Newsletter444.pdf) - a replaceable, rear-ejecting fin can system. However, I am proposing a different approach now with a fully replaceable fin system that accommodates mid-sized and larger body tubes, supports higher power rockets (i.e. through-the-tube supports) and can be customized to have multiple fin arrays (rear, mid, front) and lengths.

Looking at fin installations with unslotted body tubes, I have experimented with slots for fins that are "positively lock" in place but can slide out without any additional fasteners but have found those "sloppy" in that they are open to vibration and can separate from the body tube due to wear and tear. Instead I am offering a solution here that allows for fins to be bolted onto a rocket, replaced in the field and accommodate any fin with suitable root lengths. These fins can be pre-prepared at the workshop, or with sheet material and simple tools, even field-cut as needed with a small hobby hacksaw. Because holes have to be made, a small battery powered drill would come in handy.

The example I am using for this article is based on 3mm thick fins, preferably of plywood or fiberglass. However, if all you have is balsa, it is simple enough to build up fins to 3mm (⅛") by laminating thinner sheet balsa together (just remember to criss-cross the grain of the wood for strength). For this article, I am using birch plywood fins I recovered from a failed model.

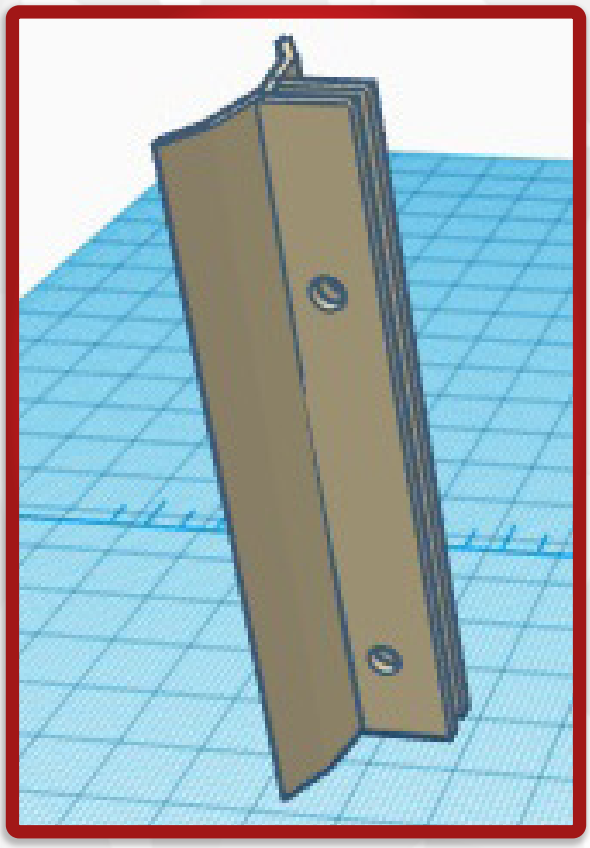

FIGURE 1: 3D VIEW OF FIN RAIL

Essentially, this concept mounts a fin rail (3, 4 or however many suit your purposes), with varying lengths that accommodate fins but also support adding another piece of material that extends the fin mount to secure it to the engine mount for higher power rockets.

NEED A PARACHUTE? APOGEE HAS THE ONE YOU'RE LOOKING FOR!

www.ApogeeRockets.com/Building-Supplies/Parachutes

Continued on page 3

About this Newsletter

You can subscribe to receive this e-zine FREE at the Apogee Components website www.ApogeeComponents.com, or by clicking the link here Newsletter Sign-Up

Newsletter Staff

Writer: Samer Najia
Cover & Layout: Derek Villar
Proofreader: Michelle Mason

Model Rocket Replaceable Fin System

Continued from page 2

The fabrication of this rail is simple enough. I have designed my rail for BT-60 and BT-80 tubes, but they can be made to conform to any tube contour -- in other words they are not interchangeable between tube sizes. As I have a 3D printer available, I printed mine. Because I happen to be able to do this, mine are 3D printed (file available on Thingiverse at https://www.thingiverse.com/thing:4923781), which makes it possible to make several of these at once. I prefer to use ABS (Acrylonitrile Butadiene Styrene) or PETG (Polyethylene Terephthalate Glycol) instead of PLA (Polylactic Acid) only because PLA has a tendency to deform when it's really hot outside. There are other formulations and techniques that can make PLA resistant to exposure to the sun (such as paints, resin layers for hardening), but those could add weight. You are encouraged to experiment by making these and treating them in any way you want. If you do not have access to a 3D printer, you can have them printed for you at a local Makerspace or through various services. You can also fabricate these by hand but would require a bit more effort to put together using a styrene sheet or plywood. To keep things concise, my focus here will be on 3D printed examples of this system.

I have included a number of features for the fin rail. These are:

a) The ability to accept a means to secure it to the engine mount through a slotted tube

b) M3 sized mount holes to allow for easy removal and installation of fins using standard screws, locknuts, thermoplastic inserts (instead of nuts), or removable plastic rivets (saves weight)

c) The design is extendible to handle longer root chord fins, more mounting holes and to have several of these in tandem to support longer fins. These can also be used for fins located further forward on the body tube

d) Making the fins installable make it easier to work, paint and detail a rocket with the fins removed

e) Fins can be installed at slight angles to the direction of flight if that is built into the fin structure itself, but still have the fin mount the same way as any other fin. Canted fins allow a rocket to spin in flight

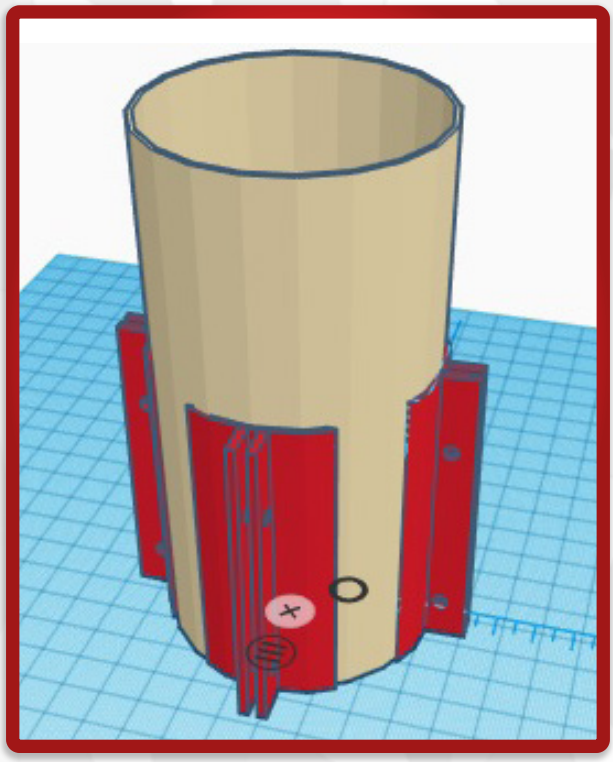

FIGURE 2: FIN RAILS MOUNTED ON BT-80 TUBE

Continued on page 4

Model Rocket Replaceable Fin System

Continued from page 3

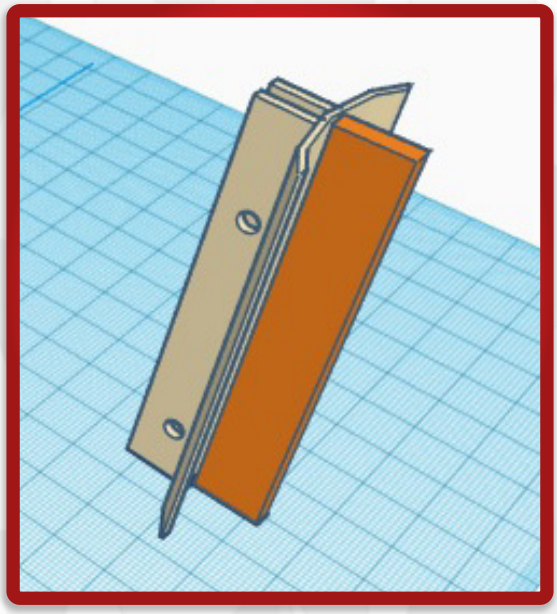

FIGURE 3: FIN ROOT ATTACHMENT TO ENGINE TUBE

A simple variation based on body tube and diameter of engine mount determines the nature of the attachment to the engine mount through a slot in the body tube. The fin rail can be fabricated this way to support higher power rockets and rocket motors and add strength to the overall structure. The attachment point to the engine mount should not be made of plastic due to the high temperatures passed through the engine mount which could cause any plastic attachment to deform. Therefore the attachment through a slot in the body tube should be made of material resistant to heat, like plywood, epoxied to the fin rail and to the engine mount. The image below depicts the fin rail with the epoxied fin "root" set for a 38mm engine mount inside a BT-80 tube.

FIGURE 3A: PRINTED RAIL WITH CUT DOWN EXTENSION FOR SMALLER ENGINE MOUNT

It is possible to have multiple permutations for a specific body tube/engine mount combination. Combining multiple rails, with and without the root attachment also allows for variability in the fin lengths and shapes. For example, we can use 2 rails per fin, one with a root section securing the motor mount to the body tube and another that is glued directly to the body tube. The larger surface area in contact with the body tube also creates better adhesion with glue.

Continued on page 5

Model Rocket Replaceable Fin System

Continued from page 4

When selecting body tubes for your "multi-rocket" consider purchasing pre-slotted ones. Whether you purchase paper tubes or composites, the slots save you time and give you a rudimentary alignment jig for your fins. If you do decide to cut out your own slots simply make them appropriate for the root of your fins and attach the support to the rail.

FIGURE 4: RAIL MOUNTED IN SLOTTED BT-60 TUBE

Install your fins first by lining them up in the rail and then mark your holes with a pen. If you have fins that you want to install forward and back (e.g. fins that are swept forward one way or backward the other), you can use the same holes if they are centered on the fin. Secure the fins with plastic rivets or M3 screws and nuts. At a minimum you should have 2 screws or rivets. A variation of the fin rail can have the nuts in nut traps or you can use brass thermoplastic inserts (although you would need slim ones). If you use metal fasteners be aware that these add weight and you will have to compensate with more power, nose weight, longer body tubes or all three. If you choose to instead let the screws tap the holes keep in mind that the holes will wear over time and you will eventually need nuts. I favor supergluing the nuts so that you don't lose them in the field (nuts can still fall out of nut traps and brass inserts are thicker and heavier). Note that you will have to add a little step to get overhanging parts of the fin to be flush with the body tube. The way around that, of course, is to not have overhangs. You can also add strakes here to round out the fin, but those would have to be permanently mounted. If you want a sweep in the fin within the confines of the mount, add that sweep into the mount's structure by cutting off the edge of the mount at the desired angle.

FIGURE 5: FIN MOUNTED TO THE RAIL AND ON THE BODY. HOLES CAN NOW BE DRILLED AND SCREWS INSERTED

Continued on page 6

Model Rocket Replaceable Fin System

Continued from page 5

Because wood wears, you can also make the holes in your fins oversized and insert plastic spacers in the holes. Those will add strength to the mount points and increase the lifespan of your fins.

The best part of 3D printed rails is that they can be scaled up and down as needed. Another benefit is that you can create any of a variety of booster sections for your payload bays and create multiple rockets out of one. Want exotic fins, or winglets, or different profiles without building a whole new rocket every time? Of course you do, and now you have as many rockets as you want.

Need Rail Buttons And Stand-Offs?

www.apogeerockets.com/Building_Supplies/Launch_Lugs_Rail_Buttons/Rail_Buttons

Model Rocket Design Software for Mac & Windows

www.ApogeeRockets.com/RockSim/RockSim_Information

Minimum Diameter Motor Retainers!

Apogee is your one stop shop for your minimum diameter rocket projects!

- Fly High
- Fly Fast
- Impress Your Friends!

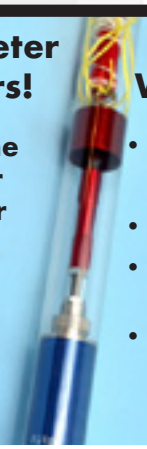

We Have:

- Minimum Diameter Retainers
- Motor Extenders
- Threaded Forward Closures
- Adapters for Cesaroni Cases

www.ApogeeRockets.com/Building_Supplies/Motor_Retainers_Hooks

Check out our Facebook page
www.facebook.com/ApogeeRockets

Star Lift Mega Lander

Build It - Launch It - Stick The Landing

The Excitement Builds All The Way To Touchdown

- Large Size Rocket Flies on the Impressive Mid-Power Motors.
- Articulating Lander Legs Fold Up During Launch.
- Laser Cut Plywood Parts for a Strong Rocket.
- Pre-Slotted Tube Makes Construction Easier.
- Vinyl Decal for Visual Appeal.

www.ApogeeRockets.com/Rocket_Kits/Skill_Level_5_Kits/Star_Lift_Mega_Lander