PEAK OF FLIGHT NEWSLETTER

ISSUE 577 / JULY 5TH 2022

IN THIS ISSUE

HANDLING DELICATE SPREAD-TOW CARBON FIBER

https://www.apogeerockets.com/Peak-of-Flight-Rocket-Plans

www.ApogeeRockets.com
4960 Northpark Dr, Colorado Springs CO 80918
Ph# 719-535-9335

APOGEE COMPONENTS

PEAK OF FLIGHT

Techniques of Using Spread-Tow Carbon Fiber

By Tim Van Milligan

Picking up spread-tow carbon fiber is very tricky. It is so lightweight and so fine, it wants to seemingly float in the air, twist up and tangle. Once it is tangled, you lose a lot of the strength benefit of the material because the orientation of the fiber isn't straight.

In this article, I'll show you my new technique of handling it, so that it doesn't tangle up and so you'll be less frustrated by the process. And you'll end up with a nicer part that is stronger and lighter weight.

Background

Over the past couple of years, I've grown in my appreciation for the benefits of using carbon fiber tow in rocketry. As a reinforcement material applied over the surface of your rocket, it adds a significant improvement in strength, but at a very modest increase in mass. If you need to strengthen a part on your rocket, then this is my go-to material. Its advantage over woven fiberglass cloth is that it is significantly lighter in weight and a lot stronger. And other than its propensity for tangling, it is easier to work, especially when it comes to cutting it.

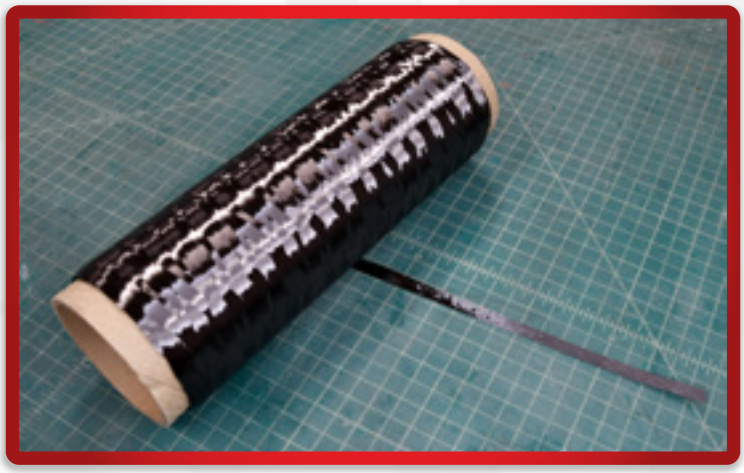

FIGURE 1: A SPOOL OF CARBON-FIBER TOW. THE RIBBON CONTAINS 12,000 INDIVIDUAL FIBER FILAMENTS. EACH IS 1/10 THE DIAMETER OF A HUMAN HAIR.

This article is somewhat of a continuation of my first article in *Peak-of-Flight* Newsletter #478 (https://www.apogeerockets.com/education/downloads/Newsletter478.pdf) that I wrote in 2018. In that article, I showed you the process of spreading the carbon fiber tow so that you could use less of the material for a significant reduction in weight of the part you're reinforcing. Some examples where I've used it were strengthening helicopter blades, glider wings, fins, and I've even used it to make ultra-lightweight tubes.

My objective seems to be reducing the weight of a rocket down to its absolute minimum. The reason for this is that I do a lot of competition models, where weight is the enemy. Any excess weight means the rocket won't fly as high with a given size rocket motor, and they fall out of the sky faster too. I have to admit that I'm zealous about this, while most rocketeers aren't. 99.9% of the rocketeers that I meet are more concerned with building a bullet-proof rocket that is stronger than a tank, so it can survive any type of crash. Performance, in that case, is not too much of a concern -- durability is. These people want their rockets to last forever. While that is a worthy objective, this article is probably geared for the person that wants increased performance over durability. But, the same techniques could be applied to making your rocket more durable. I just try to reduce weight to a minimum.

What I've Learned Since 2018…

What I found out from working with it is that Carbon Fiber tow is so strong you don't need a lot of it. Since 2018, I'm trying to use even less of it in my rockets. Why? Because I've been over-building my competition rockets. They were too heavy, and that meant I'm losing performance.

I use carbon fiber tow instead of a cloth because the tow's strength is "directional," where typically carbon fiber cloth has uniform strength in any direction you apply it. While that sounds good, when you're strengthening a part by applying it to the surface, you don't need it strong in all directions. Typically, you only need it strong in one

Continued on page 3

About this Newsletter
You can subscribe to receive this e-zine FREE at the Apogee Components website www.ApogeeComponents.com, or by clicking the link here Newsletter Sign-Up

Newsletter Staff
Writer: Tim Van Milligan
Cover & Layout: Derek Villar
Proofreader: Michelle Mason

Techniques of Using Spread-Tow Carbon Fiber

Continued from page 2

direction. For example, a helicopter rotor blade only needs to resist bending along the long direction. So any additional fibers going side-to-side are actually just dead weight. If you can eliminate them from the part, you save weight. This is the advantage of tow - all the fibers run in one direction, so you get strength in only one direction.

What tow is, is really just a large bundle of fibers. The stuff I use is called 12K tow, which means that the ribbon contains 12,000 individual strands of fiber. I don't need that many. And what little I need, I want the bundles to be spread out wide, and have thinner thickness. This spreads the strength over a wider area, and makes the surface much smoother than having a lumpy bunch of fibers.

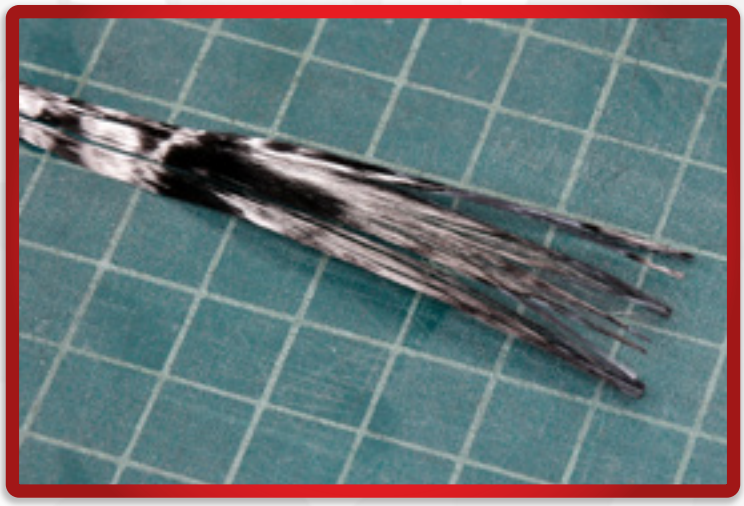

FIGURE 2: CLOSE UP OF THE RIBBON OF TOW. THERE ARE ABOUT 12,000 INDIVIDUAL FIBER FILAMENTS IN THIS PICTUR.

That is what Newsletter #478 was all about. It showed the process of taking the bundle of fibers and flattening them and spreading them out wide. This is called "spread tow."

What's changed since 2018 is that I'm using fewer fibers. I'll take the bundle of 12,000 fibers and split it using a hobby knife. You don't move the knife though. You just plunge it into the middle of the ribbon, sticking the tip into your cutting mat. Then just pull the ribbon so that the fibers naturally just separate as they flow past the knife.

FIGURE 3: SPLITTING THE LARGE BUNDLE OF FIBERS BY SLIDING IT PAST THE BLADE OF A HOBBY KNIFE.

Continued on page 4

Check out our Facebook page
www.facebook.com/ApogeeRockets

Techniques of Using Spread-Tow Carbon Fiber

Continued from page 3

In Figure 4, I've taken a bundle of 12,000 fibers, and split it into four ribbons, each with about 3,000 filaments.

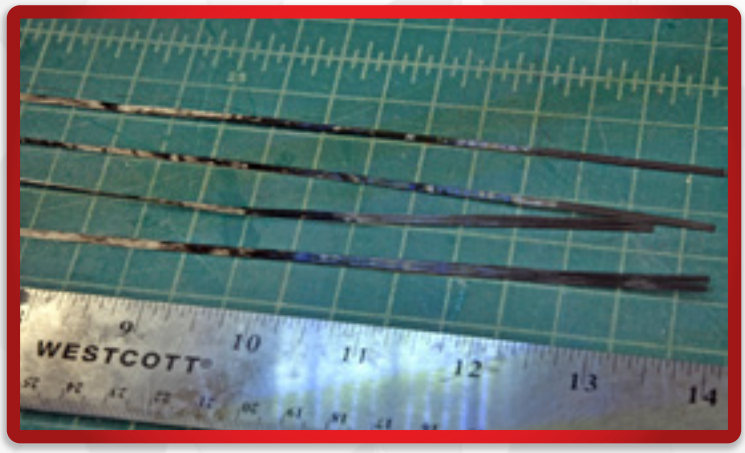

FIGURE 4: FOUR RIBBONS OF TOW, EACH WITH ABOUT 3,000 FILAMENTS IN IT.

At this point, I'll refer you back to Newsletter 478, where I show the technique of taking the ribbon and flattening it out and spreading the fibers over a wider area. For the example of laying them along the surface of a helicopter blade, I want the fibers to be spread out about 1-½ inches for this particular application.

The downside of using less fibers is that it tangles even more easily. Why? Because the individual filaments aren't bunched up, and are finer. It doesn't behave like a continuous ribbon of fabric - it is a loose collection of fibers that are more independent of each other. Instead of picking up one bundle, you're picking up individual fibers. It was much more difficult than I was used to based on previous experience.

I had to come up with a way of handling it, other than just using my hands to pick it up. If you touch it, the spread tow quickly flips over and tangles.

My solution was to leave it on the plastic sheet, and not touch it with my hands. There is a bit of static electricity or low surface tension that the plastic sheet has after the alcohol evaporates out. The fibers will stay attached to the plastic as long as you are gentle with the plastic. You can even turn the plastic over, so the fibers are on the underside of the sheet, and the fibers will still stick to it.

The next question is how to transfer the fibers to the part without touching them. The part (like a balsa wood helicopter blade) doesn't have any static electricity that would attract the fibers, you simply can't lay the balsa into the fibers.

Continued on page 5

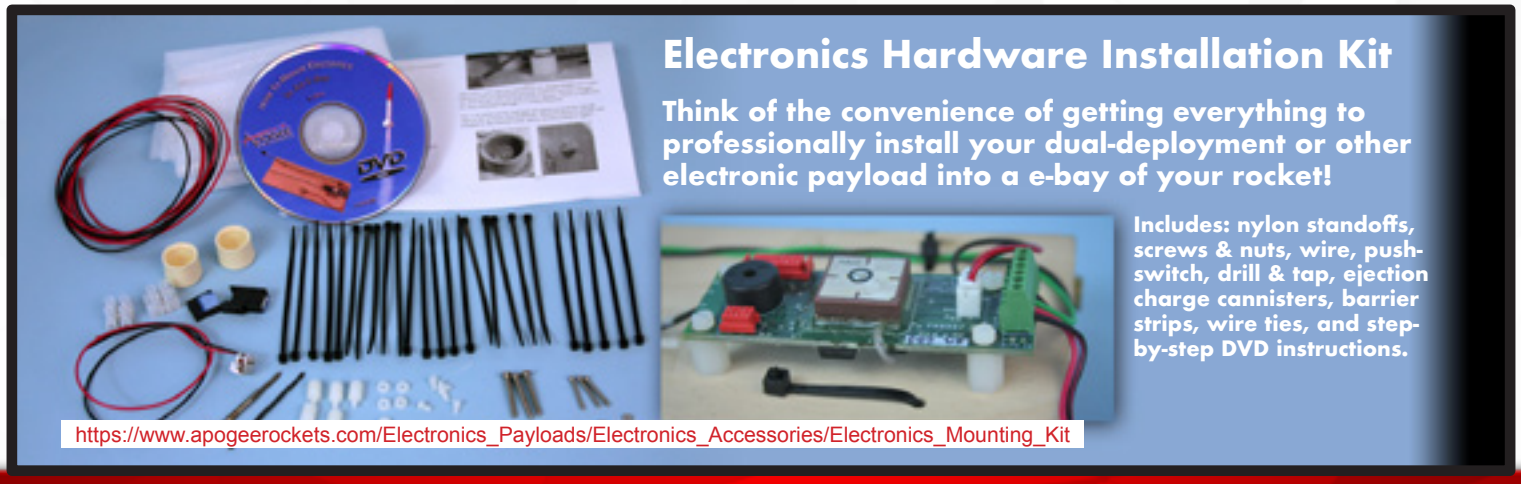

Techniques of Using Spread-Tow Carbon Fiber

Continued from page 4

The solution to this transference issue is a can of “low tack spray adhesive” as shown in Figure 5.

FIGURE 5: A WISPY MIST OF SPRAY ADHESIVE ON THE WOOD WILL GIVE IT JUST ENOUGH STICKINESS TO BE ABLE TO TRANSFER THE FIBERS FROM THE PLASTIC TO THE WOOD.

What I do is put a very fine mist of spray adhesive onto the surface of the wood. I mean -- really really light. I hold the can of adhesive at least a foot away from the part so that hardly any seems to get on the surface.

In Figure 5, the parts are orange because I sprayed them with fluorescent paint before applying the spray adhesive. I did this to give the blades some color and to make them a little more moisture resistant. The blades are so thin that they can warp if they land in wet grass. So the paint helps for that problem, and the color helps me find the rocket if it lands in brown grass (like we have in Colorado).

Once the adhesive is on the surface, you can pick up the part and hover it over the fibers and then just drop it onto the plastic. This is shown in Figure 6.

FIGURE 6: HOVER THE SLIGHTLY STICKY PART OVER THE SPREAD TOW. YOU ONLY GET ONE CHANCE TO POSITION IT.

I should point out that you only get one chance to position the part over the spread tow. Once it touches the fibers, they’ll become instantly adhered to the wood, and free from the plastic sheet. If they are in the wrong position, you’ve got more work to do. The fibers would have to be peeled off (which is easy to do), but they’ll be so tangled

Continued on page 6

Techniques of Using Spread-Tow Carbon Fiber

Continued from page 5

that you'll say a lot of bad cuss words. You basically have to start over and spread another ribbon of fibers so you can get the placement right.

You can also lay the slightly sticky part on the table, and flip the plastic sheet over and drape it over the part. Just be careful to work slowly so you don't create a small breeze with the plastic that could separate the fibers from the sheet. Once they start dangling free from the plastic, they'll quickly twist up and tangle.

If I was using a sheet of plastic like shown in figure 6 that had multiple spread ribbons on it, I'd cut the plastic so that each bundle of spread tow was separated from each other. That way I wouldn't mess up three ribbons of spread tow by rough handling of one.

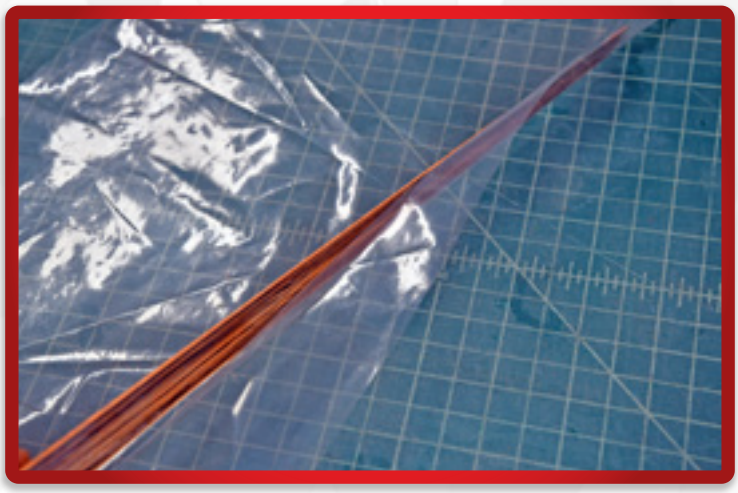

FIGURE 7: PEELING THE PLASTIC SHEET AWAY FROM THE PART.

Once the plastic is on the part, I flip it over so the plastic is on top, and then press the fibers firmly against the surface of the wood. I really want to get them to stick down. Then the plastic can be peeled off as shown in Figure 7.

If there are any loose fibers that are part-way on and part-way off the wood, I simply just grab the dangling fiber and position it on the wood and press it down into the adhesive.

Notice that there are some fibers that extend past the end of the blade. These will have to be trimmed off. But before you do that, you'll have to permanently adhere the

FIGURE 8: THE SPREAD TOW FIBERS HAVE BEEN TRANSFERRED TO THE SURFACE OF THE PART. NOTICE HOW NICE AND STRAIGHT THEY ARE. YOU WILL ALSO APPLY THEM TO THE OTHER SIDE TOO.

Continued on page 7

Techniques of Using Spread-Tow Carbon Fiber

Continued from page 6

fibers to the surface. The sticky spray adhesive is only a temporary solution to get them onto the surface of the part. For permanent attachment, you'll have to apply a thin coat of liquid epoxy.

Since the fibers aren't moving at this point, applying the epoxy is easy. In fact, you can be really rough with the process of applying the epoxy as the fibers aren't going to move around.

If the coat of spray adhesive was very light, you don't have to worry about it affecting the strength of the finished part. The epoxy will get down to the wood and bond the fibers to the wood without any worry.

Once the epoxy has cured, you can clean up the edges, and any strands of fiber that overhang the edges of the part. They are much easier to cut and sand once they have epoxy on them. The strands bundle together and become really stiff.

NEED A PARACHUTE? APOGEE HAS THE ONE YOU'RE LOOKING FOR!

www.ApogeeRockets.com/Building-Supplies/Parachutes

Join Tripoli.org
Mention Apogee Components

Conclusion

This technique of handling the spread tow fibers can be used any time you're using spread tow. In fact, I've used this same technique to temporarily position fabrics as well (such as woven fiberglass cloth and carbon fiber cloth). Spray it lightly with spray adhesive, and then press the cloth down into the stickiness. It will keep it in place, so that you can apply the epoxy to permanently attach it.

About The Author:

Tim Van Milligan (a.k.a. "Mr. Rocket") is a real rocket scientist who likes helping out other rocketeers. He is an avid rocketry competitor and is Level 3 high power certified. He is often asked what is the biggest rocket he's ever launched. His answer is that before he started writing articles and books about rocketry, he worked on the Delta II rocket that launched satellites into orbit. He has a B.S. in Aeronautical Engineering from Embry-Riddle Aeronautical University in Daytona Beach, Florida, and has worked toward an M.S. in Space Technology from the Florida Institute of Technology in Melbourne, Florida. Currently, he is the owner of Apogee Components (http://www.apogeerockets.com) and also the author of the books: *Model Rocket Design and Construction*, *69 Simple Science Fair Projects with Model Rockets: Aeronautics* and publisher of the "*Peak-of-Flight*" newsletter, a FREE ezine newsletter about model rockets. You can email him by using the contact form at https://www.apogeerockets.com/Contact.

Star Racer Rocket Plan

Download the ***RockSim*** design file for the Star Racer at:
https://www.apogeerockets.com/Peak-of-Flight-Rocket-Plans

Star Racer Parts List

10131 - (1) AT33/18 cardboard tube
20068 - (1) PNC-33
13017 - (1) AC-33
12258 - Coupler Bulkhead Disk 33
12028 - 18/33 Boattail motor mount kit
13052 - ⅛" Launch Lugs
14099 - ⅛"x3x18 Balsa wood sheet
29126 - 15" Plastic Parachute

Order parts at:
https://www.apogeerockets.com/Quick_Order

Recommend motors

Estes C5-3
Estes C6-3
Aerotech D20-4

Star Racer *By Samuel Pullen*

About the Design

Have you ever wanted to race to the stars? That was the goal with this rocket. While designing it I kept in mind a sleek and simple shape. It is built to fly on the Estes C5-3 motor but is designed to handle anything you're willing to throw at it. With its 18mm motor mount it offers up a lot of motor choices and lots of variety in flight performance. This rocket is designed around 33mm tubing also known as BT-55, which gives it a nice size perfect for cutting through the air. In addition to the tubing the rocket also has a drag reducing boattail on the bottom to help it get even higher into the air due to a lower base drag than a typical model of its size. If you are planning on racing to the stars, this rocket also boasts a nine inch long payload bay at the top perfect for lofting scientific payloads.

Star racer
Length: 23.5500 In. , Diameter: 1.3299 In. , Span diameter: 5.8299 In.
Mass 106.970 g , Selected stage mass 106.970 g
CG: 12.2903 In., CP: 18.7956 In., Margin: 4.91 Overstable
Shown without engines.

Notes

A recovery device is not listed. I recommend either an 18" parachute or a 15" parachute.

Continued on page 9

Star Racer Rocket Plan

Continued from page 8

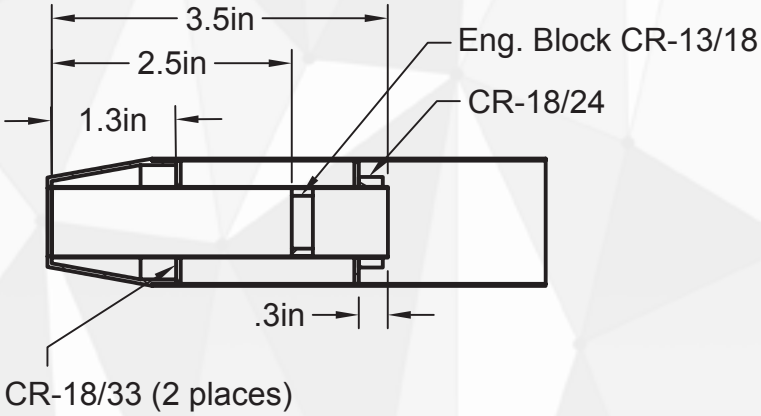

SECTION A-A
SCALE 1:2

1 INCH

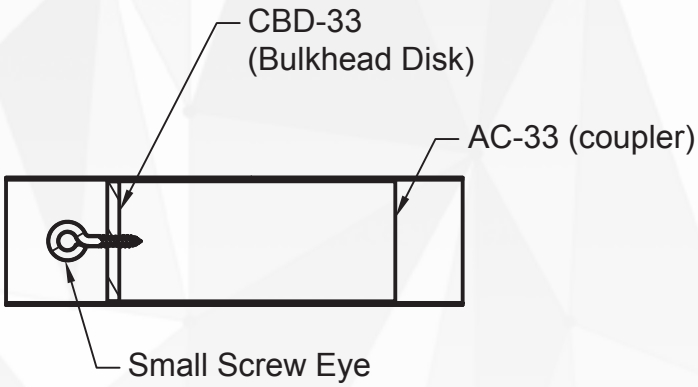

SECTION B-B
SCALE 1:2

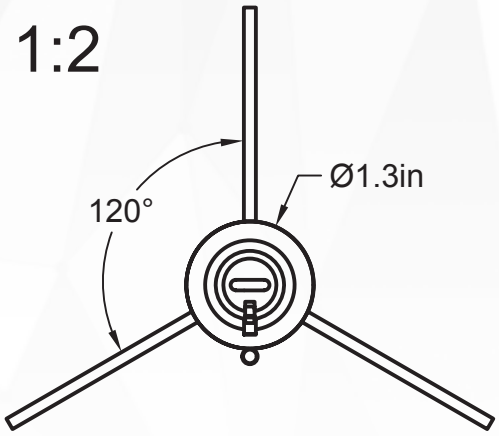

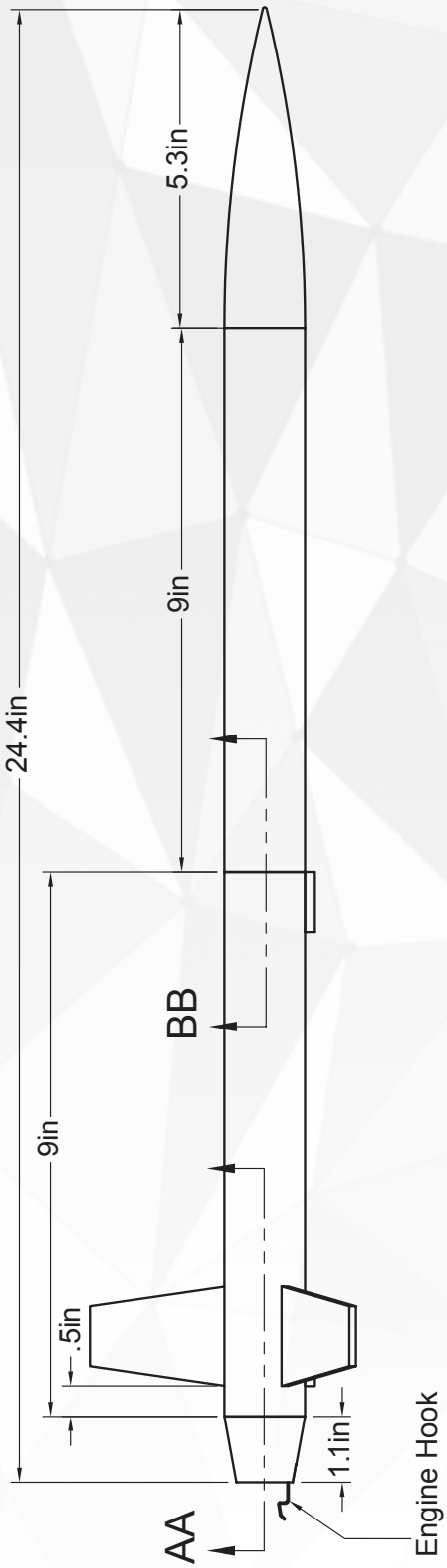

2D Drawings

Note that the launch lugs and engine mount have been omitted for clarity on the scale drawings. The launch lugs are placed with one launch lug at the aft and one just aft of where the rocket splits. The coupler is glued halfway into the 9 inch front section and the motor mount is made per its instructions.

Continued on page 10

Star Racer Rocket Plan

Continued from page 9

Full-Size Fin Template

Full size fin pattern make 3. The wood should be 3” wide and 7.00 inches long to get all the fins on it, note the grain direction will be perpendicular to the body tube.

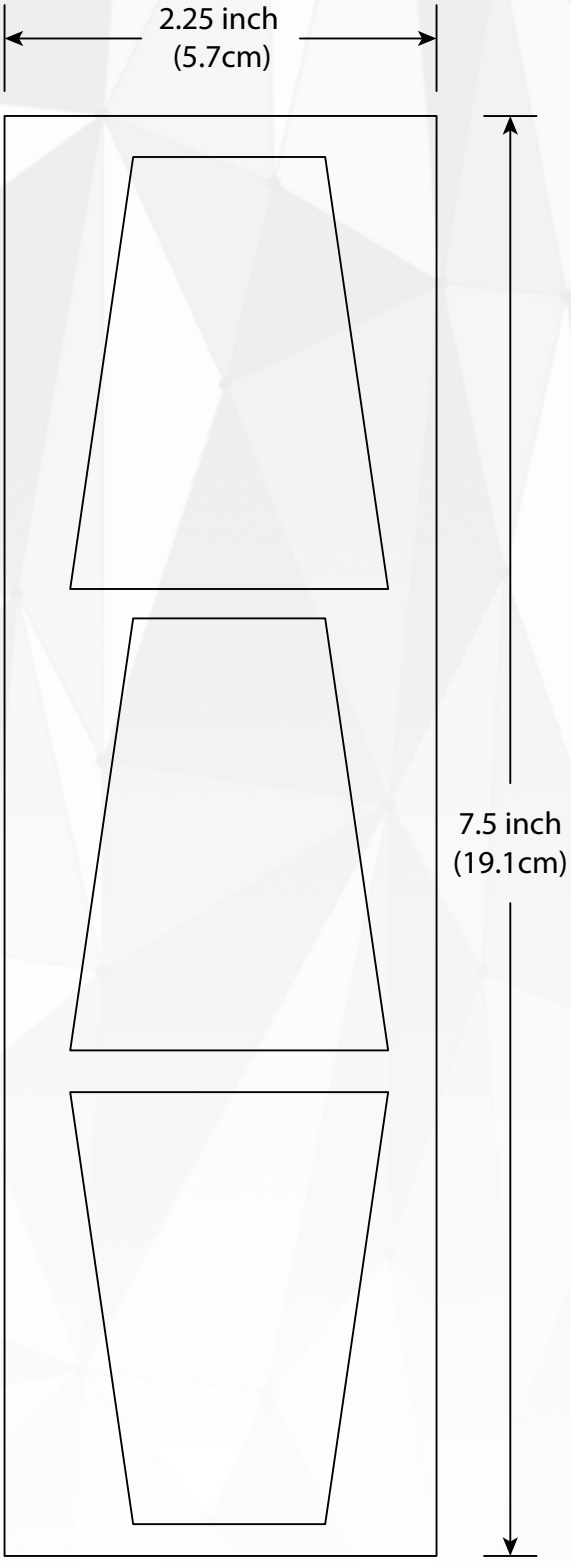

Decals

The decal for the rocket is gold; it can be printed on waterslide paper for an inkjet printer. On the version I did, the letter was cut on a Silhouette Cameo 4 pro cutter.