PEAK OF FLIGHT NEWSLETTER

ISSUE 580 / AUGUST 16TH 2022

IN THIS ISSUE

MAXIMUM "SPILL HOLE" SIZE IN LOW POWER ROCKET PARACHUTES

https://www.apogeerockets.com/Peak-of-Flight-Rocket-Plans

www.ApogeeRockets.com
4960 Northpark Dr, Colorado Springs CO 80918
Ph# 719-535-9335

APOGEE COMPONENTS

PEAK OF FLIGHT

Maximum "Spill Hole" Size in Low Power Rocket Parachutes

By Dave Flanagan

Introduction

Spill holes (technically "apex vents") are often seen in LPR kit parachutes. Apex vents are usually used to increase the rate of descent to minimize drifting. I have seen many LPR kit chutes with what I consider to be huge apex vents. Sometimes I have been surprised that the parachute even opened. However, no one seems to know how large an apex vent can be before an LPR parachute does fail. I guess I don't know why we would need to know this - we can always switch to a smaller chute rather than risk making an apex vent too large. But I was curious so I decided to perform a very informal "quick and dirty" test.

The basic approach was to cut increasingly larger apex vents into a parachute canopy and "toss test" it after every increase in size until it failed. Toss testing is an easy way to check out a small parachute before you trust it to bring back your rocket. It is like a string test (a.k.a. swing test) for stability, but for your parachute.

Testing

Test #1

I cut out the canopy from an 18" LPR parachute kit (Apogee P/N 29126: https://www.apogeerockets.com/Building_Supplies/Parachutes_Recovery_Equipment/Parachutes/Low_Power/12in_15in_18in_Cut-to-Size_Plastic_Parachute) and taped it flat onto a table under slight tension. I modified a compass to hold a marker and used it to draw concentric circles on the canopy. The smallest circle defined an initial apex vent with an area of 2.5% of the total parachute area. Each larger circle represented an additional 2.5% of canopy area. The largest circle encompassed 20% of the area of the original parachute. (The formulas used to figure the size of the circles are at the end of this article.) I thought for sure the parachute would fail to open before 20% of the area was removed. See Figure 1.

FIGURE 1: CONCENTRIC CIRCLES WERE DRAWN OF THE CANOPY USING A COMPASS MODIFIED TO HOLD A MARKER.

After cutting out the initial apex vent I assembled the parachute. I used cotton twine 1.5 mm in diameter to create the suspension lines which I taped to the line attachment points on the canopy. Suspension line length was one canopy diameter (18") which is typical of LPR kit parachutes. A bridle of about 8 inches connected the suspension lines to the simulated payload – a two ounce lead fishing weight.

I repeatedly "toss tested" the parachute to determine its opening characteristics. After each series of toss tests (three to eight tests depending on results) I used a hobby knife to increase the area of the apex vent to the next larger size.

The parachute did not fail even with the largest vent in place (eight tests). See Figure 2. I found this very surprising.

Continued on page 3

About this Newsletter

You can subscribe to receive this e-zine FREE at the Apogee Components website www.ApogeeComponents.com, or by clicking the link here Newsletter Sign-Up

Newsletter Staff

Writer: Dave Flanagan
Cover & Layout: Derek Villar
Proofreader: Michelle Mason

Maximum "Spill Hole" Size in Low Power Rocket Parachutes

Continued from page 2

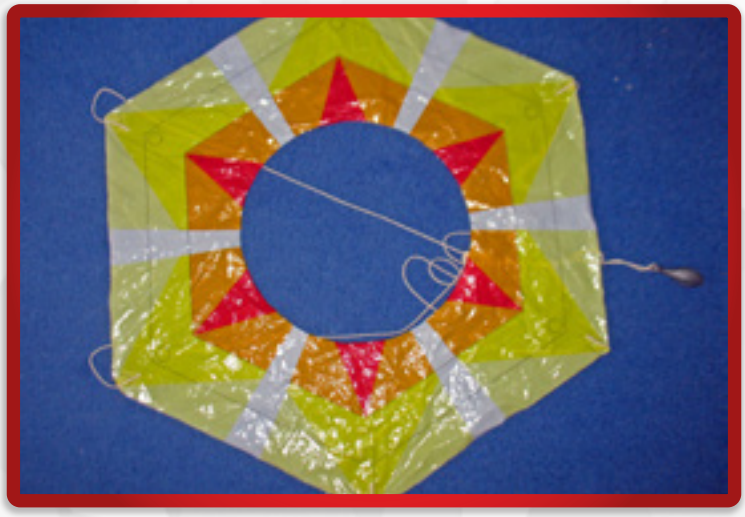

FIGURE 2: PARACHUTE #1 WITH 20% OF THE TOTAL AREA REMOVED IS SHOWN.

Test #2

The middle of the parachute (Parachute #1) was now missing so I could not accurately draw more circles on the canopy to continue the experiment. I started over. I assembled another identical parachute as described above except this time the initial apex vent size was 20% of the total canopy area. As before, each larger circle increased the area of the apex vent by 2.5% of the original area. The largest circle encompassed 40% of the original canopy area. I repeated the toss tests.

The parachute (Parachute #2) opened normally until 27.5% of the canopy area was removed at which point openings became irregular and unpredictable. However there were still no failures. The first failure occurred (one of five tests) with 30% of the area removed. The same result was obtained with 32.5% of the area removed. The openings became even more irregular at this point. No failures occurred with 35% of the area removed (five tests). Three out of eight tests failed when 37.5% of the area was removed. Four of five trials failed when 40% of the area was removed. The parachute absolutely refused to function reliably at this point. Figure #3 shows the parachute with 40% of the area removed.

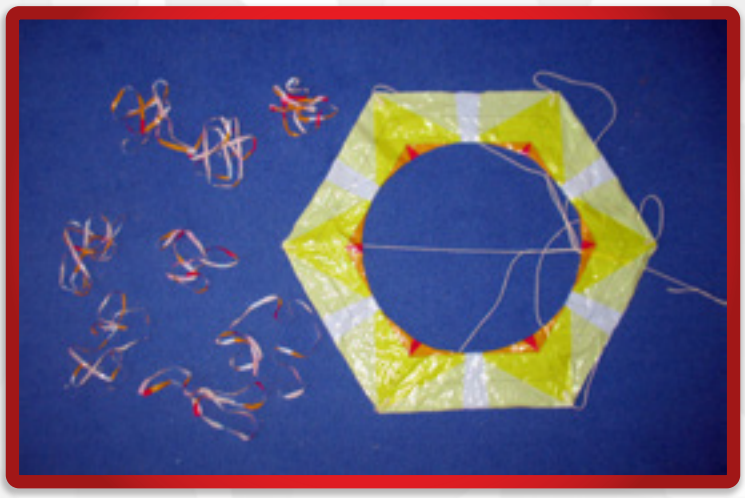

FIGURE 3: PARACHUTE #2 SHOWING 40% OF THE TOTAL ORIGINAL CANOPY AREA REMOVED TO CREATE A LARGE APEX VENT. WHAT APPEARS TO BE CONFETTI AT THE LEFT ARE THE EIGHT "RINGS" OF CANOPY MATERIAL THAT WERE REMOVED IN SEQUENCE TO INCREASE THE APEX VENT AREA FROM 20% TO 40% OF THE TOTAL ORIGINAL PARACHUTE AREA DURING TESTING.

Continued on page 4

Maximum "Spill Hole" Size in Low Power Rocket Parachutes

Continued from page 3

The above tests were performed on a hexagonal parachute (a regular polygon of six sides). I thought that an octagonal (eight sided) LPR kit chute would give roughly the same results, but I was wrong about the hexagonal chute, so I tested an octagonal one anyway.

Test #3

I used larger parachute for this test (Apogee P/N 29101: https://www.apogeerockets.com/Building-Supplies/Parachutes/Up-to-24in/24in-32in-Cut-to-Size-Plastic-Parachute). This kit can be built as a 24" or 32" parachute. I chose the 24" option and built the parachute as described above. However I sized the initial apex vent at 25% of the total parachute area, and drew concentric rings on the canopy to allow additional 2.5% segments of canopy area to be sequentially removed. The area of the largest ring encompassed 45% of the original canopy area. I used a four ounce lead fishing weight for toss testing instead of the two ounce weight used with the smaller chutes. See Figure 4.

FIGURE 4: PARACHUTE #3 IS SHOWN AT THE BEGINNING OF TESTING. TWENTY FIVE PERCENT OF THE TOTAL AREA OF THIS OCTAGONAL PARACHUTE WAS REMOVED TO CREATE THE INITIAL APEX VENT.

I performed toss testing as described above. When 32.5% of the area was removed to create the apex vent the openings began to get irregular. The first failure (one of six tests) occurred with 35% of the area removed, and four of six tests failed when the 37.5% of the parachute area was removed. The parachute opened only one of six times when 40% of the area had been removed. Since it failed to function reliably at this point I stopped the test.

Observations

I saw two failure modes. At times one or more gores would open "inverted", that is, instead of inflating outward it inflated inward towards the center of the parachute. This tended to close rather than open the canopy. I think that with smaller apex vent sizes there was enough internal (stagnation) pressure to overcome this and force the gore back out. When the apex vents became too large it was not possible to build up sufficient internal pressure for this to happen, especially when more than one gore opened inverted. When this happened the parachute just wobbled all the way to the ground. The other type of failure occurred at the largest vent sizes. The suspension lines would deploy normally but the parachute canopy would instantly begin spinning before it could even start to inflate. This would wind up the lines until there was no possibility of recovery.

Continued on page 5

Maximum "Spill Hole" Size in Low Power Rocket Parachutes

Continued from page 4

As noted above the openings of the octagonal parachute did not become irregular until 32.5% of the area was removed as opposed to 27.5% for the hexagonal chute. Also, the octagonal parachute did not experience a failure until the apex vent encompassed 35% of the total parachute area as opposed to 30% for the hexagonal parachute.

Summary

This was a very crude test. Many variables were ignored. However the results suggest it is probably safe to create an apex vent with an area as large as 25% of the total parachute area in any plastic LPR parachute kit canopy. Also, such parachutes with more sides (and thus more suspension lines) might tolerate larger apex vents.

Extra for Experts

Cutting holes into a parachute canopy creates what aerospace engineers call "geometric porosity". It is defined as the ratio of the total area removed to the total original area of the parachute. Porosity in general is so important to parachute design it has been given its own symbol in parachute literature – the lower case Greek letter lambda (λ). The range of lambda is from zero to one. A parachute with 20% of the original area removed has a porosity of 0.20 (λ=0.20).

LPR kit chutes fall into a class of parachutes called "flat circulars". Increasing the geometric porosity of a flat circular parachute generally increases stability (less oscillation), decreases the drag coefficient, and often reduces the opening shock.

Model parachutes with apex vents even larger than the ones tested here can be built using a slightly different but still quite simple technique. Parachutes with really huge apex vents are often called "annular parachutes". You can build an annular parachute to recover your rocket quite easily - see *Peak of Flight* Issue #497: https://www.apogeerockets.com/education/downloads/Newsletter497.pdf. At least 50% of a parachute's area can be removed using the very simple method described in that issue.

If you want to design an apex vent, here are the formulas you will need. They are the ones I used to conduct this test. The area 'S' of any regular polygon of 'n' sides is

$$S = \left[n \tan\left(\frac{180}{n}\right)\right] r^2$$

where 'r' is the radius of the inscribed circle (the largest circle you can draw inside the polygon). Then once you have selected the degree of geometric porosity (λ) you would like, the radius of the apex vent 'rv' is

$$r_v = \sqrt{\left(\frac{\lambda S}{\pi}\right)}$$

Have fun!

Check out our Facebook page
www.facebook.com/ApogeeRockets

Continued on page 6

Maximum "Spill Hole" Size in Low Power Rocket Parachutes

Continued from page 5

About the Author

Dave is a registered professional engineer with over twenty years of aerospace experience at NASA's JSC and MSFC. He holds B.S. and M.S. degrees in engineering and a B.S. degree in science, and while at MSFC supported NASA's University Student Launch Initiative. He earned his airborne wings in the Army and holds an expert skydiver rating from the U.S. Parachute Association. Dave is an FAA master parachute rigger and has completed the AIAA Parachute Systems Technology Short Course. He is also a FAA licensed private pilot and an EAA certified ultralight pilot. Dave is retired and spends most of his time scuba diving and kayaking but does occasionally fly model rockets, usually ones recovered by really weird looking parachutes.

www.ApogeeRockets.com/RockSim/RockSim_Information

Minimum Diameter Motor Retainers!

Apogee is your one stop shop for your minimum diameter rocket projects!

- Fly High
- Fly Fast
- Impress Your Friends!

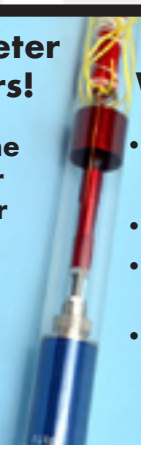

We Have:

- Minimum Diameter Retainers
- Motor Extenders
- Threaded Forward Closures
- Adapters for Cesaroni Cases

www.ApogeeRockets.com/Building_Supplies/Motor_Retainers_Hooks

Electronics Hardware Installation Kit

Think of the convenience of getting everything to professionally install your dual-deployment or other electronic payload into a e-bay of your rocket!

Includes: nylon standoffs, screws & nuts, wire, push-switch, drill & tap, ejection charge cannisters, barrier strips, wire ties, and step-by-step DVD instructions.

https://www.apogeerockets.com/Electronics_Payloads/Electronics_Accessories/Electronics_Mounting_Kit

Dolphin Rocket Plan

Download the ***RockSim*** design file for the Dolphin at:
https://www.apogeerockets.com/Peak-of-Flight-Rocket-Plans

Dolphin Parts List

10086 – 18mm (BT-20) cardboard tube
10131 – 33mm (BT-55) cardboard tube
13028 – (1) Centering ring 13mm to 18mm (engine block)
13032 – (1) Centering ring 18mm to 24mm
13396 – (2) Centering ring 18mm to 33mm plywood
14097 – 3/32”x3”x18” Balsa
14098 – 1/16”x3”x18” Balsa
18903 – Canopy for PNC-33A nose cone
20068 – (1) PNC-33 Nose cone
29091 – 15” parachute (or P/N 29090 12” parachute for small fields)
30325 – Kevlar Cord 100# (4 ft.)

Order parts at:
https://www.apogeerockets.com/Quick_Order

Recommend Motors

(Altitudes calculated at empty weight of 89g)

Estes A8-3 *(116’)*
Estes B6-2 *(286’)*
Estes C6-5 *(790’)*
Quest C12-4 *(845’)*
Quest D16-6 *(1101’)*
Aerotech D13W-7 *(1635’)*

Dolphin *By Martin Jay McKee*

About the Design

What happens when you’re tasked with designing a rocket and there’s a conspicuous yellow submarine (https://www.apogeerockets.com/education/downloads/Newsletter562.pdf) in the corner of your office? Well, you may very well start thinking about the sea, then sea life, and you might finally ask a question. “What would a dolphin look like as a rocket?” I asked that question; and the answer is this rocket. Tursiops rockatus or, perhaps, just the Dolphin. The rocket’s inspiration, the Bottlenose Dolphin (Tursiops truncatus), lives worldwide in temperate and tropical waters and consists of two subspecies (the Common and Indo-Pacific, T.aduncus). Among the most intelligent animals in the world, what makes the Bottlenose Dolphin most interesting from the standpoint of rocketry is their elegant, streamlined form; it’s rather like a rocket in fact. The Dolphin (T.rockatus!) has a unique asymmetric arrangement of fins and a long rolled transition that provide excellent practice of more advanced building skills, but it’s far from a difficult rocket to build and flights couldn’t be easier on A, B, and C class engines.

Continued on page 8

Dolphin Rocket Plan

Continued from page 7

Side View

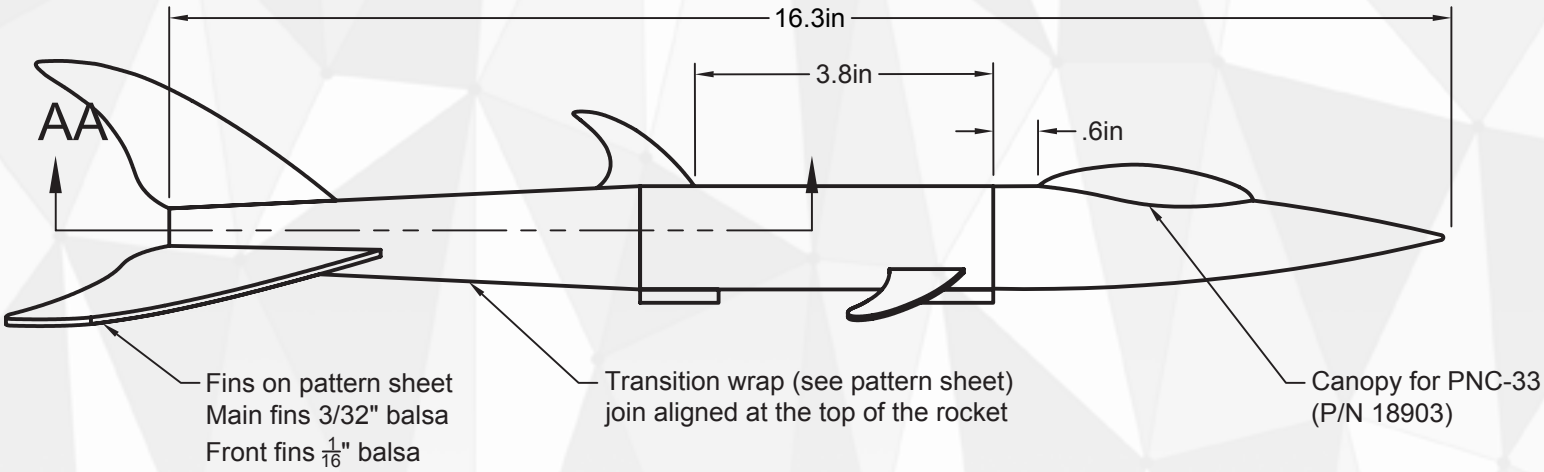

Bottom View

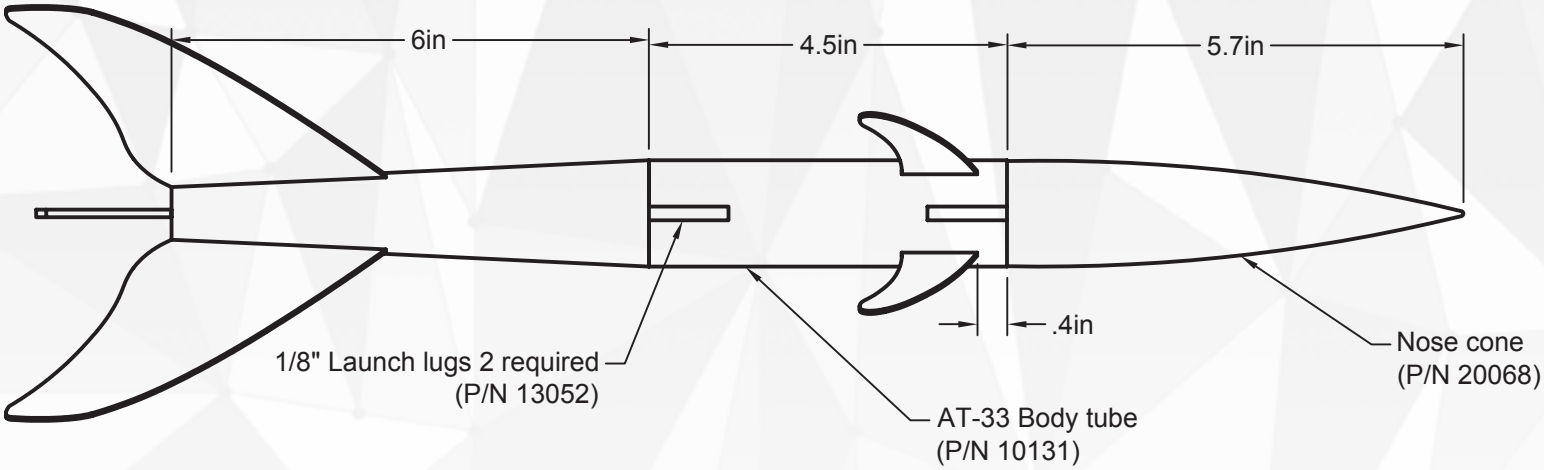

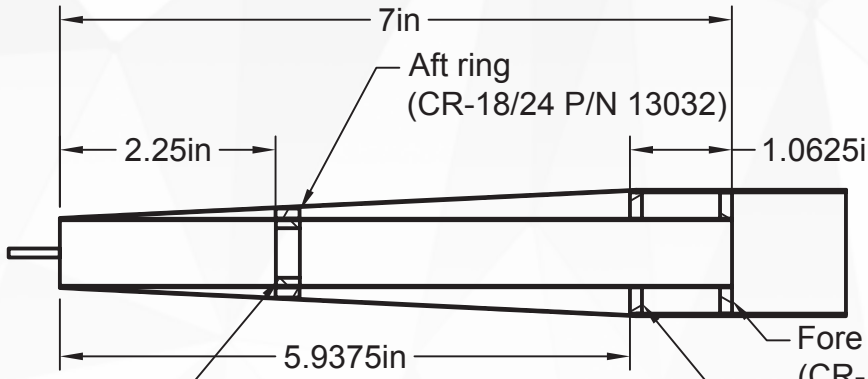

SECTION A-A
SCALE 1:2

Continued on page 9

Dolphin Rocket Plan

Continued from page 8

Fin Template Notes:

The full-size fin templates show a recommended layout as well as provide all four fin shapes which are necessary for the design. For both the fore (1/16”) and aft (3/32”) fins, two of the bottom fins and one top fin are required. Also, pay attention to keeping the grain direction roughly parallel to the front edge of the fins to avoid the fins cracking with impact.

Front Fin Template

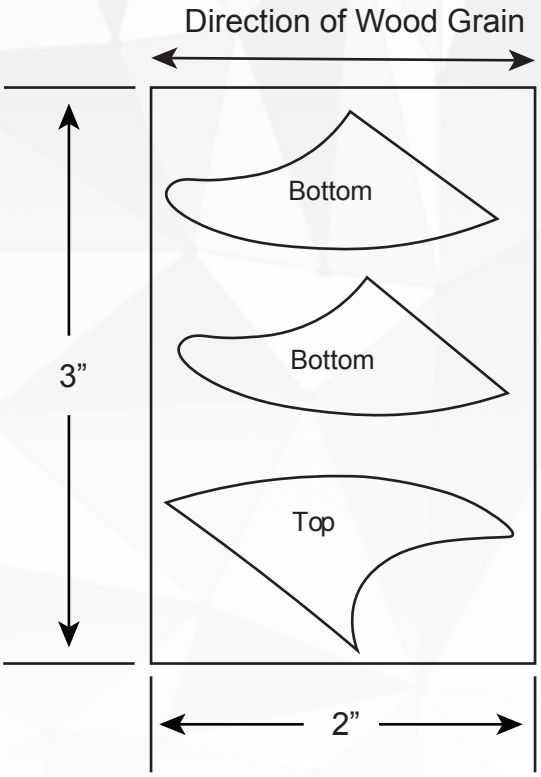

Rear Fin Template

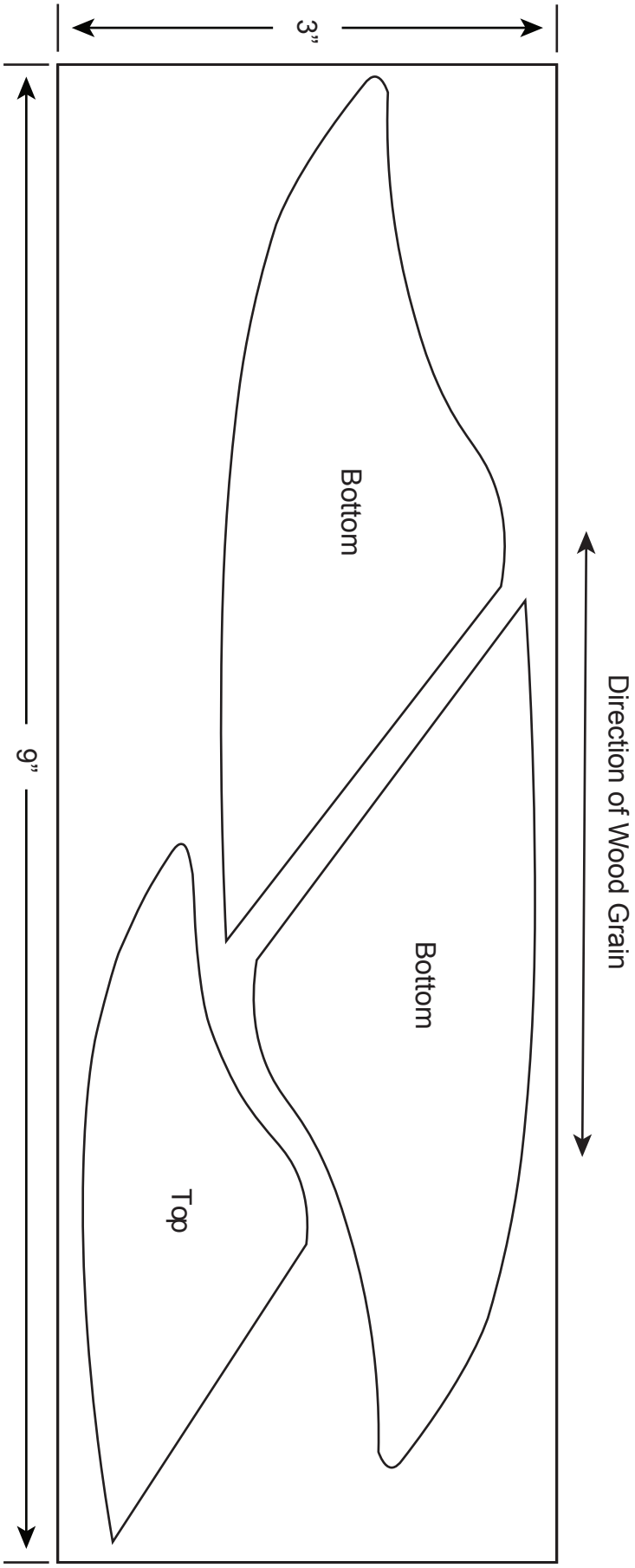

Continued on page 10

Dolphin Rocket Plan

Continued from page 9

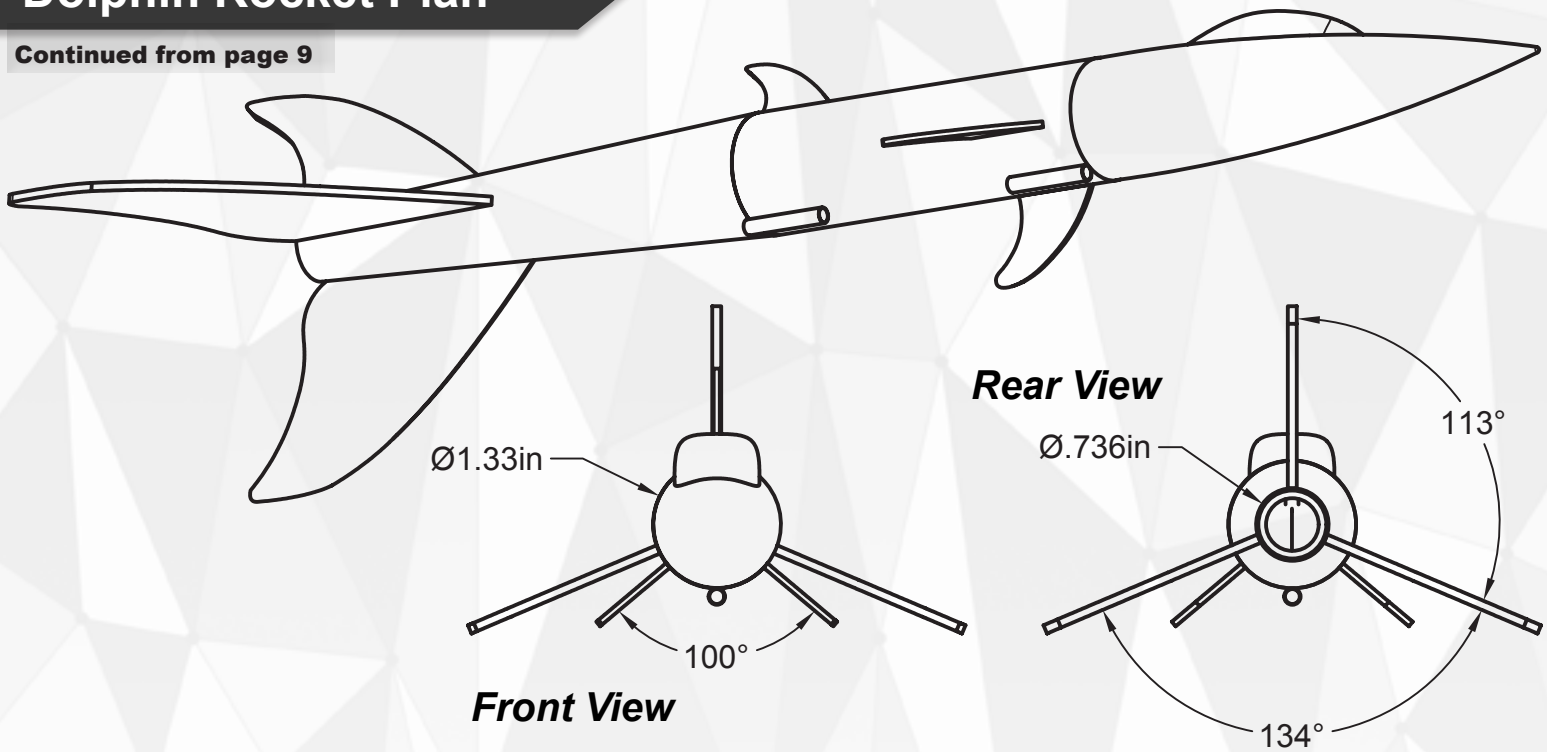

Continued on page 11

Dolphin Rocket Plan

Continued from page 10

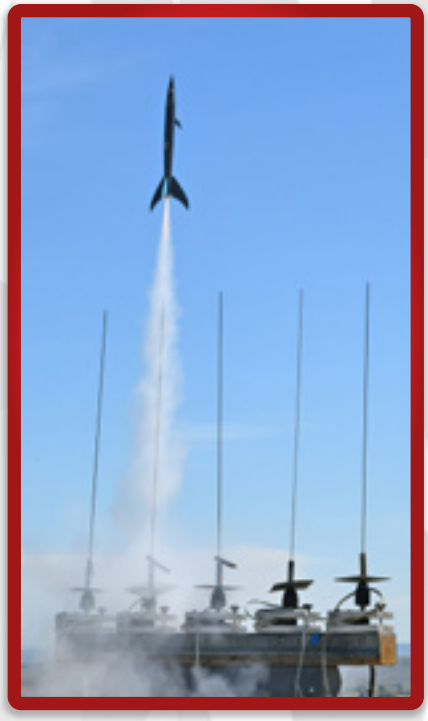

Rear Fuselage Transition

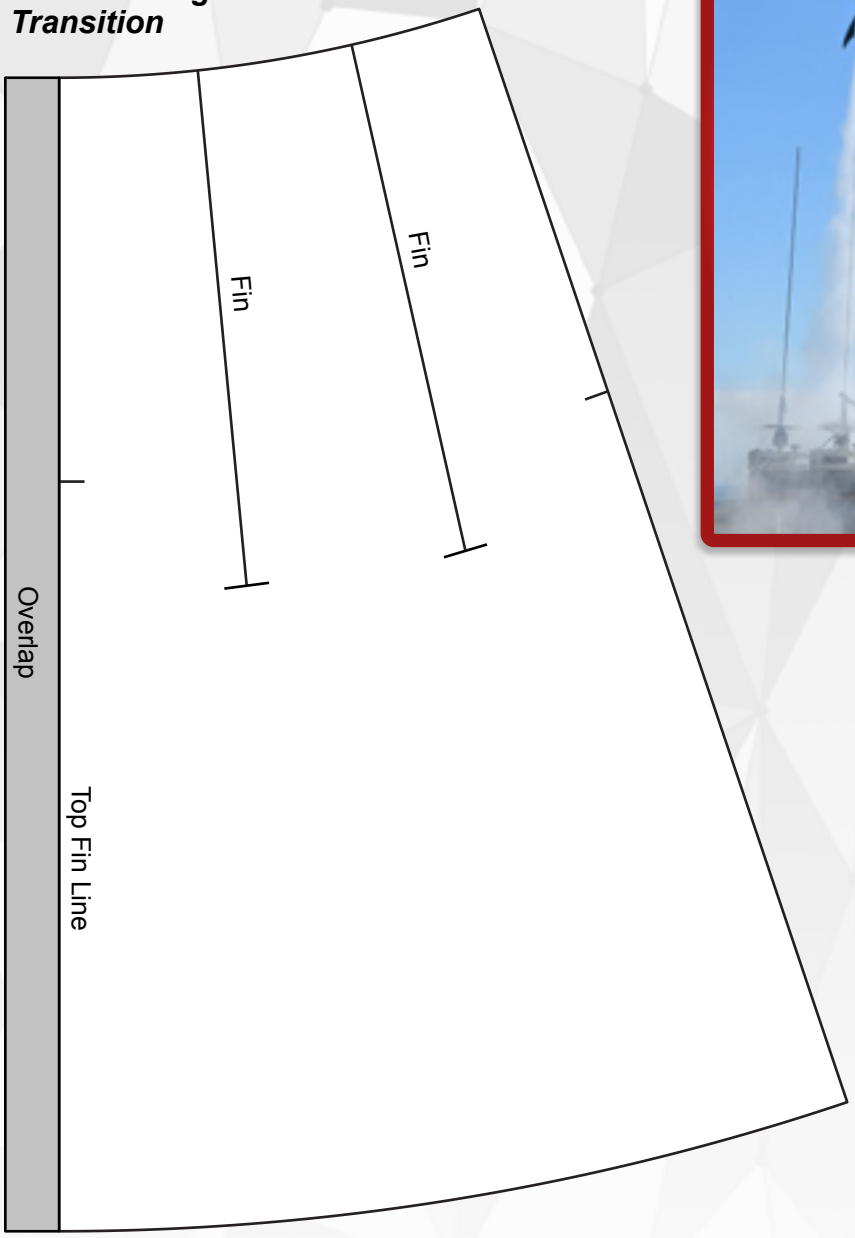

1 INCH

Front Fin Wrap

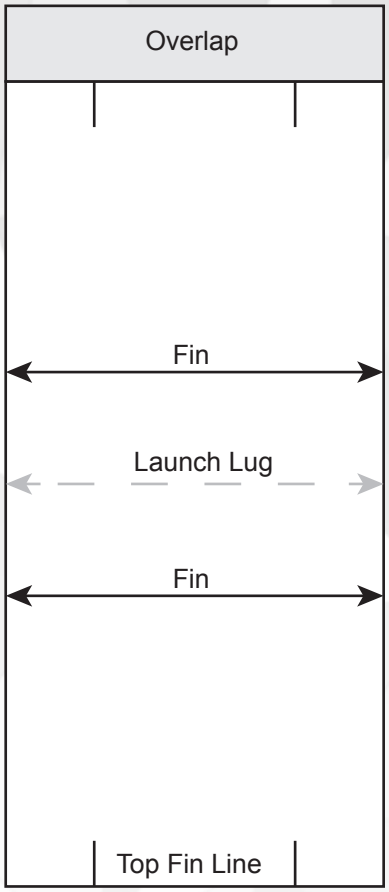

General Notes:

For stability, the CG of the fully loaded rocket should be no more than 10.25” back from the tip of the nose. If flying large engines (C or D), check the CG position and add nose weight (clay pressed into the nose cone) if required to ensure stability.

Install shock cord into engine tube at the beginning of the engine mount/rear body assembly process.