PEAK OF FLIGHT NEWSLETTER

ISSUE 586 / NOV 8TH 2022

IN THIS ISSUE

BARRIERS TO THE GROWTH OF MODEL ROCKETRY

GAP-STAGED Mini

Aerobee 170

FREE PLAN

Available in This Issue!

https://www.apogeerockets.com/Peak-of-Flight-Rocket-Plans

www.ApogeeRockets.com
4960 Northpark Dr, Colorado Springs CO 80918
Ph# 719-535-9335

APOGEE COMPONENTS

PEAK OF FLIGHT

Barriers to the Growth of Model Rocketry

By Martin Jay McKee

In Issue #582 of *Peak-of-Flight* (https://www.apogeerockets.com/education/downloads/Newsletter582.pdf), Casey Willett proposed working to increase the growth of model rocketry. This can only be a good thing. The growth of active NAR (and Tripoli) members is certainly an important goal for the survival and further development of model rocketry as a hobby. Both as a hobbyist for many years and now as a professional in the industry, the growth of the hobby is a net asset to me, as I believe it is to all of us who enjoy the hobby. Increased membership has many benefits.

As Casey mentioned, more fliers means more money shared between the manufacturers and, as a result, greater ability to innovate. It means more availability of kits, engines, education, and community. Additionally, more membership strengthens the lobbying power of groups such as the NAR. The importance of this has been brought into stark relief in recent years by a number of regulations instigated by the FAA regarding unmanned vehicles [4].

If the AMA (the Academy of Model Aeronautics) had not been as strong as it was due to member support, some of the wins they have had recently with regards to limiting regulation of recreational flying would not have happened. There is strength in numbers. Of course, there is another important advantage to expanding the hobby – sharing the fun. No doubt, many of the suggestions provided by Casey Willet are important to expanding the reach of model rocketry throughout the twenty-first century. He explained the importance of providing a low-cost (be that in terms of money, time, or effort) experience to introduce people to a new hobby.

This article approaches growth slightly differently by asking the question, "what barriers are there for model rocketry gateway experiences?" And examines some of the potential reasons. In my opinion, it is not simply a lack of social media presence or of low-stakes competition.

There are some particularly difficult barriers to entry when it comes to flying model rockets, and in this article I explore three particular facets. These three barriers are: finding a launch site, an appearance of excessive risk, and the appearance of being extremely "technical." I do not intend to provide complete solutions to all of these issues. I don't think I could. The goal is to give a jumping off point to find such solutions and to request additional suggestions of both solutions and other potential obstacles to the sports' growth.

Where to Launch?

In the early days of the hobby – when Vern and Glenda Estes were founding Estes Rockets (1958) and Jim Barrowman was providing a much simplified approach to accurately estimating the stability of model rockets (1966) – the world was a very different place. It was pretty typical for every neighborhood to have one or more empty fields. Moreover, farm land was much closer and more available than it is now. Model rockets were typically fairly small affairs with limited altitude potential. It was easy to find an open field, and rockets couldn't go all that far regardless.

About this Newsletter

You can subscribe to receive this e-zine FREE at the Apogee Components website www.ApogeeComponents.com, or by clicking the link here Newsletter Sign-Up

Newsletter Staff

Writer: Martin Jay McKee
Cover & Layout: Derek Villar
Proofreader: Michelle Mason

Continued on page 3

Barriers to the Growth of Model Rocketry

Continued from page 2

None of that is true any longer. The continued building up of cities has meant that more and more people are left without an obvious place to fly rockets. Additionally, municipalities have put into place laws that negatively affect a modeler's ability to fly. For instance, the city of Colorado Springs has a "no projectiles" ordinance which is an effective ban on flying model rockets in parks. The ordinance was enacted to crack down on archery practice in public areas. Model rocketry was an unintended casualty of the rule. As a child in Denver, I flew at parks often. That is often no longer an option. Schools are another place that model rockets could be flown in the past but, perhaps, no longer. Due to safety concerns, schools will often limit activities that can be undertaken on their property outside of school hours. This includes things like running on the track, playing on the playgrounds, and – of course – launching rockets.

Some schools may be willing to allow such launches but it is not always easy to find out. In an effort to research this article, I encountered endless phone tag and being redirected to other members on the staff when I called a local school district attempting to find out what their regulations were for flying rockets on their properties. After having talked to over half a dozen people, I still had no answer. As such, while launching at a school may be possible, it may require either an "in" (such as a child in the school) or substantially more persistence than I had time for. Beyond the increasing regulation of public areas (to the detriment of launch potential) there are the proximity concerns to airports and other reserved airspace. The cities are simply running out of suitable spaces for flying many model rockets.

This would be true even if the discussion was only necessary regarding small model rockets such as those flown in the sixties, but it's not. The rise of high-power rocketry and the expansion of medium-power rocketry makes much of the flying that people would like to do all the more difficult. Finding a suitable flying site is a large barrier to entry that does not exist for many hobbies (including those mentioned in Casey's article). Another related hobby which has faced similar issues is model airplanes and their more recent descendent – drones. When drones were first introduced, hobbyists were flying them everywhere. And with drones, unlike model rocketry, there is no ingrained culture of safety.

Continued on page 4

Barriers to the Growth of Model Rocketry

Continued from page 3

As a result, there were several events that caused lawmakers to take note of the issues posed by drones in the airspace. Indeed, the FAA released new regulations which are scheduled to take full effect in September 2023, that constrain where drones are allowed to fly and add the requirement for remote ID capabilities (the drone must be able to identify its own location and the location of its pilot to authorities [1]). Moreover, the aircraft must be registered with the FAA. While development of these regulations was initially triggered by the explosion of interest in drones and the potential for commercial applications of unmanned aerial vehicles (UAV), these regulations – as ratified – apply to all unmanned vehicles over 250 grams (~9 oz); traditional model airplanes will now need to obey the same rules.

Only predefined flying sites will be available to those who have drones without remote ID. Flights in other areas will be constrained by geofencing and will require carrying a remote ID transceiver which is projected to cost between $50 and $200. It should be remembered that some of these planes may only cost $100, so this is a large financial burden on casual hobbyists. Generally, the FAA seems to be making an effort (though some may object that they have been forced into it by the AMA and other groups) to make reasonable accommodations for hobbyists and educational institutions, but this will still mean major changes in the way that the hobby of radio-controlled airplanes, helicopters, and drone can be pursued. These sort of restrictions could easily be levied against model rockets if their flying becomes a public nuisance. As such, it is important to continue flying with the same respect and eye to safety that has made model rocketry such a safe hobby the last sixty years (NAR founded 1957 by G. Harry Stine and Orville Carlisle).

The simplest solution to the problem of finding a flying site is almost so obvious that it seems not worth mentioning - that is, flying with an established club. In our area (Colorado Springs), there are a number of NAR chartered clubs within a reasonable drive. COSROCS is the nearest club and they fly from a school field once a month (so clearly it is possible to contact the right people with persistence!). They also do flights from a couple of other fields (up to an hour and a half away) with different limitations on rockets.

Continued on page 5

Barriers to the Growth of Model Rocketry

Continued from page 4

SCORE (Southern Colorado Rocketeers) is an hour away in Pueblo and allows high-power flights with a waiver of 8,000ft and the ability to launch just about any rocket one might want. CRASH is a bit over an hour the other way, but is limited to smaller, non-waivered flights. That's three clubs within a couple of hours. On any given Saturday, there is likely to be a launch happening around us. So why not go to a club launch? Obviously, a launch two hours away is quite an investment of both time and money. Someone who is interested in the hobby for themselves may be fully willing to commit to that. A parent that is just a driver for their child may not be (though one can hope). More importantly though, you have to know that the launch is happening for it to be of benefit. NAR and Tripoli provide club map locators which helps with this. Clubs still have to provide sufficient information on the locator page (or their own web sites) so that potential newcomers will be able to find a flight near them and at a time that works for them.

Safety Concerns

Beyond the difficulties inherent in simply finding a site to fly from, there is a general misunderstanding among non-rocketry hobbyists about the intrinsic safety of the sport. Having been a teacher who brought rocketry as a pedagogical tool to my principals many times, one of the first concerns I had to address was often the potential of burning down the football field. Even in the extremely cost constrained setting of public education, safety was a greater concern. There was often a very real fear on the part of the administration that my little rockets would cause major damage or injury. This fear was an expected response and I was prepared to educate the school administration on how safe rocketry truly is, and can be. It is telling of the general view that the public has of model rockets, however. In the end my requests were never – ultimately – denied (on the condition that I found the money for it!).

Once people understand what goes into a rocket, how to approach it safely, and why it need not be feared, they are generally more than happy to allow students, children, and themselves, to take part. Such safety education, however, is not something that draws people to the hobby. For many, it is a necessary evil that must be endured once they are already in it. Thus, it acts as a barrier to entry.

There are many areas that may raise concerns about the safety of the hobby. Obviously, the safety of an Estes Alpha III versus an 80 lb all-fiberglass L3 high-power flight are vastly different discussions. Still, there are three areas that I received the most questions from parents and administrators: 1) the explosiveness of model rocket motors, 2) the danger of rockets as projectiles, and 3) the potential of causing fires. I include explosiveness and causing fires as separate issues because their explanations are very different. First, it must be said that model rocket

Continued on page 6

www.apogeerockets.com/Building_Supplies/Launch_Lugs_Rail_Buttons/Rail_Buttons

Barriers to the Growth of Model Rocketry

Continued from page 5

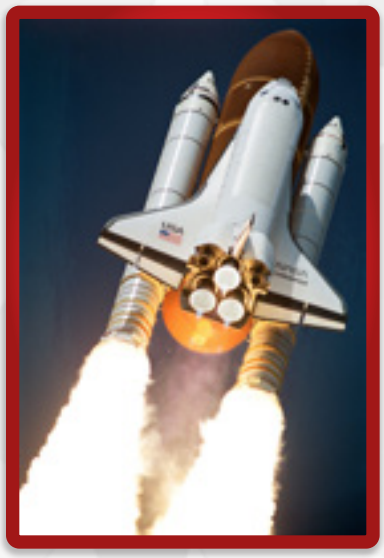

motors are not explosives as people may imagine them. When someone talks about an explosive they are typically thinking of a high-explosive, as may be used in weapons, fireworks, or to remove stubborn stumps. That is not what constitutes the propellant of a model rocket motor. According to 27 CFR Part 555.11 [2] an explosive is defined as:

Any chemical compound, mixture, or device, the primary or common purpose of which is to function by explosion. The term includes, but is not limited to, dynamite and other high explosives, black powder, pellet powder, initiating explosives, detonators, safety fuses, squibs, detonating cord, igniter cord, and igniters.

While classified here as an explosive according to the BATFE, black powder has handling exceptions for quantities of less than 50 lbs [3]. That's 50 pounds! An Estes D12 engine has 21g (0.046 lb) of black powder, so the exceptions would only apply for more than roughly 1000 D12 engines – substantially more than any hobbyist is likely to ever consider collecting together at once. It simply isn't the danger that it seems to be with the label "explosive", and the exceptions that are provided by the regulations recognize that.

Composite propellants are even less dangerous. As of 2009 (in a revision of the aforementioned Part 555), the BATFE no longer classifies APCP propellants as explosives at all. Why does any of this matter? Because the concerns that people have regarding any potential explosive potential of model rocket motors has already been considered and protected against. The publication NFPA 1125 [6] outlines the manufacture of model rocket motors and is a treasure trove of information regarding the safe production and storage of model rocket motors. As with the other safety concerns about model rocketry, education is a complete solution. The question is how to ensure that potential new hobbyists are aware of these facts.

A somewhat more difficult danger to dissuade the general public from being concerned about is the potential danger of model rockets as a projectile. They can potentially be dangerous to both property and life. That is absolutely true. But, that is also the reason for the safety culture that is so prevalent in model rocketry and which is codified by the safety codes ratified by NAR and Tripoli

Continued on page 7

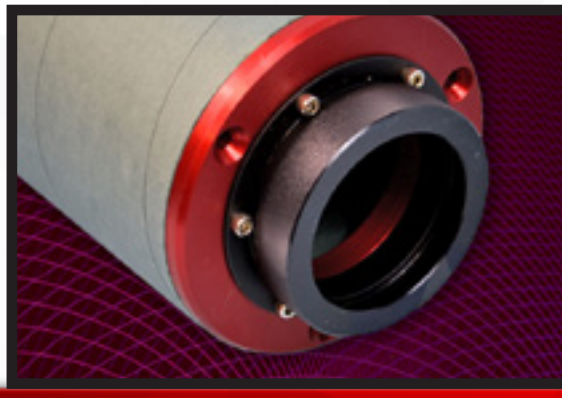

EXPERIENCED HPR BUILDERS USE THRUST PLATES

- Eliminates Shear Forces on Centering Rings
- Mates with AeroPacks Flanged Engine Retainers
- Fits Standard HPR Tubes, Blue Tubes, and Fiberglass Tubes
- Made from Aircraft Grade Aluminum

https://www.apogeerockets.com/Building_Supplies/Thrust_Plates

Barriers to the Growth of Model Rocketry

Continued from page 6

[5][7]. There was one moderately high profile death as a result of a model rocket as a projectile in 2015. Importantly, this was not at a NAR sanctioned launch, and if the safety code mentioned above had been followed, there is a very high probability that the event would not have happened. This is what needs to be understood by the general public. Model rocketry – when done in a way that is consistent with best practice – is exceptionally safe. This need not be a major barrier to entry either. There are plenty of activities that people are involved in that have the potential for massive personal harm or loss of property. Climbing gyms are everywhere around me, and they are frequented by both parents and children scaling 10' to 20' up the walls without a harness. Certainly, there are rules in place to reduce risks, and the floors are deep padding, but injury is always possible. Still, I have had a number of parents over the years question me about the possibility of their child being hit by a rocket. There seems to be something about model rocketry that makes it more difficult for the general public to accept some potential risks.

This is, again, a place where education could be a powerful force. It is difficult to argue with the safety record of NAR and Tripoli sanctioned launches. This is also another argument for flying with a club as clubs tend to have the capacity for launching from pads further away than most individuals. In the end, there is no doubt that rockets could, potentially, be dangerous. That is not in dispute. What must be conveyed, however, is the low level of risk when rockets are launched in agreement with established safety standards.

The final safety related issue relates to the potential of a model rocket to start a fire. Indeed, I have seen this happen a few times in my own launch career. The worst was during a launch where a rocket lost a fin just as it left the launch rod and so – under thrust – tumbled over the cars parked in the lot and plowed directly into a pile of dried grass about 30 yards from the pad. Within seconds, a fire had started and was burning knee high. It proceeded to spread – fanned by 10 mile-per-hour winds.

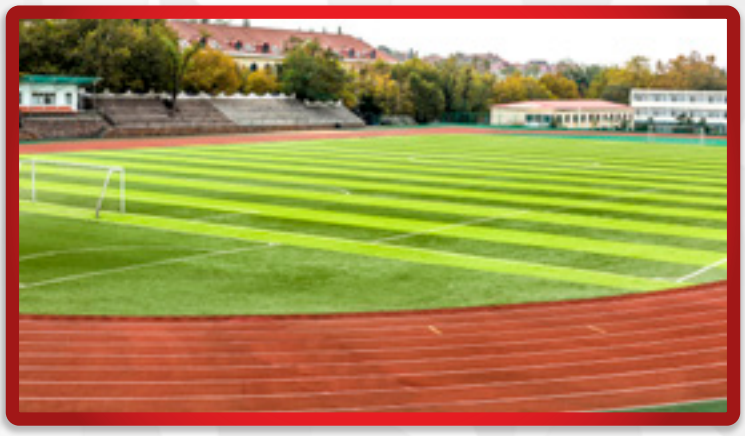

This could have potentially been a disaster. What is memorable about the story however, is why it was – in the end – no big deal. Because it was a club launch with water, shovels, fire extinguishers, and members who understood the necessity of being prepared for such an eventuality, many of us rushed about 20' to the downwind side of the fire and dug an encircling fire break, while the remainder

Continued on page 8

Barriers to the Growth of Model Rocketry

Continued from page 7

threw dirt on the active flames from the back. In only a couple of minutes, the fire was out and the launch was back on. It should be understood that this was on the top of a hill covered with dry grass for acres. While the pad area was well cleared, the surrounding area was a tinderbox. Combined with warm temperatures (about 80° F), it was nearly a worst case scenario for an out of control fire. Yet, knowledge of safety protocols once again made that risk entirely manageable. This is a similar situation as having a campfire, for example. Comparing that scenario to those which typically cause concern to school administrators, it becomes clear that the risk is minimal if not negligible. A rocket landing on a well irrigated sports field or bleachers made of aluminum and steel will simply not be affected. Once again, education is the important solution to this issue. Education of the actual dangers in addition to how those dangers are mitigated (for instance, rules surrounding when sparky motors are allowed to be flown) make it clear that fire damage as a result of flying model rockets is unlikely in the extreme.

Education of safety measures however is often a tough sell. As such, while safety concerns could be easily allayed by education, it may be the case that we will not have the opportunity to provide said education before someone has decided that model rocketry is for them. Rather, it seems that a better approach to making the safety of model rocketry clear is to increase general outreach and in so doing normalize the hobby to a greater extent. It is a very human trait to be skeptical of that which we are unfamiliar with. Even in the absence of reducing the apparent risks, simply making something more familiar can go a long way to making one less concerned about those risks.

How do we make rocketry more approachable?

As an experienced rocketeer, there is sometimes a rush of adrenaline that comes when someone trivializes a task by saying, “well, it’s not rocket science.” Rocket science has the reputation of being extremely difficult, beyond most people even. Some of that reputation is most certainly deserved. Yet, model rocketry falls prey to the fear that such a lofty challenge might present. Contrary to the view that rocketry is difficult, almost anyone can learn enough to safely build and fly an Apogee Avion (https://www.apogeerockets.com/Rocket-Kits/Skill-Level-1-Model-Rocket-Kits/Avion) or Estes Alpha. Age and education are not limiting factors. One does not need to be “interested in science and math” to be successful. Nor does it require someone who is an impeccable craftsperson.

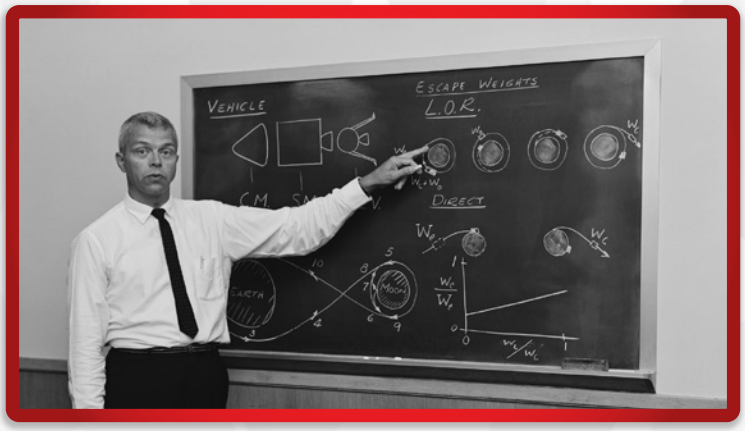

Model rocketry is, as it happens, a relatively approachable hobby, if approached at a level that is appropriate to the person. So this raises the question,

Continued on page 9

Barriers to the Growth of Model Rocketry

Continued from page 8

"why is model rocketry viewed as something more difficult than other technical hobbies?" And, to be fair, this is not a question for which I feel I have a good answer. In contrast, the construction, modification, and use of 3D printers is a fairly recent technical hobby that appeals to all sorts of people – both technical and non-technical. It is possible to design and build a new printer with only a cursory understanding of the kinematics of the motion system, or the dynamics of the fluid plastic in the melt zone. A kit can be built with no knowledge of the theory at all.

However, it is also possible (and has indeed happened) to turn the design into a master's thesis with full dynamic analysis, algorithmic review and development, and all manner of manufacturing methods. The same is true of model rocketry. This seems, again, to be an example of model rocketry suffering from insufficient or inappropriate marketing. Rocketry is not a hobby only for the smartest among the population. It can be for everyone. And, this wide approachability of such a technical hobby (at its core) can be an opportunity.

The question then is how to present the technical challenges to prospective modelers in a way that is motivating rather than overwhelming. While Casey mentioned the importance of competition, it seems important to explicitly recognize the technical nature of the hobby in the formulation of such competitions. The NARTREK program (https://www.apogeerockets.com/NARTREK) is a good model here. As the levels progress, two things happen: 1) the difficulty of the challenges increase, and 2) the personal responsibility required of the modeler increases. The result of these two changes together is that as the modeler achieves progressive levels (Bronze, Silver, Gold, etc.), they inevitably become more skilled in general rocketry practice well beyond the identified challenges within the levels.

NARTREK, however, is not visible enough to be a guide for modelers coming into the hobby separate from the NAR or local clubs. Moreover, it does not provide the immediacy or excitement of competition and it has rather limited relation to anything approaching high power rocketry, so it may prove uninteresting for some new modelers. With the ability to guide students, these issues are much easier to solve in a classroom setting. It is easy to arrange for competitions in a classroom and the overall level of difficulty (or confusion) can be scaled appropriately by the educator. It is not clear how these same adaptations can be made for the general public that may be coming to the hobby from the outside. More thought into marketing the challenges of model rocketry, however, would be beneficial to reduce the potential of incoming modelers feeling intellectually challenged beyond their capacity. Or the even more unfortunate case of people avoiding model rocketry from the outset due to an unjustified fear of its technical difficulty.

Continued on page 10

JOIN TRIPOLI.ORG
Mention Apogee Components

NEED A PARACHUTE?
APOGEE HAS THE ONE YOU'RE LOOKING FOR!
www.ApogeeRockets.com/Building-Supplies/Parachutes

CHECK OUT THE APOGEE YouTube PAGE
CLICK OR SUBSCRIBE HERE FOR OUR HELPFUL
AND INFORMATIVE HOW-TO VIDEOS
ON MODEL ROCKETRY
https://www.youtube.com/c/apogeerockets
Apogee Components

Barriers to the Growth of Model Rocketry

Continued from page 9

Model rocketry has had a long history of being an excellent vehicle for discovery, and doing so safely across all demographics. In some ways, the unique features of model rocketry that make it so ideal for teaching concepts of physics, aerodynamics, mechanical design, and construction are the very things that make it seem a hobby for only the most intelligent or skilled. Yet, that need not be the case. Just about any child who has advanced to the point of having fine motor control and a modicum of ability to focus their attention can be successful in model rocketry. Similarly, the safety of model rocketry is a problem in perception only. Model rocketry organizations have successfully made safe involvement a primary goal over the past half century and, as a result, serious injuries as a result of launching model rockets are extremely rare. The final barrier to entry mentioned above – finding a flying field – is not only one of perception. It can be a major issue – as in Colorado Springs where there is a blanket ban on launching in all city parks.

So how do we lower these potential barriers and, perhaps even more importantly, are these the most important barriers to develop strategies against? As I've discussed these potential issues, I have mentioned some thoughts that could be beneficial for minimizing the effects; however I am under no illusions that I have answers that will – if implemented – solve the problem in its entirety.

In seeking to expand the membership of NAR and Tripoli or conversely to simply increase the number of individuals who build and fly model rockets on a regular basis, there are many necessary tasks to be done. Casey's article enumerated approaches to increasing engagement in the hobby. I would, indeed, reflect upon Casey's suggestion to share rocketry with the Scouts by reflecting on my own involvement with the establishment of a rocketry club. The SLVROC (NAR #774) club sprang out of model rocket classes at the Alamosa Boys and Girls Club, the Alamosa Rec Center, and a couple of local Scout troops. These classes started with children, then L1 cert classes with interested parents. The end-of-class launches grew as interest did, beginning with only small numbers but they rapidly became twice-yearly events with hundreds of participants and spectators. In only a handful of years, the club went from a couple of interested modelers who wanted to share their hobby with children to founding a new club, and even to hosting a successful National Sport Launch.

Growth is absolutely possible, once the barriers are lowered. So how do we best do that? If you have any ideas, or stories of solutions that have worked, please let us know here at Apogee either via email on our contact page (https://www.apogeerockets.com/Contact) or on our

Continued on page 11

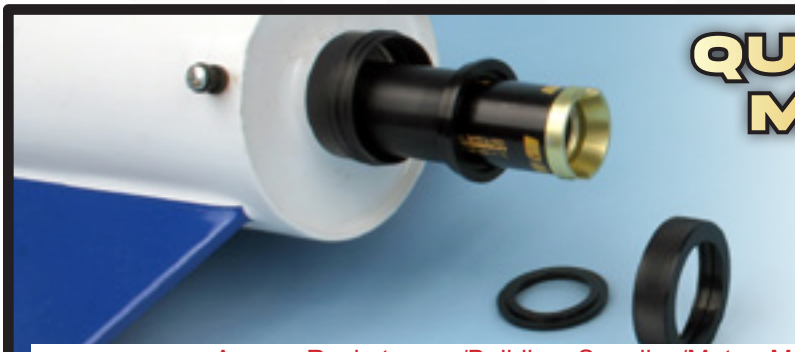

QUICK-CHANGE MOTOR ADAPTERS

- Allows you to use smaller diameter motors in your rocket kits (adds versatility)
- Change out motors in seconds
- Works with all single-use and re-loadable motors
- Four sizes available

www.ApogeeRockets.com/Building_Supplies/Motor_Mount_Kits_Adapters/Ready-to-use_Motor_Adapters

Barriers to the Growth of Model Rocketry

Continued from page 10

Facebook page (https://www.facebook.com/apogeerockets). There is nothing that is better than the look on the face of a first time rocket builder when they see their first rocket rise up into the air on a column of fire, then land gently again under a fully open chute. Let's work together to make more first flights possible.

References:

14 CFR Part 89 "Remote Identification of Unmanned Aircraft", https://www.ecfr.gov/current/title-14/chapter-I/subchapter-F/part-89

27 CFR Part 555.11, "Definitions", https://atf-eregs.18f.gov/555-11/2019-24570#555-11

27 CFR Part 555.141, "Exceptions", https://atf-eregs.18f.gov/555-141/2019-24570#555-141

AC 91-57C "Exceptions for Limited Recreational Operations of Unmanned Aircraft" – https://www.faa.gov/regulations_policies/advisory_circulars/index.cfm/go/document.information/documentID/1041362

NAR Safety Code, https://www.nar.org/safety-information/model-rocket-safety-code/

NFPA 1125, "Code for the Manufacture of Model Rocket and High Power Rocket Motors", current version at https://www.nfpa.org/codes-and-standards/all-codes-and-standards/list-of-codes-and-standards/detail?code=1125 or pdf of 2007 version available at, https://atapars.com/wp-content/uploads/2021/01/atapars.com-NFPA-1125-2007.pdf

Tripoli Safety Code, https://www.tripoli.org/safety

Image Attribution:
"Altus UAS Out of New Zealand, Demonstrates Their Drone Models for classes at ERAU Prescott", Connor McShane, Embry-Riddle Aeronautical University

www.ApogeeRockets.com/RockSim/RockSim_Information

Check out our Facebook page
www.facebook.com/ApogeeRockets

www.apogeerockets.com/Rocket-Kits/Skill-Level-2-Model-Rocket-Kits/SkyMetra

Gap-Staged Mini Aerobee 170 Plan

Aerobee 170 Parts List

10063 – (1) AT-13/18" Body Tube (BT-5)
10086 – (1) AT-18/18" Body Tube (BT-20)
13014 – (1) AC-13 (BT-5) Coupler
(for alignment of milk stool during assembly)
13021 – (2) Centering Ring 10.5mm to 13mm
13028 – (8) Centering Ring 13mm to 18mm
13052 – (1) ⅛"x1.25" Launch Lug
14252 – (1) Graphite Rod 0.050"x12"
(for interstage struts)
14098 – (1) 1/16"x3"x18" Balsa Sheet
(for fins)
19802 – (1) PNC-18C Nose Cone
30303 – (1) 2"x56" Mylar Streamer
(12" for booster and 44" for sustainer)
30325 – (5) Kevlar Cord 100#
(2' for booster and 3' for sustainer)
– a small strip of cross-grain 1/32" balsa for the interstage detail

Order parts at:
https://www.apogeerockets.com/Quick_Order

Recommend Motors

(Altitudes calculated at empty weight of 125g)

Estes A10-0T / ½A3-4T 230' (70 m)
Estes A10-0T / A3-4T 545' (166 m)

Download the ***RockSim*** design file for the Gap-Staged Mini Aerobee 170 at:
https://www.apogeerockets.com/Peak-of-Flight-Rocket-Plans

Gap-Staged Mini Aerobee 170 *By Martin Jay McKee*

About the Design

The Aerobee 170 was a sounding rocket in the Aerobee series that consisted of an Aerobee 150A sustainer and a Nike booster. It was flown from 1968 through 1983 and could loft scientific payloads to an altitude of up to 168 miles. During its lifetime, the Aerobee 170 completed nearly 140 flights, mostly for NASA. This model is scaled at roughly 1:20.5 (based on the sustainer) and flies over 500' on inexpensive 13mm Estes motors. As it stands, it is reasonably accurate scale, but as a challenge it could be much better. The booster and sustainer were, on the full scale prototype, slightly different diameters (15" and 16.5" respectively). Also, the nose cone on the sustainer was a particularly long 5.5:1 ogive, the fins have very distinct tapered leading and trailing edge forms, and as is typical of sounding rockets, there are endless variations of prototypical paint schemes. Lots of fun could be had adding scale detail to make this a more accurate representation. Then again, this is a fun two-stage rocket that can be flown for very little money just as it is, and it will give loads of enjoyment without any additional scale work.

Continued on page 13

Gap-Staged Mini Aerobee 170 Plan

Continued from page 12

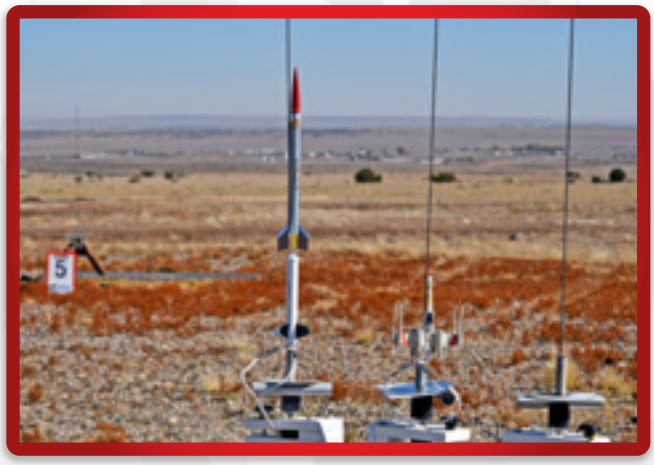

Notes on modification of the centering rings:

There are two centering rings used in this design that must be modified. The simpler of the two is used on the booster motor mount and simply has a quarter (90 degrees) of it removed. This modification is simple to complete with a sharp hobby knife. The other modified ring is the aft centering ring on the interstage joint which needs four slots cut half-way through. This modification can also be done with a hobby knife but is simpler to complete with a razor saw.

Notes on assembly of the milk stool:

To assemble the milk stool accurately, a 13mm coupler is used as an alignment guide. What is most important about the construction of the milk stool - and the whole interstage area for that matter - is that the attachment of the standoffs be secure. After wrapping the booster body tube with the 1/32" balsa strip, slots should be filed in the balsa to allow the struts to sit next to the cardboard body tube – the transition has the position of these slots marked and they should be aligned with the booster fins. Once the struts are glued into place, the attachment point on the body should be wrapped with either paper (tracing vellum is ideal) or light-weight fiberglass cloth. This allows the stresses to be carried by something other than the balsa, which is prone to splitting on a hard landing.

Fin Template

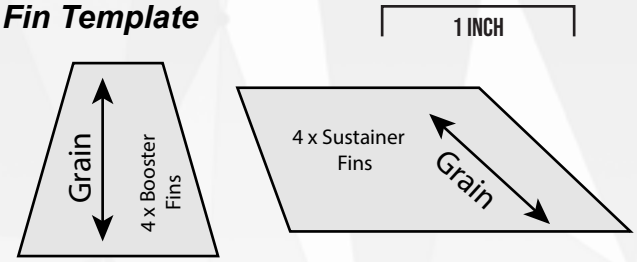

Fin Wrap

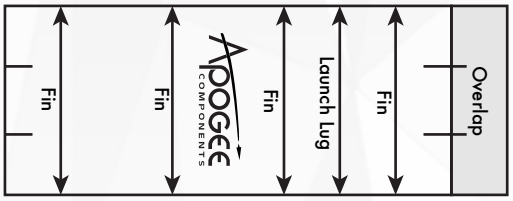

Decals

GRAIN TEMP LIMIT S
-20F to +130F

STORAGE TEMP LIMIT S
-20F to +130F

Transition

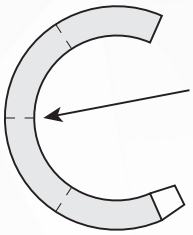

The four interstage strut locations are marked

Continued on page 14

Gap-Staged Mini Aerobee 170 Plan

Continued from page 13

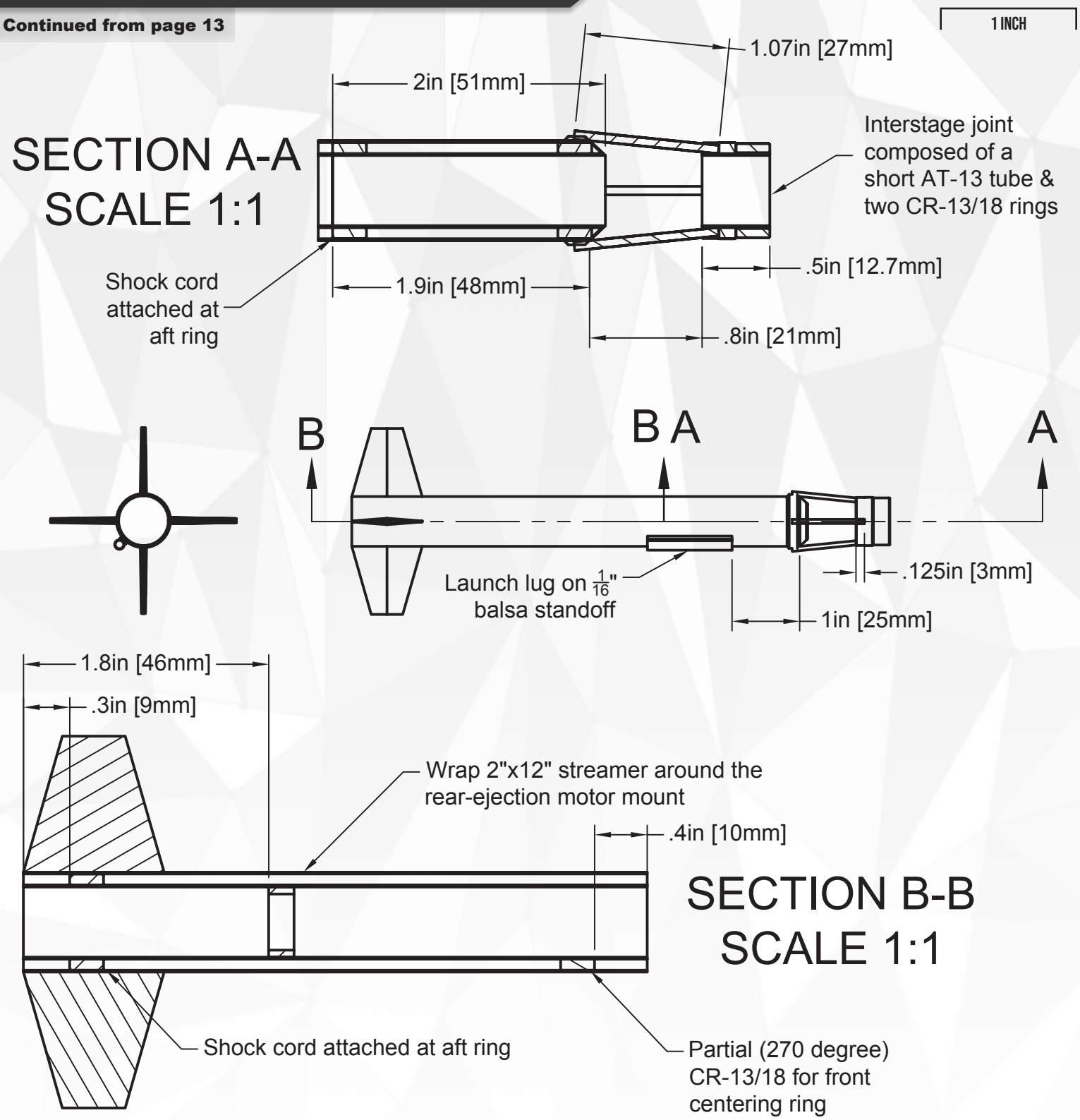

Continued on page 15

Gap-Staged Mini Aerobee 170 Plan

Continued from page 14

1 INCH

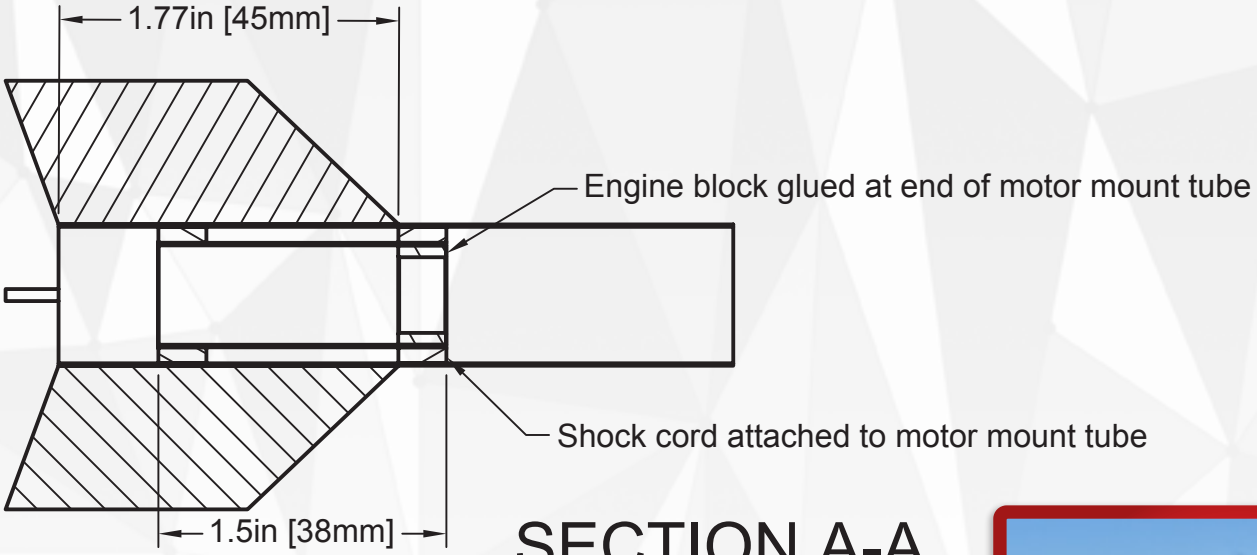

SECTION A-A
SCALE 1:1

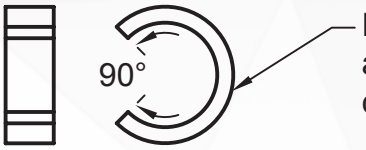

Forward booster motor mount ring has a section removed to allow the shock cord to pass through on rear ejection

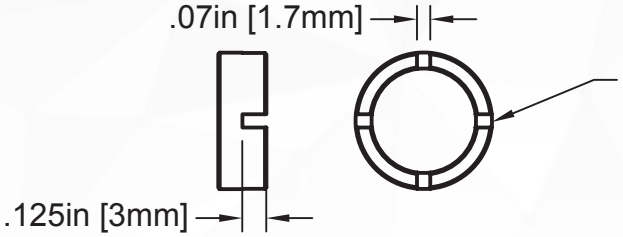

Aft ring on interstage coupler has four slots to glue the struts into

Continued on page 16

Gap-Staged Mini Aerobee 170 Plan

Continued from page 15

Notes on flight prep:

There are a number of fairly critical parts that need to be prepared correctly for a flight of the Aerobee 170 to be successful. First, both the interstage coupling and the rear ejection of the booster need to be sanded for easy separation during flight. It is appropriate for the rocket to "fall apart" when held, that is, the motor mount can simply fall out of the booster, or the booster fall off of the sustainer. Additionally, the streamer in the booster stage should be packed for easy deployment so that the milk stool is well protected (as it is, by far, the most easily broken portion of the design). Beyond that, the preparation of the rocket is just like any other gap-staged, two-stage black-powder flight.