PEAK OF FLIGHT NEWSLETTER

ISSUE 587 / NOV 22ND 2022

IN THIS ISSUE

HOW TO GROUND TEST A DUAL DEPLOYMENT ALTIMETER

https://www.apogeerockets.com/Model-Rocket-Kits/Skill-Level-4-Model-Rocket-Kits/Journey-75

www.ApogeeRockets.com
4960 Northpark Dr, Colorado Springs CO 80918
Ph# 719-535-9335

APOGEE COMPONENTS

PEAK OF FLIGHT

How to Ground Test a Dual Deployment Altimeter

By Tim Van Milligan

Ryan wrote me asking: *"I am stuck on researching how to do a test of dual deployment on the ground. I have the Peregrine and after I do my L1 cert, I want to do dual deployment.*

I see people hook up a shop vac and I assume it is pressurizing the rocket to trick out the altimeter. How do I run a test on the ground to trigger the drogue chute and the main chute - any videos on that?"

Very good question Ryan. I'll try to answer it here.

There are two aspects to be concerned about when doing a dual deployment. And that is why ground testing is important.

These are:

1. Verifying that the altimeter is set up properly and will fire off the starters at the correct altitudes.
2. Verifying that the amount of black powder used for the ejection charges is correct.

Fortunately, while they both need to occur during the flight, they can be tested separately. In other words, you don't need to hook up a shop vac to your rocket like you've seen other people do. This simplifies things, and makes it much safer to run your tests.

How Dual Deployment Electronics Works

At the heart of dual deployment is the altimeter. This is a special type of altimeter, in that it is designed to fire off two different igniters at different altitudes. So when you are searching for an altimeter, make sure it is called a "Dual Deployment Altimeter." We have a specific category page on our website that only lists those altimeters we carry that will work for dual deployment. You'll find it at: https://www.apogeerockets.com/Electronics_Payloads/Dual-Deployment. Any altimeter listed on that page is a dual deployment altimeter, and will work.

The altimeter has a pressure sensor on its board that will detect the altitude of the rocket. Remember from your grade-school science class that as you go higher into the air, the air pressure decreases. When you reach outer space, there is no air pressure, and you're in a vacuum. Remember that stuff?

These pressure sensors are very sensitive, so you can be assured that they will accurately measure the correct altitude.

What happens in our rocket's flight is that the altimeter is sensing that the pressure is decreasing as the rocket ascends. That is how it knows the rocket is still going upwards.

At apogee, the highest point in the flight, the pressure stops decreasing. When the pressure sensor on the altimeter detects that the air pressure has stopped decreasing and starts increasing again, it knows that the rocket has just passed apogee. This is the trigger to fire off the first igniter.

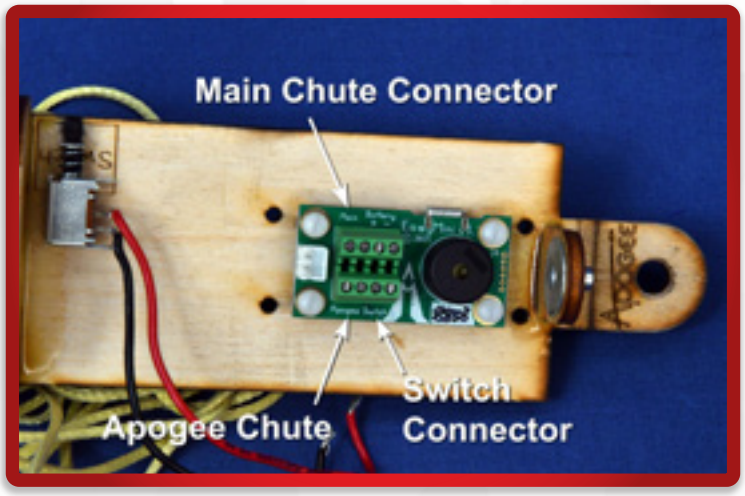

FIGURE 1: THE CONNECTOR POSITIONS ARE PRINTED ON THE ALTIMETER BOARD.

Continued on page 3

About this Newsletter
You can subscribe to receive this e-zine FREE at the Apogee Components website www.ApogeeComponents.com, or by clicking the link here Newsletter Sign-Up

Newsletter Staff
Writer: Tim Van Milligan
Cover & Layout: Derek Villar
Proofreader: Michelle Mason

How to Ground Test a Dual Deployment Altimeter

Continued from page 2

All dual deployment altimeters are designed to always fire off the first igniter at apogee. It is baked into their operation. You don't have to set anything on the altimeter to fire off the igniter for the apogee deployment. All you have to do is hook up the igniter to the correct connector on the altimeter.

As the rocket continues to descend, the air pressure as seen by the altimeter continues to increase. When the pressure rises to the value associated with the correct altitude for the main parachute to be ejected, it will trigger the second igniter to fire off.

The igniter heads at the ends of each of the wires (that are connected to the altimeter), are surrounded by a small packet of black powder. This black powder is called the "ejection charge''." There are two of them in the rocket, one for the apogee igniter, and one for the main chute igniter.

When the igniter is fired off by the altimeter, it sets off the black powder. This burning is explosive, and quickly produces a lot of high pressure gas inside the rocket. The pressure is what pushes the parachute out of the rocket. So you have two events in the rocket -- one at apogee when the first igniter is fired, and a second one at the altitude for the main parachute.

The purpose of ground testing is to make sure that everything works properly before we launch the rocket. We don't want our first test to be with the rocket in the sky, because if the altimeter doesn't work, then only bad things are going to happen.

As mentioned at the beginning, we want to test two different things: making sure the altimeter is operating and set up properly, and that the ejection charges are sufficient to push the parachutes out of the rocket.

Why two different tests?

These tests can be independent of each other. And for simplicity and safety, I recommend that you separate them. In reality, the connection between the two events is the firing of the igniter which will set off the black powder. So unless your black powder ejection charge is wet, I guarantee you that the igniter will set it off. We don't need to ground test that part using the altimeter to set off the ejection charge.

If you do that, then the altimeter has to be mounted in the rocket, and you have to pull some sort of vacuum on the altimeter to simulate the flight. This is where the shop vac comes in. But that is complicated and can add more safety hazards to the test. Do you want the ejection charge popping the rocket apart with an electric vacuum sitting right next to it?

Testing the Ejection Charge

The purpose of testing the ejection charge is to make sure the rocket separates fully so the parachutes can be deployed. The ejection charge has to overcome any friction holding the parts together, and maybe to cut shear pins if you are using them in your rocket.

Continued on page 4

How to Ground Test a Dual Deployment Altimeter

Continued from page 3

You can get an estimate of how much black powder you'll need for your ejection charges by using one of the ejection charge calculators found online. If you've never done that before, we made a video walking you through the process. https://www.apogeerockets.com/Advanced_Construction_Videos/Rocketry_Video_337

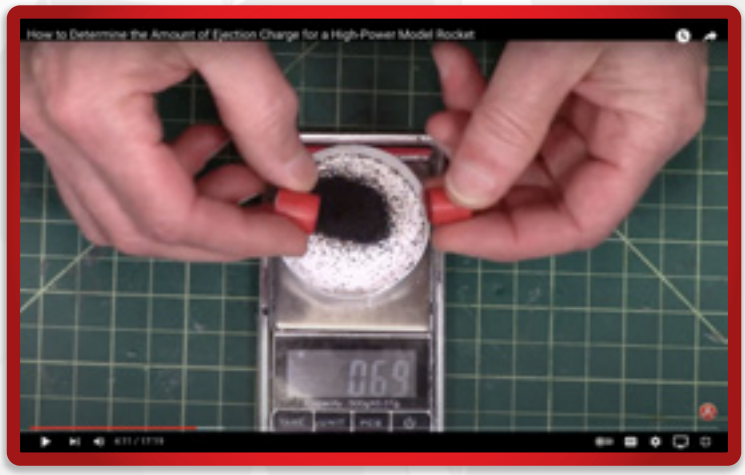

FIGURE 2: MEASURING OUT THE BLACK POWDER FOR THE EJECTION CHARGE.

But there are always some unknown forces that you haven't calculated for mathematically. That is why we often want to confirm the calculations are correct by running an ejection charge test.

With the exception of the electronics, prep the rocket like you'd do if it was an actual flight. Put in the wadding, parachute, shock cord. But don't put in a live rocket motor. However, when performing an ejection charge test, make sure to plug the motor tube. Use a spent engine and put it in the rocket, just like you would for normal launch. I've seen people forget to plug the motor tube, and then they wonder why the nose cone didn't separate. All the gas went out the rear of the rocket through the wide open hole.

You'll obviously do this test outdoors because you're firing off a small pile of black powder. Just lay the rocket on the ground sideways, or you could raise one end a bit, so that when it separates it doesn't get road rash from scooting on the ground. I've seen people put blankets or old carpeting on the ground to protect the nice paint finish on their rockets. All that is something you may want to consider doing too.

FIGURE 3: SET-UP OF AN EJECTION CHARGE TEST. BUT DO IT AWAY FROM CARS AND SPECTATORS.

Continued on page 5

How to Ground Test a Dual Deployment Altimeter

Continued from page 4

Make sure the area is clear of dry grass, etc. And alert all spectators of the impending boom. Follow all the same safety precautions that you normally would for a rocket launch.

The easiest way to test the ejection charge is to take out your portable launch controller and run the wires inside the parachute compartment that you are testing the ejection charge for. Remember, you typically have two compartments, so you'll need to do the test two times.

The advantage of using a portable launch controller is that you have complete control over when the igniter setting off the ejection charge goes off. Just press the launch button when it is safe, and when you want to fire off the ejection charges.

FIGURE 4: THE NOSE CONE SEPARATING FROM THE ROCKET DURING AN EJECTION TEST.

If you use the altimeter, you would have to wait for the right pressure for the sensor to ignite the ejection charge.

Precaution: The purpose of the ejection charge test is to separate the rocket's parts, not blow it up. I often see people use a "bit extra" of black powder just to be what they call: "safe." That's really not being safe… When you're actually prepping the rocket for launch, now you have too much powder onboard. And if there was a premature initiation while turning on the altimeter, you've made the situation even more dangerous. Unfortunately, I've seen several premature ejection charges go off, and serious injury is possible. Reduce that by using the minimum amount of black powder to do the job of separating the parts. Once the rocket is in the air, it is actually easier to get the rocket to separate and everything pulled out. So I recommend that you resist the urge to put in more black powder than you really need.

Testing the Altimeter

The purpose of this test has a few more facets. First of all, the electronics are typically not user friendly. They have to be wired up just to be able to turn them on. So your first objective of testing the altimeter is just to become familiar with its operation. Can you turn it on? Does it go through all of its self-checks properly? Do you understand what all the beeps mean?

So you'll do this check indoors, on your workbench. Grab a beverage and take your time to become familiar with its operation. Have the user's manual next to you, and read it thoroughly.

Continued on page 6

How to Ground Test a Dual Deployment Altimeter

Continued from page 5

There is usually some sort of option to fire off an igniter during bench testing. This is the next test you want to do. Can you successfully fire off the igniter that you want to use during the actual flight? Not all igniters will work with your altimeter and battery combination. We recommend an e-match or other low voltage/low current igniter.

This is where a lot of people start to freak out. I can hear what they are saying: "What? You want me to burn an expensive igniter? I can't afford to do that…"

I'll be honest with you. It pains me to hear people are reluctant to invest money in a simple test that will prove the proper operation of their rocket's systems. You're going to burn a lot of igniters, but that is the cost of doing dual deployment. Trust me… It is a lot more expensive if things go wrong on an actual flight.

Our next test is to make sure that the altimeter is sensing pressure differences and at the same time we want to verify we've set up the altimeter correctly to fire off the main parachute at the proper altitude. For example, when you set it to fire off at 600 feet, is it actually firing off when the rocket descents to 600 feet, instead of 200 feet?

This final test does require some extra equipment. You're going to need some sort of vacuum chamber. Fortunately, it doesn't have to be elaborate or expensive. You can make one from a simple plastic container with an airtight lid. See Peak-of-Flight Newsletter #256 (https://www.apogeerockets.com/education/downloads/Newsletter256.pdf). That article also shows how to make a syringe to pull the air out of the container. But if you're lazy like me, it is probably worth it to buy a 500ml syringe off of Amazon or some other website. You'll save a lot of time, and you'll get a better "suck" of the air out of the container.

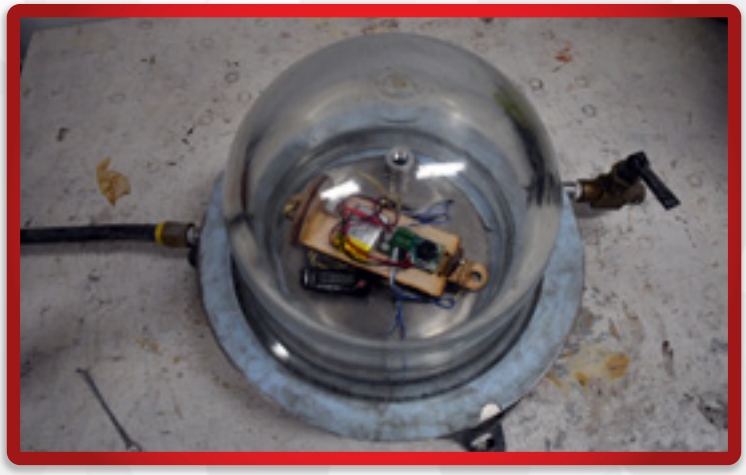

FIGURE 5: THE ELECTRONICS, BATTERY, AND IGNITERS INSIDE A SEE THROUGH VACUUM CHAMBER.

You'll just use the syringe to suck the air out of the container holding the altimeter and the igniters. That simulates the rocket going up in the air. There will probably be enough air leakage in the container to allow the pressure in the container to increase all by itself (which simulates the rocket descending downward). If everything is set up properly, the apogee igniter will fire off when you are done pulling on the syringe, and the main parachute's igniter will fire a few seconds later.

If both igniters fire, that is good.

Continued on page 7

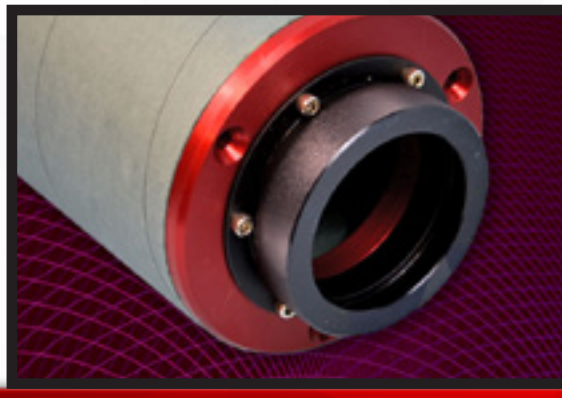

EXPERIENCED HPR BUILDERS USE THRUST PLATES

- Eliminates Shear Forces on Centering Rings
- Mates with AeroPacks Flanged Engine Retainers
- Fits Standard HPR Tubes, Blue Tubes, and Fiberglass Tubes
- Made from Aircraft Grade Aluminum

https://www.apogeerockets.com/Building_Supplies/Thrust_Plates

How to Ground Test a Dual Deployment Altimeter

Continued from page 6

Pull the altimeter out of the container, and count the beeps to verify that the altimeter fired the main parachute at the correct altitude. You can also see how good you were at pulling a vacuum to determine how high the altimeter read.

The big question is, how accurate is the altimeter at reading pressure? For that, we'd need to put in a different altimeter to have an independent reading. I like to use the Jolly Logic AltimeterOne for this, since it is inexpensive and has a "current altitude" display. What that means is you can put it into the vacuum chamber with the dual deployment altimeter, and actually see on the screen of the Jolly Logic what the current altitude it is reading. That will give you an indication of when the main parachute will fire, because you can watch the altitude indicator slowly coming down as air pressure inside the chamber increases.

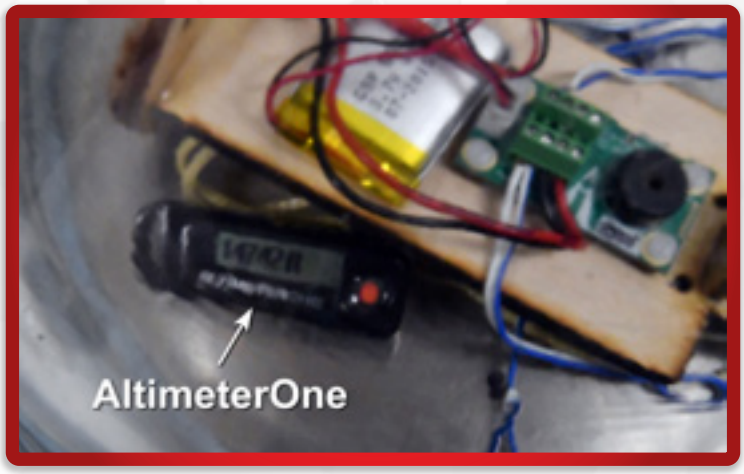

FIGURE 6: AN ALTIMETERONE INSIDE THE VACUUM CHAMBER CAN BE USED TO SEE THE CURRENT ALTITUDE INSIDE THE CONTAINER.

I did a video showing this at: https://www.apogeerockets.com/advanced_Construction_Videos/Rocketry_Video_94

Putting it all together

Once you've completed both the ejection charge test, and the altimeter verification tests, you can go ahead and prep the rocket for a real launch. This is what I'd do if I was flying a new rocket, along with an altimeter that I've never used before.

Doing these tests will give you the confidence that your rocket will perform the way you intend for it. And really, that is all we can hope for.

About The Author:

Tim Van Milligan (a.k.a. "Mr. Rocket") is a real rocket scientist who likes helping out other rocketeers. He is an avid rocketry competitor and is Level 3 high power certified. He is often asked what is the biggest rocket he's ever launched. His answer is that before he started writing articles and books about rocketry, he worked on the Delta II rocket that launched satellites into orbit. He has a B.S. in Aeronautical Engineering from Embry-Riddle Aeronautical University in Daytona Beach, Florida, and has worked toward an M.S. in Space Technology from the Florida Institute of Technology in Melbourne, Florida. Currently, he is the owner of Apogee Components (http://www.apogeerockets.com) and also the author of the books: *Model Rocket Design and Construction*, *69 Simple Science Fair Projects with Model Rockets: Aeronautics* and

Continued on page 8

How to Ground Test a Dual Deployment Altimeter

Continued from page 7

publisher of the "Peak-of-Flight" newsletter, a FREE ezine newsletter about model rockets. You can email him by using the contact form at https://www.apogeerockets.com/Contact.

References:

Frequently Asked Questions About Dual Deployment Rockets - https://www.apogeerockets.com/education/downloads/Newsletter324.pdf

Build An Easy And Inexpensive Vacuum Chamber - https://www.apogeerockets.com/education/downloads/Newsletter256.pdf

Video: How to Determine Ejection Charge Size - https://www.apogeerockets.com/Advanced_Construction_Videos/Rocketry_Video_337

Video: Is Your Dual Deployment Altimeter Firing At The Correct Altitude? - https://www.apogeerockets.com/advanced_Construction_Videos/Rocketry_Video_94

Video: Setting up Dual Deployment Rockets - https://www.apogeerockets.com/Advanced_Construction_Videos/Rocketry_Video_26

YouTube Video of ejection charge test - https://youtu.be/vM8R2HJynQk

Chute Release or Dual Deployment? - https://www.apogeerockets.com/education/downloads/Newsletter575.pdf

An Inexpensive Method of Making Your Rockets Dual Deploy - https://www.apogeerockets.com/education/downloads/Newsletter258.pdf

Check out our Facebook page
www.facebook.com/ApogeeRockets

JOIN TRIPOLI.ORG
Mention Apogee Components

NEED A PARACHUTE?
APOGEE HAS THE ONE YOU'RE LOOKING FOR!
www.ApogeeRockets.com/Building-Supplies/Parachutes