PEAK OF FLIGHT NEWSLETTER

ISSUE 595 / MARCH 14TH 2023

IN THIS ISSUE

WHY YOU SHOULD NEVER JUDGE AN ENGINE BY ITS ENGINE CODE

Euler's Revenge

FREE PLAN

Available in This Issue!

https://www.apogeerockets.com/Peak-of-Flight-Rocket-Plans

www.ApogeeRockets.com
4960 Northpark Dr, Colorado Springs CO 80918
Ph# 719-535-9335

APOGEE COMPONENTS

PEAK OF FLIGHT

Why You Should Never Judge an Engine by its Engine Code

By Curtis Lee

For some people, choosing the right engine for a rocket is part of the fun. For others (especially beginners), it can be a confusing exercise that can lead to disappointment at the launch site. Regardless of which end of the spectrum you relate to, you can't deny how the nomenclature of model rocket engines isn't the most consistent.

A good example of this is whether they're called "engines" or "motors," but that's a topic for another time. In this article, we'll focus on how model rocket engines don't often perform the way their engine codes say they should. And we'll use the A10-3T and A8-3 Estes engines to help show this. But before we get to that, let's quickly review engine codes and what they mean.

Understanding Model Rocket Engine Codes

Most model rocket engine codes consist of three characters. We'll use a C6-3 engine to illustrate.

The first letter gives us an estimate of the total power of the engine. Specifically, it signifies the total impulse range of the motor. In the case of "A" engines, it will be between 1.26 Newton-Seconds and 2.50 Newton-Seconds. For "B" engines, its total impulse range is 2.51 to 5.00 Newton-Seconds. For "C" engines, its total impulse range is 5.01 to 10.00 Newton-Seconds.

The first number gives us the average thrust of the engine in Newtons. So using our C6-3 example, its average thrust is supposed to be 6 Newtons (more on this later).

The last character (the number following the dash) represents the delay time from burnout to the ejection charge. In our c6-3 engine example, it's three seconds. According to NFPA Code 1125 (Chapter 8.1.7), the actual time delay can vary up to 20% of the stated value, or 1.5 seconds, whichever is greater (but not to exceed 3 seconds). In plain English, this means the time delay number on an engine can be very different from the actual time delay when an engine is used in a rocket.

For instance, if an engine is supposed to have a 4-second time delay, as long as its actual delay is between 2.5 and 5.5 seconds, it complies with the NFPA code. It's hard to believe this is true, even though the actual time delay could be wrong by 37.5%. That's a pretty large margin of error, especially in the context of rocket science. If for no other reason, time delay value standards on model rocket engines serve as a great example of why we have to be careful when relying on engine codes to tell us exactly how engines should perform.

For a more in-depth look at engine codes and how model rocket engines are classified, please read Peak of Flight Newsletter Issue #486. And for a more in-depth look at why engine codes don't tell us the whole story, let's compare the Estes A8-3 and A10-3T engines using NAR test data (which is supposed to be retested and recertified every five years).

The Estes A8-3 Engine

The Estes A8-3 engine weighs around 16.5 grams. Using the standard convention for interpreting model rocket engine codes, the A8-3 engine (Figure 1) from Estes should have the following characteristics:

- A total impulse between 1.26 Newton-Seconds and 2.50 Newton-Seconds
- An average thrust of 8 Newtons
- A time delay between burnout and ejection charge of 3 seconds

FIGURE 1 - ESTES A8-3 ENGINE

Continued on page 3

About this Newsletter
You can subscribe to receive this e-zine FREE at the Apogee Components website www.ApogeeComponents.com, or by clicking the link here Newsletter Sign-Up

Newsletter Staff
Writer: Curtis Lee
Proofreader: Michelle Mason
Layout: Sky Luther

Why You Should Never Judge an Engine by its Engine Code

Continued from page 2

According to A8-3 Estes engine NAR test data from the NAR Standards and Testing Committee, the A8-3 has:

- A total impulse of 2.32 Newton-Seconds
- An average thrust of 3.18 Newtons
- A time delay between burnout and ejection charge of 2.25 seconds

The total impulse reading is what we would expect from the engine code, as is the time delay. But the average thrust is way off, with a reading of 3.18 Newtons when the engine code "says" it should have an average thrust of 8 Newtons. So the A8-3 should actually be called the A3-3 if we were to follow the applicable engine code interpretation convention.

Perhaps the Estes A8-3 is an outlier? Let's look at the Estes A10-3T mini engine to find out (spoiler alert: it's not an outlier).

The Estes A10-3T Engine

Unlike the Estes A8-3, the A10-3T is a mini engine, so it has a diameter of 13mm instead of 18mm (Figure 2). It weighs about 8.7 grams, so it's almost 8 grams lighter than the A8-3. According to its engine code, the A10-3T should have the following characteristics:

FIGURE 2 - ESTES A8-3 AND A10-3T ENGINES

- A total impulse between 1.26 Newton-Seconds and 2.50 Newton-Seconds
- An average thrust of 10 Newtons
- A time delay between burnout and ejection charge of 3 seconds

According to A10-3T Estes engine NAR test data from the NAR Standards and Testing Committee, the A10-3T actually has:

- A total impulse of 2.00 Newton-Seconds
- An average thrust of 2.35 Newtons
- A time delay between burnout and ejection charge of 2.35 seconds

The total impulse and time delay readings are within specifications. But as was the case with the A8-3 engine, the average thrust reading is way off. Instead of having an average thrust of 10 Newtons, the A10-3T has an average thrust that's only 2.35 Newtons. So applying the applicable engine code standard, the A10-3T should actually be called the A2-3T.

Why Are the A8-3 & A10-3T Estes Engine Codes "Wrong?"

To be clear, the A8-3 and A10-3T Estes engines aren't the only ones that have NAR test data that are inconsistent with the engine codes. For example:

- Estes C5-3 engines should have an average thrust of 5 Newtons, but NAR test data for the C5-3 engine

Continued on page 4

Why You Should Never Judge an Engine by its Engine Code

Continued from page 3

says it's only 3.91 Newtons.

- Estes C6 engines (with 0, 3, 5 and 7 second time delays) should have an average thrust of 6 Newtons, but the NAR test data for the C6 engines say it's only 4.74 Newtons.
- Estes B6 engines (with 0, 2, 4 and 6 second time delays) should have an average thrust of 6 Newtons, but the NAR test data for the B6 engines say it's only 5.03 Newtons.

This phenomenon doesn't just apply to Estes engines. Take the (discontinued) Quest C6-0. It was an 18mm black powder engine that should have an average thrust of 6 Newtons. But according to the NAR test data for the Quest C6-0, its average thrust was only 3.95 Newtons. So what's the explanation for this? There are at least two of them.

The first explanation applies to older engines that were named before the NAR motor labeling conventions were in effect. The Estes A8-3 engine is an example of this, so it's been allowed to keep its original name/engine code, even though it's now a "legacy" designation.

The second explanation comes from testing standards and rules from the NAR and the NAFPA 1125. According to Section 10.3 from NAR's Standards & Testing Committee Motor Testing Manual (Version 1.5), a motor's average thrust rating needs to be within 10% of the tested average thrust rounded to the nearest whole number.

Chapter 8.1.7 of the NFPA 1125 says that the "[a]verage thrust shall be within 20 percent [or 1 N (0.22 lbf), whichever is greater] of the average thrust that is computed by dividing the mean total impulse measured during propellant burn time by the mean propellant burn time." Yet this is an incomplete explanation because of how burn time and total impulse are measured.

In Chapter 7.8.3 of NFPA 1125, it says that the engine burn time doesn't start until the point where measured thrust rises above 5% of its eventual peak value. And the engine burn time is deemed to have stopped when the thrust falls below 5% of the peak thrust value.

Chapter 7.8.5 of NFPA 1125 says that when it comes to measuring total impulse, measurements won't begin until the thrust of the engine rises to 5% of that motor's eventual peak thrust. And thrust measurements won't end until "… the point of last measurable thrust prior to ejection…"

I'm not sure if the above explains any discrepancy between an engine's label and its NAR testing data, but I imagine it explains a lot. At the very least, it gives us a good look into the process of testing motors and certifying them and why how a motor performs in real life won't always match what its label says.

So What?

The Estes A8-3 and A10-3T engines have codes that don't follow the traditional engine code convention. Why does being aware of this matter? Beyond being an interesting talking point, it matters because anyone thinking about what engine to use in a rocket knows to pay more attention to NAR certification data and thrust curves then to engine codes.

For instance, if we take the engine codes of the A8-3 and A10-3T at face value, far fewer people would choose the A8-3 over the A10-3T. This is because with the A10-3T, you're "supposed" to have an engine that produces 25%

Continued on page 5

Why You Should Never Judge an Engine by its Engine Code

Continued from page 4

more average thrust, weighs almost 50% less, yet has the same total impulse.

We already looked at how the NAR test data differs from the engine code, so now let's take a look at the thrust curves of the Estes A10-3T and A8-3 engines (Figure 3):

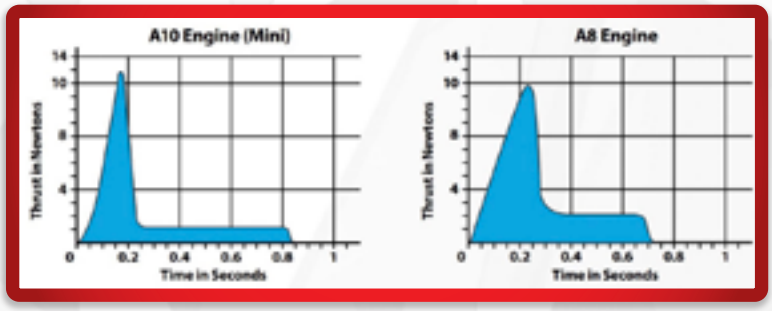

FIGURE 3 - THRUST CURVE GRAPHS FOR THE A8-3 AND A10-3T ROCKET ENGINE

Figure 3 (I made this graph using NAR RASP.ENG data originally intended for rocket simulators. The Y-axis is thrust in Newtons and the X-axis is time in seconds). See also: https://www.rocketreviews.com/compare-estes-a10t-to-estes-a8.html and https://www.thrustcurve.org/motors/compare.html?motors=5f4294d2000231000000000c&motors=5f4294d2000231000000000b

I made this graph to have both thrust curves on the same chart using the same scale and it's representative of the typical thrust curves for the Estes A8-3 and A10-3T engines. Also, keep in mind that the NAR-provided "Typical Thrust-Time Curves" aren't certified by the NAR. And if you're curious about Estes' thrust curves for these engines, check out Figure 4.

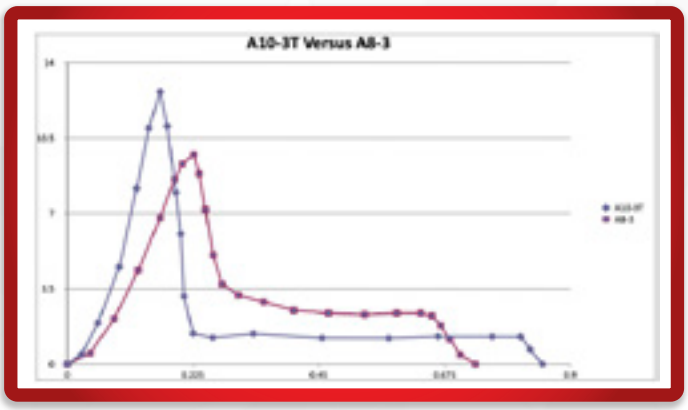

FIGURE 4 - ESTES' THRUST CURVES FOR THE A8-3 AND A10-3T ROCKET ENGINE

So what can we glean from the thrust-curve charts? It depends on what you need either engine to do. If you want to launch a rocket that's on the heavier side or you have a rocket that doesn't have as much separation between its center of gravity and center of pressure as you'd like, perhaps the A10-3T should be your choice to give you that greater initial "oomph" off the launchpad.

In addition to the greater peak thrust, it's also about 8 grams lighter. This is weight at the very bottom of the rocket, so that's helpful for improved stability. Even if you used a 13mm to 18mm adapter (which may weigh about 4.5 grams), you're still coming out ahead in the weight and stability department. But for a high-drag rocket that's lighter in weight, maybe the A8-3 might be a better choice in certain situations.

Another difference between the two is that the A10-3T engine is usually cheaper than the A8-3. Depending on the retailer, a pack of 13mm Estes engines is the same price as a pack of 18mm engines. But you get 4 x 13mm engines instead of 3 x 18mm engines. So for launching on a budget, the A10-3T mini engines are a great alternative to the A8-3.

Okay, enough theory and armchair rocketry. How do the A8-3 and A10-3T engines compare in the real world?

Parameters for Comparing Estes A8-3 & A10-3T Engines

Before we get to the data, let me explain the equipment used for comparing these engines. For the rocket, I used Apogee's Apprentice (Figure 5).

It was built largely stock, but had the following modifications or additions:

FIGURE 5 - THE APPRENTICE ROCKET BY APOGEE

Continued on page 6

Why You Should Never Judge an Engine by its Engine Code

Continued from page 5

- 3x3 Dinochutes parachute protector.
- When launching with the A10-3T, I used an Estes 13mm to 18mm adapter (which weighs 4.5 grams).
- The parachute size was reduced from 12" to 10" and it had a 6cm spill hole cut into it.
- The liberal use of stainless steel snap swivels (Figure 6).

FIGURE 6 - JOLLY LOGIC'S ALTIMETERTWO CONNECTED TO THE NOSE CONE VIA STAINLESS STEEL SWIVELS

For data gathering, I used Jolly Logic's AltimeterTwo, which was protected in a cotton cloth pouch I made (Figure 7).

FIGURE 7 - JOLLY LOGIC'S ALTIMETERTWO, PARACHUTE PROTECTOR, AND NOSE CONE ALL CONNECTED TOGETHER

The ready-to-fly weight of the Apprentice with an A8-3 engine and the Jolly Logic AltimeterTwo (and cloth case) was 75.9 grams.

The ready-to-fly weight of the Apprentice with an A10-3T engine, the Jolly Logic AltimeterTwo (and cloth case) and Estes 13mm to 18mm engine adapter was 72.6 grams.

The Apprentice weighed 46.4 grams without an engine or the Jolly Logic AltimeterTwo. Yes, it's a heavy rocket.

The launch pad was an Estes Porta-Pad II and the launch controller was an Estes Electron Beam Launch Controller - (Figure 8).

FIGURE 8 - ESTES PORTA-PAD II WITH LAUNCH CONTROLLER

Launch conditions: All launches tookplace between 8:30 and 9:30am (local time) with an ambient temperature of about 77 degrees Fahrenheit and a relative humidity of 51%. There was an occasional slight breeze coming from the west at less than 5 miles per hour.

The goal was to launch each engine 3 times and

Continued on page 7

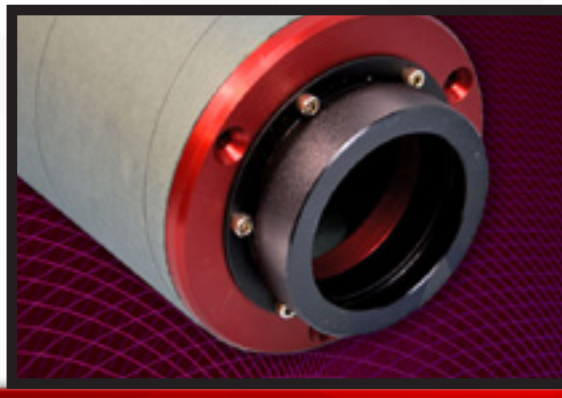

EXPERIENCED HPR BUILDERS USE THRUST PLATES

- Eliminates Shear Forces on Centering Rings
- Mates with AeroPacks Flanged Engine Retainers
- Fits Standard HPR Tubes, Blue Tubes, and Fiberglass Tubes
- Made from Aircraft Grade Aluminum

https://www.apogeerockets.com/Building_Supplies/Thrust_Plates

Why You Should Never Judge an Engine by its Engine Code

Continued from page 6

average the Jolly Logic AltimeterTwo's data. I was able to do this with the A8-3, but not the A10-3T.

Even though the A10-3T launches occurred just fine (although there were some issues with ejection), only one of the A10-3T launches provided usable data. The altimeter didn't register any data with the other launches with the A10-3T engine (did 4 total launches with the A10-3T).

Between launches, nothing was done to the Apprentice rocket beyond blowing out any loose bits of ejection charge debris from the main body tube.

Estes A8-3 and A10-3T Flight Data Compared

After three launches, the A8-3 engine and Jolly Logic AltimeterTwo produced the following data (averaged data from 3 flights):

Apogee Altitude	**91 feet** (max = 107 ft, min = 75 ft)
Top Speed	**53 miles per hour** (max = 56 mph, min = 50 mph)
Burn Time	**0.60 seconds** (max = 0.62 sec, min = 0.58 sec)
Peak Acceleration	**12.8 Gs** (max = 12.9 G's, min = 12.7 G's)
Average Acceleration	**4.1 G's** (max = 4.4 Gs, min = 3.7 Gs)

After just one launch, the A10-3T engine and Jolly Logic AltimeterTwo compiled the following data:

Apogee Altitude	91 feet
Top Speed	37 miles per hour
Burn Time	1.22 seconds
Peak Acceleration	14.1 Gs
Average Acceleration	1.7 G's

It's hard to compare these numbers given the fact that I had 3 launches with the A8-3 and just one with the A10-3T that resulted in data. But if we assume the data from the one A10-3T launch is valid, then it looks like it will provide comparable performance to the A8-3.

Most of the A10-3T data looks right, although the burn time seems a bit high and the average acceleration seems a bit low. My guess is that the AltimeterTwo went long with the burn time which in turn led to lower average acceleration.

While I expected the A10-3T to perform better than the A8-3 (and perhaps it did, we'll never know), I'm guessing the weight savings by using an A10-3T versus the A8-3 was minimized given how heavy my Apprentice was.

Based on my subjective observations, the launches between the A8-3 and A10-3T engines were comparable. However, I noticed that the A10-3T engines had more trouble getting a full ejection. What often happened with the A10-3T launches was that the nose cone and altimeter ejected just fine, but the parachute and/or reusable wadding remained inside the main body tube.

This isn't to say these mini engines were faulty. But the altimeter (with its cloth protective case), parachute and reusable wadding (which is far stiffer than Estes disposable wadding) produced a fair amount of friction in the BT-50 main body tube of the Apprentice that I think required a stronger ejection charge that only the 18mm A8-3 could provide consistently.

Closing Thoughts

For many conventional low power rockets, the Estes A10-3T will serve as an interchangeable replacement for the Estes A8-3 (from a performance standpoint). Just make sure your recovery system has as little binding or friction as possible. But the biggest benefits of the A10-3T are that it's cheaper and lighter than the A8-3 (even with an adapter's weight factored in).

Continued on page 8

MINIMUM DIAMETER MOTOR RETAINERS!

Apogee is your one stop shop for your minimum diameter rocket projects!

- Fly High
- Fly Fast
- Impress Your Friends!

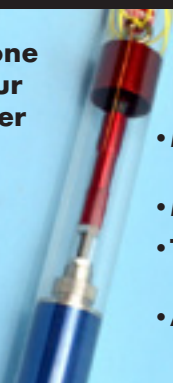

WE HAVE:

- Minimum Diameter Retainers
- Motor Extenders
- Threaded Forward Closures
- Adapters for Cesaroni Cases

www.ApogeeRockets.com/Building_Supplies/Motor_Retainers_Hooks

Why You Should Never Judge an Engine by its Engine Code

Continued from page 7

As for engine codes, they will often not be an accurate representation of an engine's performance. This is most likely due to the nuances in how they're tested and certified or because their engine code names have been grand-fathered in from a time when today's NAR motor labeling conventions didn't apply.

If you want to know exactly how an engine performs, use its engine code as a very rough guideline, then look at its thrust curve and test data to confirm it will give you the performance you need. Before reading this article, most of you probably already knew this. But now you hopefully have a better idea as to why this is the case.

About the Author:

Curtis Lee recently rediscovered his interest in model rockets. He now enjoys reliving his childhood by building and designing low-power rockets with his son. When he's not working on rockets, you can find him spending time with his family, metal detecting or restoring old-school video game systems.

Euler's Revenge Plan

Euler's Revenge Parts List

Part # - (Purchase Quantity) Part Description - Required from Pack

10100 - (1) 24mm x 18" Body Tube (BT-50) - 3.75" required
10141 - (1) 41.6mm x 18" Body Tube (Estes BT-60 size) - 2 tubes required
10220 - (1) AT-98/18" Airframe Tube Set - a section of one tube required
12261 - (1) Coupler Bulkhead Disk 41.6mm (BT-60)
13019 - (1) AC-41.6 (BT-60) Coupler - 1 required
13032 - (1) Centering Ring 18mm to 24mm - 1 required
13037 - (1) Centering Ring 24mm to 29mm - 2 required
13057 - (1) 1/4"x3" Launch Lug - 1 launch lug required
13405 - (1) Centering Rings 24mm to 33mm (BT-55) - 1 required
14092 - (1) Basswood Sheet - 1/8" X 3" X 18"
15016 - (1) Centering Ring 24mm to 41.6mm (BT-60) - 2 required
20069 - (1) PNC-41.6/BT-60 and BT-60 to BT-55 Transition
24045 - (1) Engine Hook Assortment -1 regular size hook required
29126 - (1) 12"/15"/18" cut-to-size plastic parachute (18")
30326 - (1) 300# Kevlar x 7 feet
- ( ) Printer Paper for Templates

Order parts at: https://www.apogeerockets.com/Quick_Order
RockSim file and Decals: www.apogeerockets.com/downloads/rocksim_files/Eulers-Revenge.zip

Recommended Motors (Simulated at empty weight of 124g):
Estes C11-3 - 297' (90m)
Estes D12-3 - 616' (188m)
Quest D22W-4 - 714' (218m)
Aerotech D15-4 - 731' (223m)
Aerotech E20W-4 - 1143' (348m)

Euler's Revenge *By Martin Jay McKee*

Introduction

On this most auspicious of math holidays[1] (Pi Day, 3/14, in the American order), we thought it would be fun to come up with a math related rocket. The result – Euler's Revenge – is a unique rocket with a payload bay, a boat tail, elliptical fins, and a ring tail. More than that, however, we've hidden a number of interesting math based Easter eggs in the design. But before we get to that, it seems only right to introduce the rocket's namesake.

[1] In 2009, the U.S. House of Representatives officially declared that March 14th was a national holiday – Pi Day.

Continued on page 10

Euler's Revenge Plan

Continued from page 9

Leonhard Euler (Leh-ohn-hahrd Oil-ah) was a Swiss 18th century polymath (primarily working in mathematics, physics and philosophy) that made advancements in dozens of different areas, including almost all areas of mathematics known at the time. Euler made advances in geometry, number theory, calculus, trigonometry and algebra. On Pi Day though, perhaps the most appropriate contribution by Euler that we might highlight is the fact that he made the use of the Greek letter **π** (pi) the standard notation for referring to the ratio between the circumference and diameter of a circle. Prior to Euler, a great variety of notations had been in use and without his preeminence as a trend-setting mathematician, Pi Day wouldn't even exist. Euler did much more that had a deep impact on the course of mathematic exploration however. For instance, Euler solved the Basel problem, a problem in analysis that sought to determine the exact value of an infinite series of the reciprocals of the squares.

That is, the goal was to find the value of the equation[2], $\sum_{k=1}^{\infty} \frac{1}{k^2}$. This is an infinite series and merely adds the components (in this case $\frac{1}{k^2}$, for every value of k greater than or equal to 1) together to produce a value. The solution, Euler found, contains that same sneaky constant that Pi Day celebrates. Indeed, he found that $\sum_{k=1}^{\infty} \frac{1}{k^2} = \frac{\pi^2}{6}$. A very strange result indeed! One could use the Basel equation to calculate an approximation of the value of pi, though it's not a very efficient way to do it. A complete history of Euler's contributions to math and science spans multiple books; so we shall have to leave more exposition for another time. Nevertheless, hopefully it is clear that Leonhard Euler is entirely justified as a mathematical inspiration for a rocket on a day such as today.

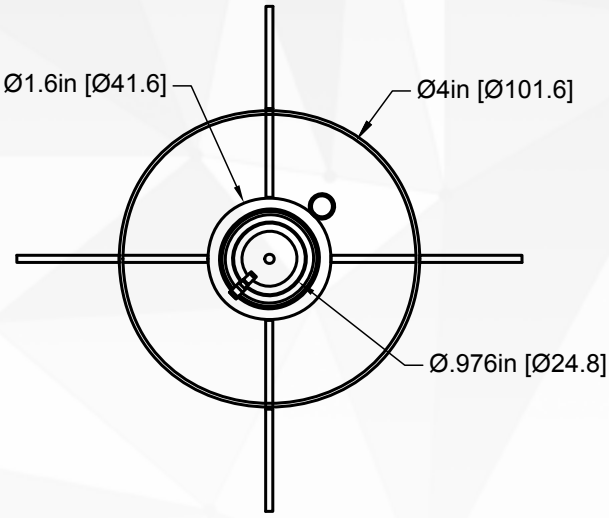

Since it is based on transcendental numbers[3], Euler's Revenge cannot actually be built as designed. It can only be approximated (to any level of precision one might like, however). The lengths of the two body tube sections are based on the fundamental constants **π** (of course) and **e** (Euler's Number). Meanwhile, the dimensions of the fins are based on the same constants in addition to **φ** (fi, the Golden Ratio). There are multiple additional mathematically related dimensions in Euler's Revenge, but what would be the fun if I pointed them all out? Perhaps the recreational mathematicians out there can find them.

In the end, this is a rocket that contains lots of fun features and that flies straight as an arrow on D and E class motors (despite moderately high winds at our test launch). What more could one want?

---

[2] The equation that Euler solved for the Basel equation is a specific form of the generalized zeta (**ζ**) function that is at the core of the famous Riemann Hypothesis which is one of the seven Millenium Mathematics problems which, if solved, carry an award of $1 million.

[3] Transcendental numbers are a very specific type of number that are defined as numbers that are never the solutions to polynomial equations with rational coefficients. One thing that is interesting about transcendental numbers, however, is that they are irrational. That is, they cannot be represented as a fraction and they have a decimal expansion that continues forever. As such, it's not possible to write transcendental numbers exactly. Nor, of course, would it be possible - even in theory - to measure a physical item to such a length.

Continued on page 11

Euler's Revenge Plan

Continued from page 10

Notes on cutting out the fins:

Perhaps the most difficult part of construction is actually cutting the fins out as designed. They are designed to be constructed out of basswood and contain a slot for mounting the ring fin. Given the density of basswood, it is more difficult to cut than balsa. Balsa would also result in a sturdy rocket, so substituting that in would be feasible. However, once the outer border of the fin is cut out, it is easy to cut the slots using a razor saw or hacksaw. Simply cut along the inner and outer lines. Once cut, the slots can be cleaned up with sandpaper.

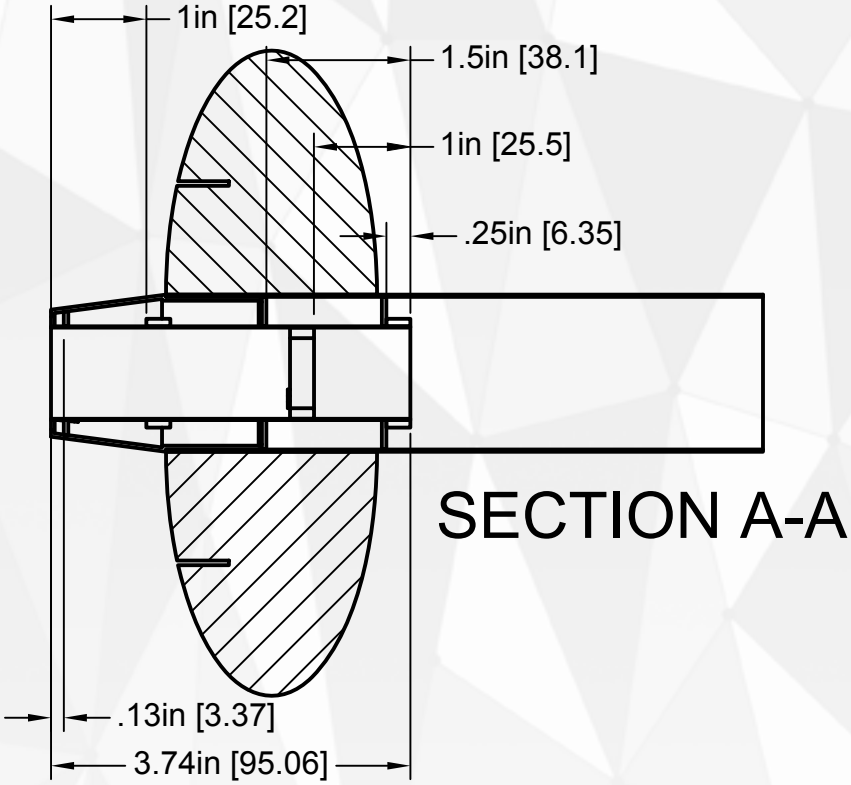

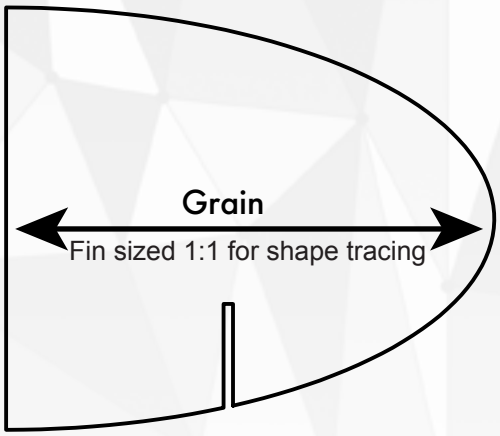

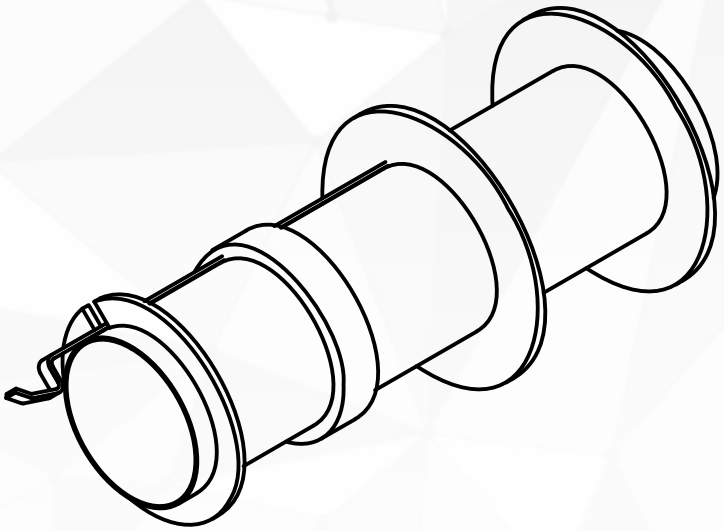

Notes on the motor mount:

Fitting the motor mount into the boattail requires a few more rings than is typical. It also requires notching the furthest aft ring and the boat tail to provide clearance for the motion of the motor hook. The boat tail comes as a transition with shoulders on both ends and requires the forward shoulder to be cut down and the aft shoulder to be cut off entirely. There are groves molded into the transition to make a straight cut easy and either a hobby knife or razor saw will make quick work of separating the parts.

Continued on page 12

Euler's Revenge Plan

Continued from page 11

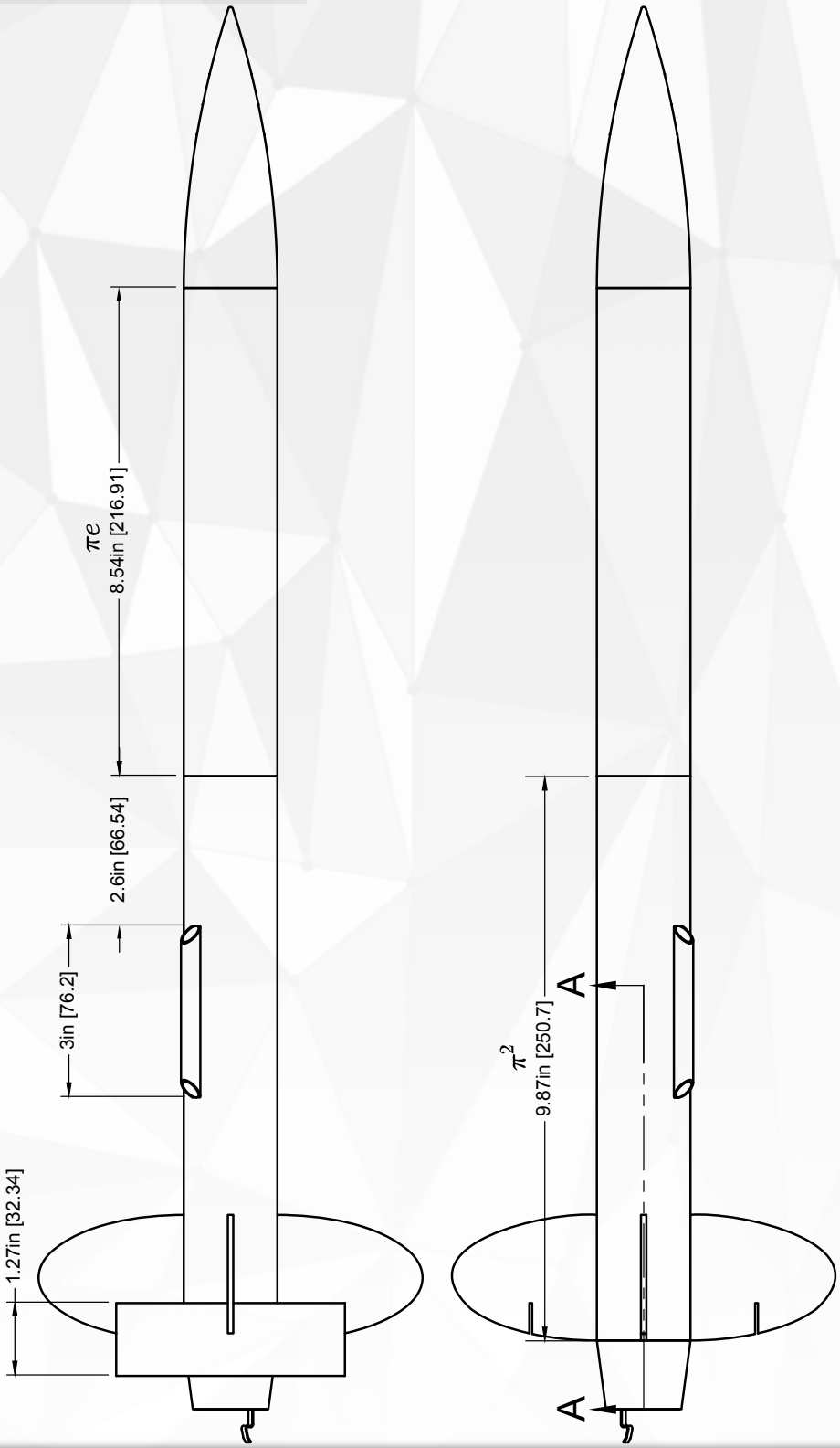

Continued on page 13

Decal Sceet 1 of 2

Fin decals should be printed on clear to allow the color to show through. Wrap should be on white for best result.

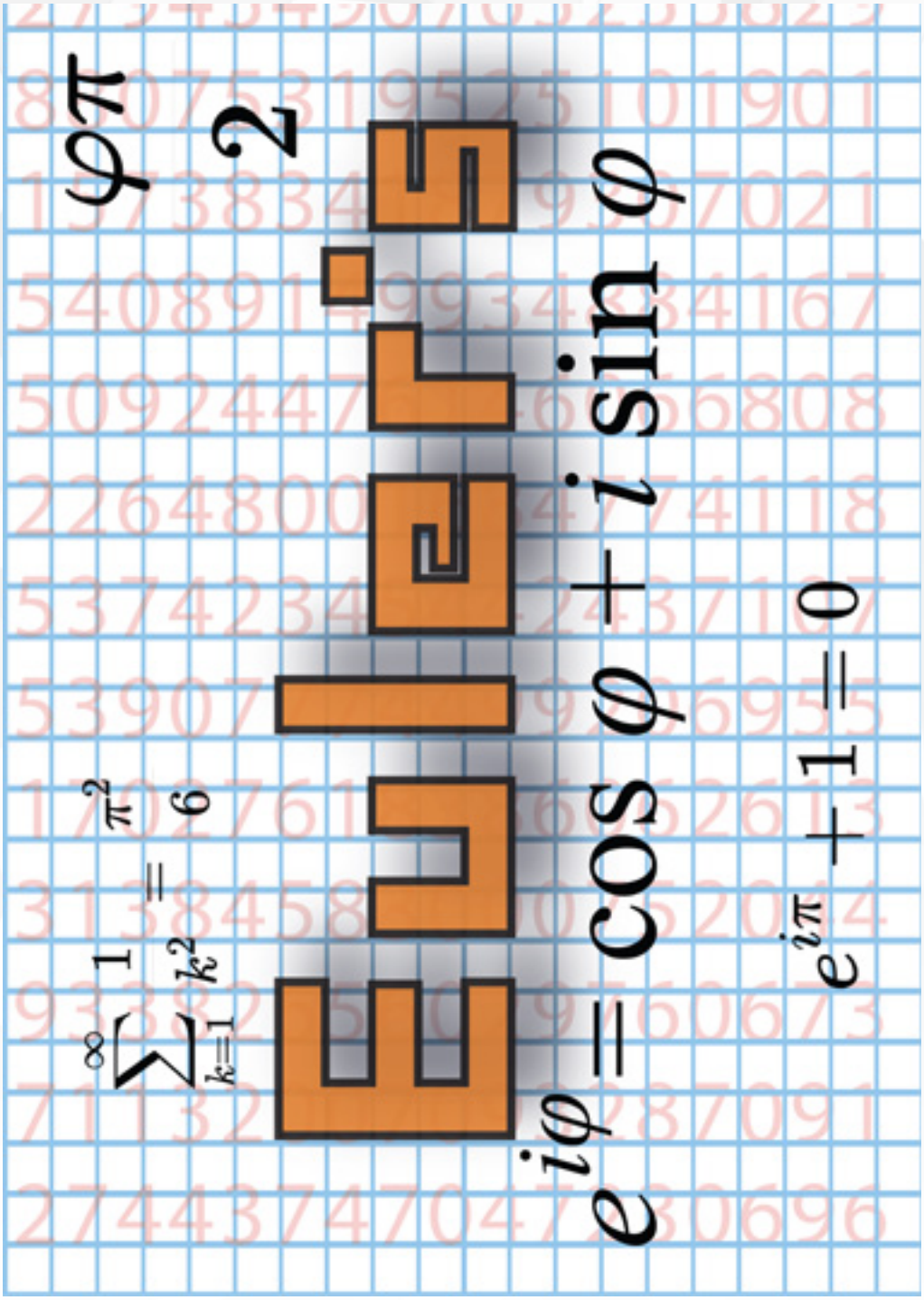

This decal is a full body wrap

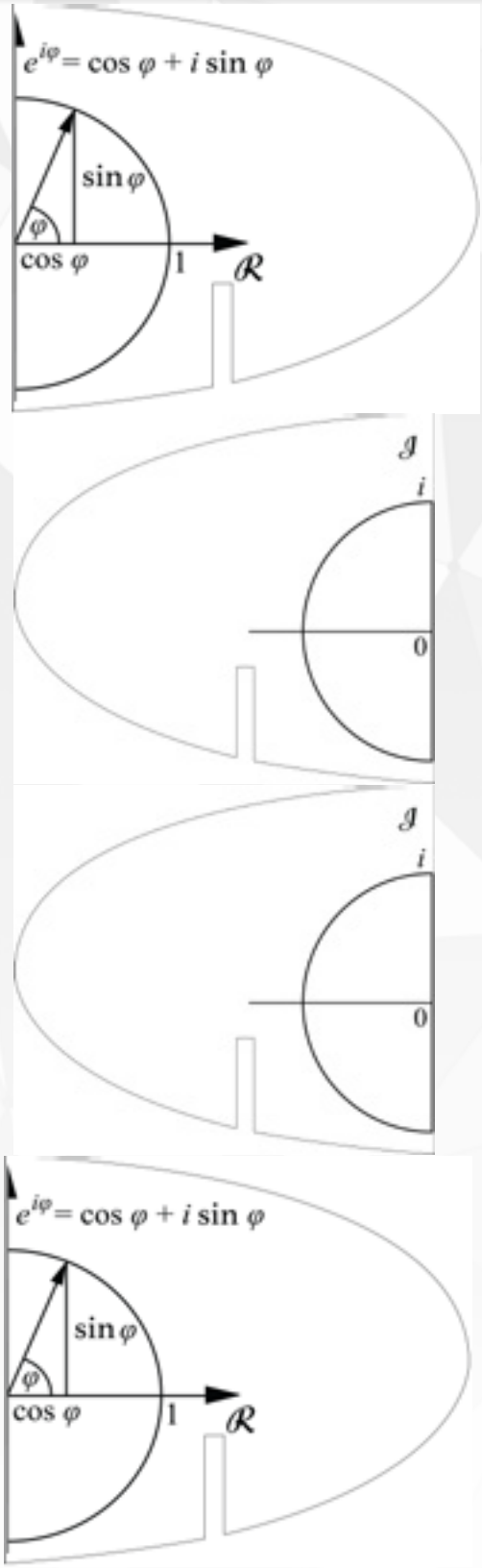

Continued on page 14

Decal Sceet 2 of 2

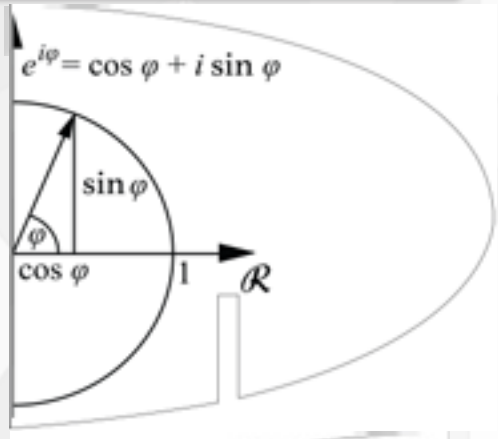

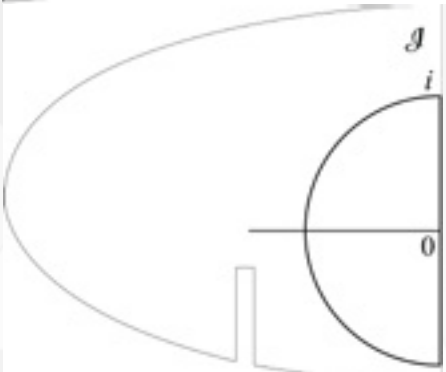

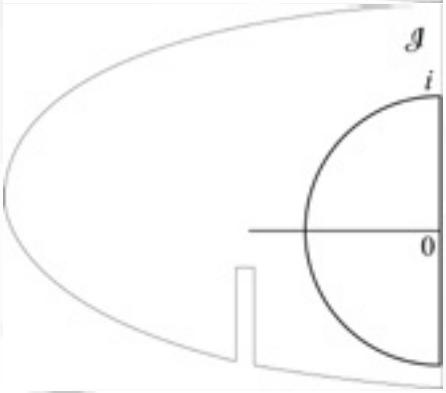

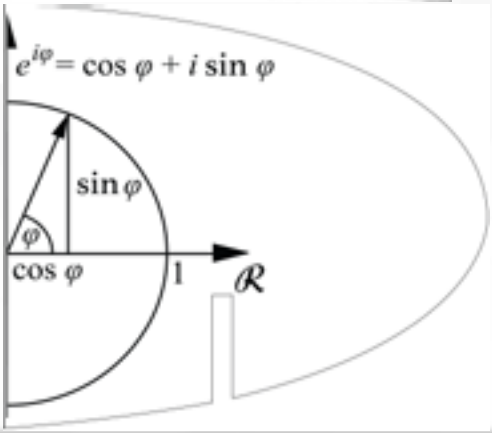
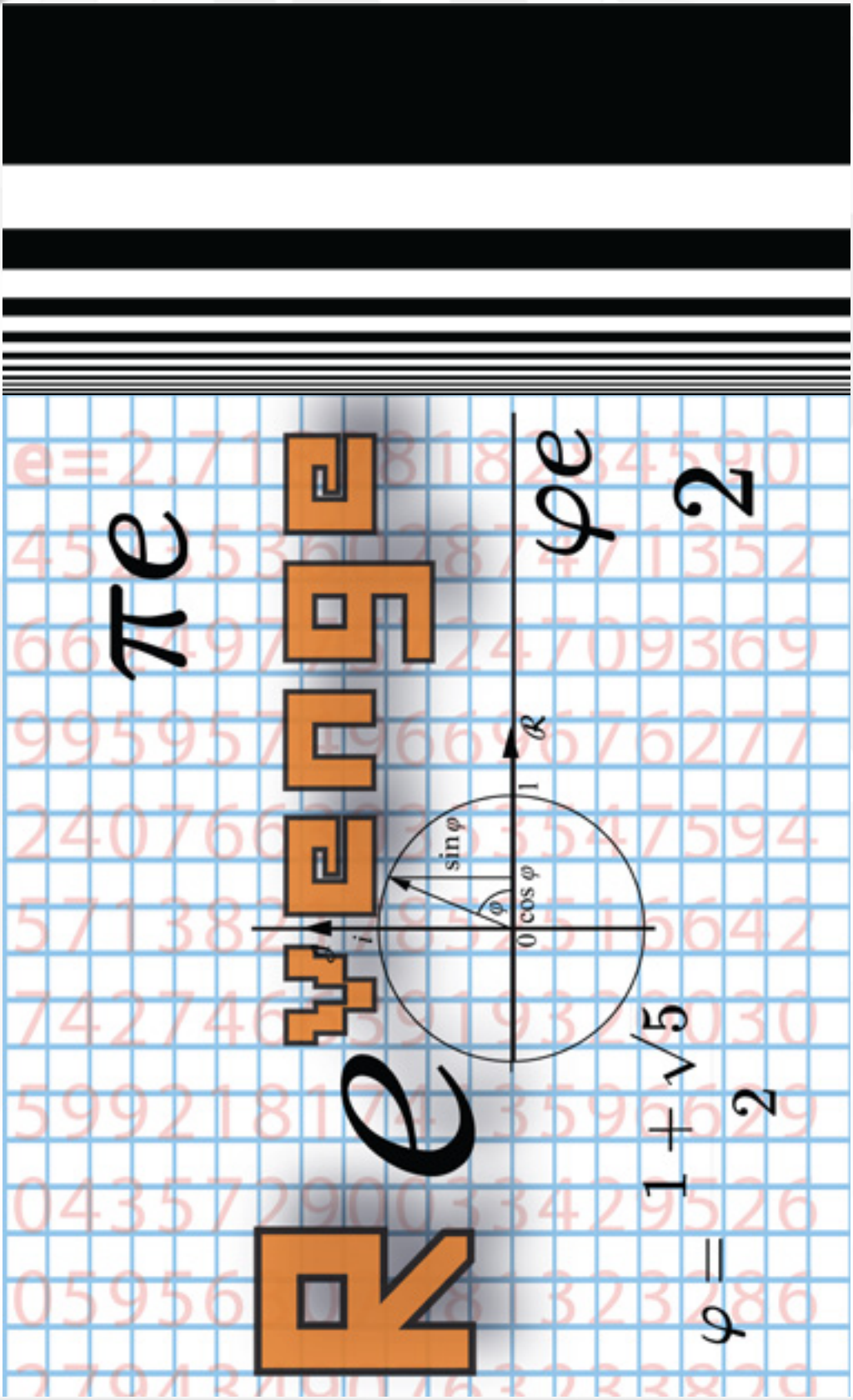
This decal is a full body wrap