# PEAK OF FLIGHT NEWSLETTER

ISSUE 599 / MAY 5TH 2023

## IN THIS ISSUE

### HOW TO DESIGN AIRBRAKES IN A SOUNDING ROCKET

Eiffel Tower

**FREE PLAN**

Available in This Issue!

https://www.apogeerockets.com/Model-Rocket-Kits/Skill-Level-1-Model-Rocket-Kits/Wayfarer

www.ApogeeRockets.com
4960 Northpark Dr, Colorado Springs CO 80918
Ph# 719-535-9335

APOGEE COMPONENTS

PEAK OF FLIGHT

# How to Design Airbrakes in a Sounding Rocket

## By ThrustMIT

### Introduction

In this article, we will be showcasing a simple, low-cost approach to designing an airbrake system. This system helps in slowing down and controlling the coasting ascent of the rocket in order to achieve a specific altitude. It consists of radially deploying flaps that are controlled by a servo motor. The system uses a 4th-order Runge-Kutta method to constantly predict apogee, which is the basis on which a closed loop control system actuates the servo.

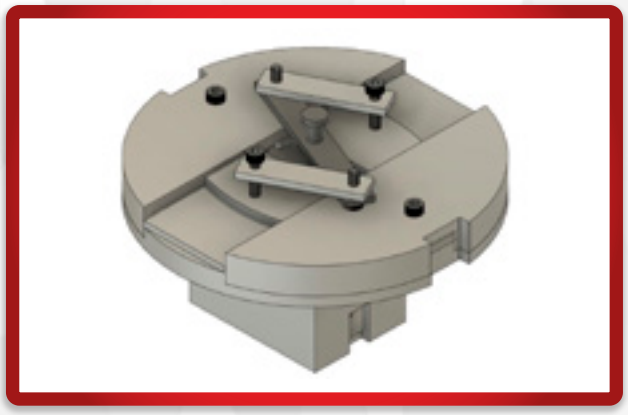

FIGURE 1: AIRBRAKE SYSTEM (STOWED)

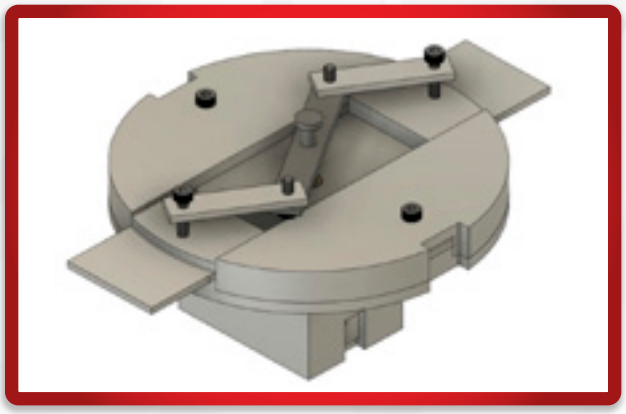

FIGURE 2: AIRBRAKE SYSTEM (DEPLOYED)

### Components Used

The air brakes are made of aluminum and are designed to withstand the high forces experienced during the coasting ascent phase of the rocket's flight. Each brake has an area of 2 square inches, and the total drag experienced by each brake is around 8N. Stiffness and strength simulations and hand calculations have been performed, with a maximum deflection of 0.13mm. The mechanism is based on the slider crank mechanism powered by a servo motor, and it includes a spring retraction mechanism to prevent the brakes from opening during the powered phase of the rocket.

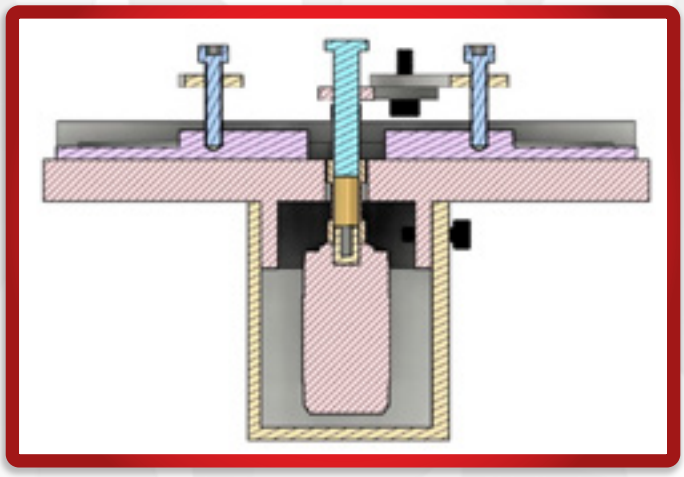

FIGURE 3: SECTIONAL VIEW OF THE MECHANISM

The air brakes have been provided with certain boundary conditions to prevent mishaps and mid-flight tilting/toppling.

As for the electronics, all the computing is done through the flight controller. The microcontroller used is the Teensy 4.1, which has been chosen for its high computational power and ability to support all required peripherals. (https://www.pjrc.com/store/teensy41.html)

The sensor suite includes:

1. MPU6050 is an IMU which provides us with X, Y, and Z acceleration. (https://invensense.tdk.com/wp-content/uploads/2015/02/MPU-6000-Datasheet1.pdf)

Continued on page 3

**About this Newsletter**

You can subscribe to receive this e-zine FREE at the Apogee Components website www.ApogeeComponents.com, or by clicking the link here Newsletter Sign-Up

**Newsletter Staff**

Writer: ThrustMIT
Proofreader: Michelle Mason
Layout: Sky Luther

# How to Design Airbrakes in a Sounding Rocket

Continued from page 2

2. BMP388 is a static pressure sensor and acts as the primary altimeter. (https://www.bosch-sensortec.com/media/boschsensortec/downloads/datasheets/bst-bmp388-ds001.pdf)

3. MPX5100DP is a differential pressure sensor and is used to measure the velocity of the rocket using Bernoulli's principle. (https://www.nxp.com/docs/en/data-sheet/MPX5100.pdf)

The MG996 high-torque servo motor is the chosen actuator for the airbrake control system due to its ability to deliver output torque while operating at lower power requirements.

## Assembly

The shaft of the armature is slid through the circular plate and the motor is bolted onto the shaft using a coupler.

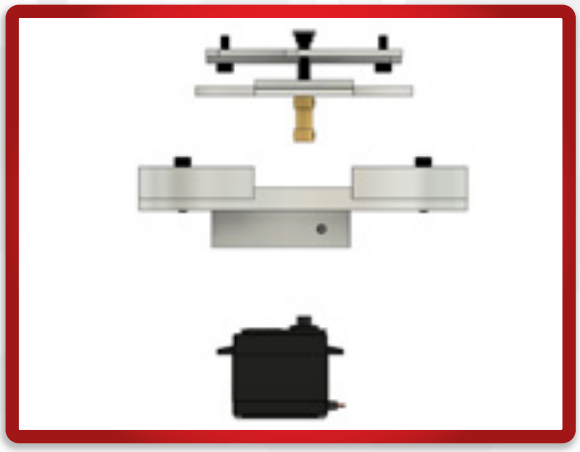

FIGURE 4: CONNECTING MOTOR AND ARMATURE SHAFT

The motor housing is then bolted onto the circular plate.

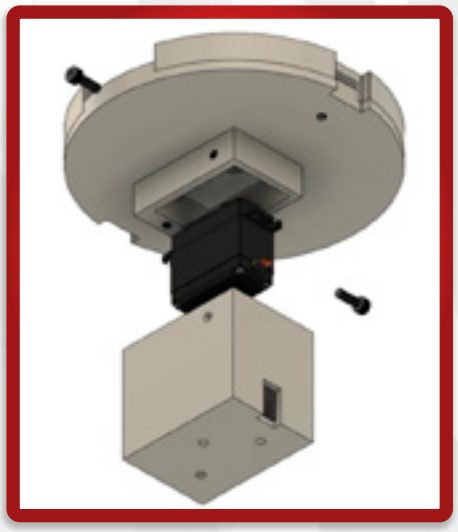

FIGURE 5: SECURING SERVO MOTOR MOUNT TO THE TOP PLATE

The motor is then secured into the whole assembly using three screws bolted from underneath.

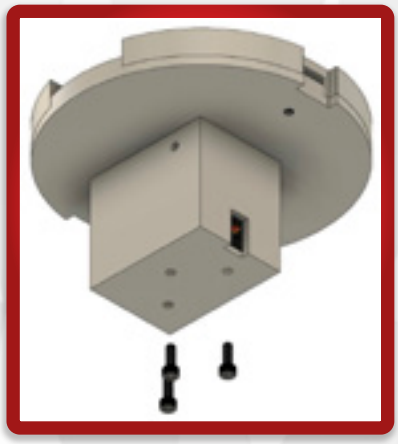

FIGURE 6: SECURING SERVO MOTOR TO THE MOUNT

## Code

The airbrake code encompasses several functions that enable the system to accurately predict the apogee, and calculate drag, monitor the rocket phase, control the servo motor, and access predefined lookup tables for aerodynamic analysis.

Continued on page 4

Check out our Facebook page
www.facebook.com/ApogeeRockets

# How to Design Airbrakes in a Sounding Rocket

Continued from page 3

A 4th-Order Runge-Kutta method is used to predict the rocket's altitude and velocity at set intervals.

$$K_1 = hf(x_n, y_n)$$
$$K_2 = hf(x_n + \frac{h}{2}, y_n + \frac{k_1}{2})$$
$$K_3 = hf(x_n + \frac{h}{2}, y_n + \frac{k_2}{2})$$
$$K_4 = hf(x_n + h, y_n + k_3)$$
$$y_{n+1} = y_n + k_1/6 + k_2/3 + k_3/3 + k_4/6 + O(h^5)$$

FIGURE 7: 4TH-ORDER RUNGE-KUTTA

The drag calculator function computes the drag at various phases of flight utilizing the look-up tables provided.

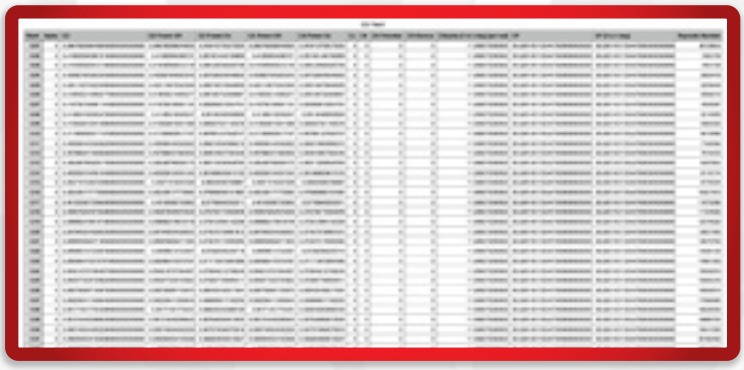

FIGURE 8: CLIP FROM EXCEL TABLE WITHOVER 105,000 DATA POINTS

The phase check function detects the coasting phase of the rocket, to prevent the deployment of airbrakes during the boost phase.

The look-up tables have been obtained through CFD models and FEA simulations that give us the corresponding drag coefficients and stress figures for various phases and angles of attack.

The following safety checks have also been put in place to prevent unwanted deployment:

1. A virtual floor of 5000ft has been set. The rocket might experience a sudden change in attitude during and after the boost phase, and the deployment of the airbrakes may lead to catastrophic failure.

2. Opening of air brakes only if the velocity is less than 80 m/s, a limit set through aerodynamic constraints and analysis to maintain the stability and attitude of the rocket.

**About Author**

We are thrustMIT, a pretty awesome and cool student project based in Manipal Institute of Technology, Manipal. Our mission to advance high power rocketry in India began with seven crazy rocket enthusiasts in the year 2016. We are proud to say that today we are first in India and third in Asia according to Spaceport America Cup standards which is the competition we take part in annually.

# Eiffel Tower Plan

### *Eiffel Tower Parts List*

10100 - (1) 24mm x 18” Body Tube (BT-50) - 10”
10111 - (1) 29mm x 13” Body Tube - 1 tubes
13009 - (1) AC-24B (BT-50) Coupler
13037 - (1) Centering Ring 24mm to 29mm - 2 required
13057 - (1) 1/4”x3” Launch Lug - 1 launch lug required
29126 - (1) 12”/15”/18” cut-to-size plastic parachute (18”)
30326 - (7 ft) 300# Kevlar
- (6) Printer paper for templates
- (2) Cardstock for surface details
- (2) Readi-Board Foam Core Board
- (14) Full-sheet Adhesive Paper for Decals

Order parts at:
https://www.apogeerockets.com/Quick_Order

**Recommended Motors** (empty weight of ~260g):
Aerotech F52-5C 150’ (45.7 m)
Aerotech F67W-4 146’ (44.5 m)
Aerotech G40W-4 256’ (78.0 m)
Aerotech G74W-4 180’ (54.9 m)

Download the **RockSim** design file for the Eiffel Tower at:
https://www.apogeerockets.com/Peak-of-Flight-Rocket-Plans

## The Eiffel Tower By Martin Jay McKee

**Introduction:**

The first week I started my position here at Apogee Components, Tim asked me to produce a plan rocket for Peak of Flight. The first idea I had was a cardstock Eiffel Tower. I ended up deciding upon the Dolphin that was published in Peak of Flight #580 (https://www.apogeerockets.com/Peak-of-Flight/Newsletter580) but the idea of an Eiffel Tower remained on my mind. When our new graphic designer began toward the beginning of this year we were discussing different rocket ideas, he mentioned that it would be cool to make the Eiffel Tower rocket fly higher than the real Eiffel Tower is tall. I was more convinced than ever that that would be a wonderful challenge. The result of my work (thus far!) is this foam core board rocket. My first step was to track down a 3D model [2]. This acted both as inspiration (sitting on my desk while I considered how to create the rocket in my head) and it was used to estimate the center of pressure (CP). Since I seem to like overthinking everything, I ran CFD on the model and calculated the CP directly. Unsurprisingly, the results were that the rocket should be extremely stable.

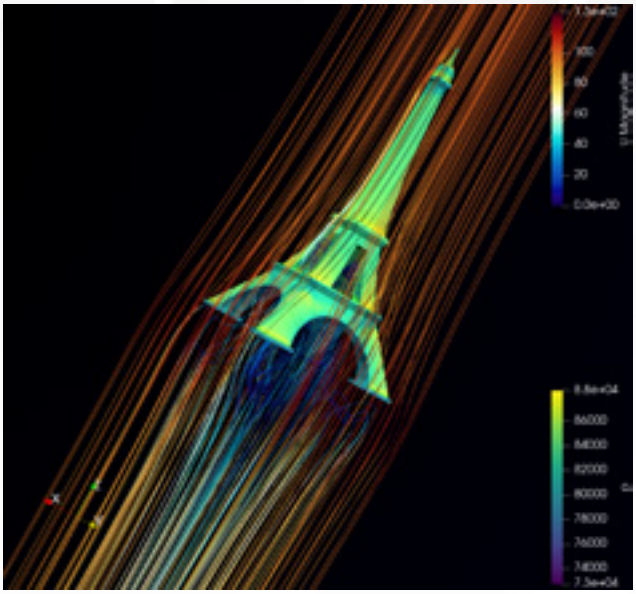

Continued on page 6

# Eiffel Tower Plan

Continued from page 5

Step two was to find some good drawings of the Eiffel Tower for dimensions [1], and combining measurements of the drawings I found with measurements from the model, I was able to draw up the parts and get building.

To build your own, you'll need to print out and assemble the paper templates. The templates are designed to be printed on standard letter paper. The only thing to watch out for is that they are printed at "actual size" or 100% as sometimes the computer will try to scale them slightly. Once the templates are assembled, they can be traced onto foam core board and cut out with a hobby knife. The two main decks are constructed of cardstock and two of the related sheets will need to be printed. All of the deck parts should be cut out and folded with the marking on the inside. Each deck can then be assembled – using the tabs on the short ends – to produce a ring. This ring will be glued onto the assembled tower. The nose cone needs to be 3D printed but it is a fairly easy print and it can be printed with minimal infill. Finally, if it is desired to use the full graphics, all the decals should be printed on full-sheet adhesive paper.

Assembly of the tubes and rings of the internal structure is most easily done with wood glue, but the remainder of the assembly can very easily be done with hot glue. This is not an expensive or difficult rocket to build, but it is a bit strange if you aren't used to the materials or processes, so it might make sense to take some time.

In the end, the launch tests of the prototype were highly successful and this is a rocket that I intend to continue developing… not the least of which that I wasn't anywhere close to getting it up to the height of the actual Eiffel Tower! As it happens, while my CFD did an excellent job estimating the stability properties of the rocket, it greatly underestimated the drag and, as such, flights were about 1/3 the altitude that was estimated. No doubt it's a show stopper, and loads of fun regardless.

**Files to Download:**
In the downloadable zip file, there are three files that are needed to build the Eiffel Tower, which you can get here:
https://www.apogeerockets.com/downloads/rocksim_files/Eiffel-Tower.zip

- Eiffel_Tower_Parts.pdf – which contains templates for the foam parts and the cardstock parts
- Eiffel_Tower_Decals.pdf – which contains the graphics for the finished rocket
- Eiffel_Tower_Nosecone.stl – which is the 3D printing file to create the nose cone

There is no RockSim file for this rocket.

**Notes on the Main Skin:**
Foam core board is a forgiving material to work with that is easy to cut and easy to glue. There are some techniques used in this build that are pretty typical of the foam "park flyer" R/C planes that are widely built. The most important are removing the paper from one side of the foam and beveling the edges. Removing the paper allows the foam to bend easily which allows assembly of the rocket with the gentle curves indicative of the Eiffel Tower. Removing the paper also prevents creases while the shape is being formed. Also, because the foam is a rather thick material (5mm / 3/16"), beveling the edges allows for a larger gluing surface and makes it much easier to join the corners cleanly.

Continued on page 7

# Eiffel Tower Plan

Continued from page 6

The main sides are large enough that they cannot be cut out of a single sheet of foam core board, so they are made in two pieces that must be glued together before the rocket is assembled.

To assemble the main tower, it is easiest to start with the four fully-assembled sides that are beveled along the long edges with the interior paper removed. Then, in sections beginning at the top of the tower, glue the four sides together by applying glue to a short section and taping the four sides together to hold the proper shape as the glue sets. Continue the entire height of the tower.

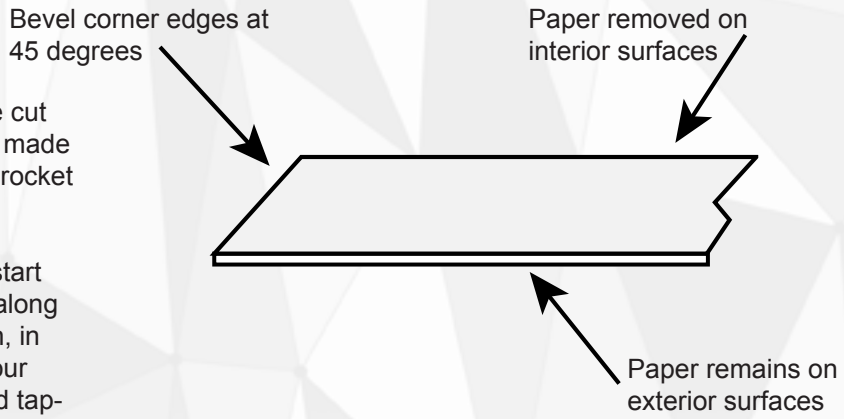


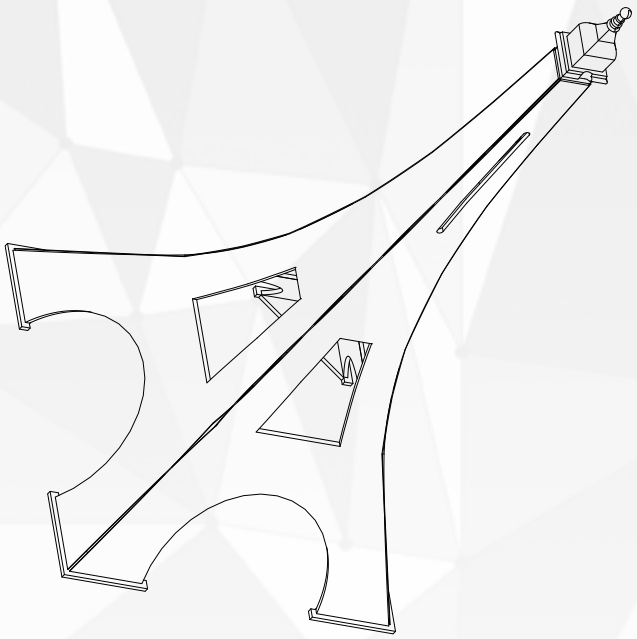

**Notes on the Internal Structure:**

The internal structure is a simple motor mount and support for a 1/4” launch lug. The main thing that is worth paying attention to is that the exact position of the square formers will depend upon exactly how tightly the corners of the Main Skin match, and how thick the foam board is (there is a slight variance between batches). As such, before gluing the formers into place it is beneficial to actually do some dry fit tests to ensure everything is sitting in the correct location. If not, simply adjust the position of the formers and shave them if necessary. Once the fit is correct, glue the formers to the central tubes, glue the launch lug into place, then glue the internal structure into the main skin.

**Notes on the Leg Stiffeners:**

The final parts of the rocket are the Foundation Pads and the Leg Stiffeners. The pads should be glued onto each corner with approximately 5mm of the pad outside the side plate. These are mainly for appearance, so they’re not in any way critical. The leg stiffeners, on the other hand, are vital for the rocket to hold together under boost. Like the side pieces, the stiffeners should have the paper on one side removed and the long edges beveled. They are then glued into the inside of each leg between the aft former and the foundation pad.

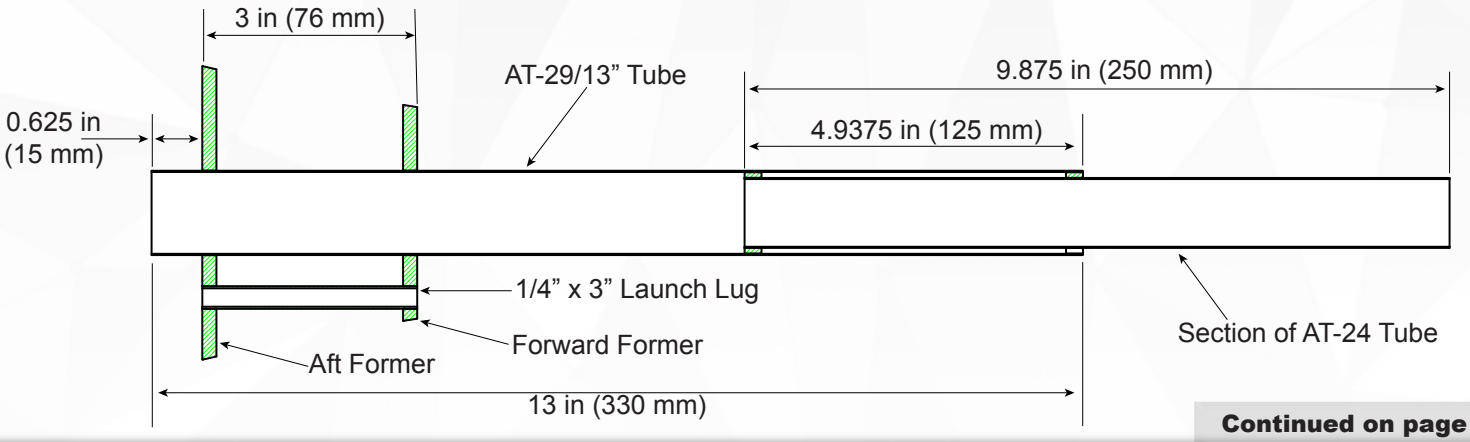


Continued on page 8

## Eiffel Tower Plan

Continued from page 7

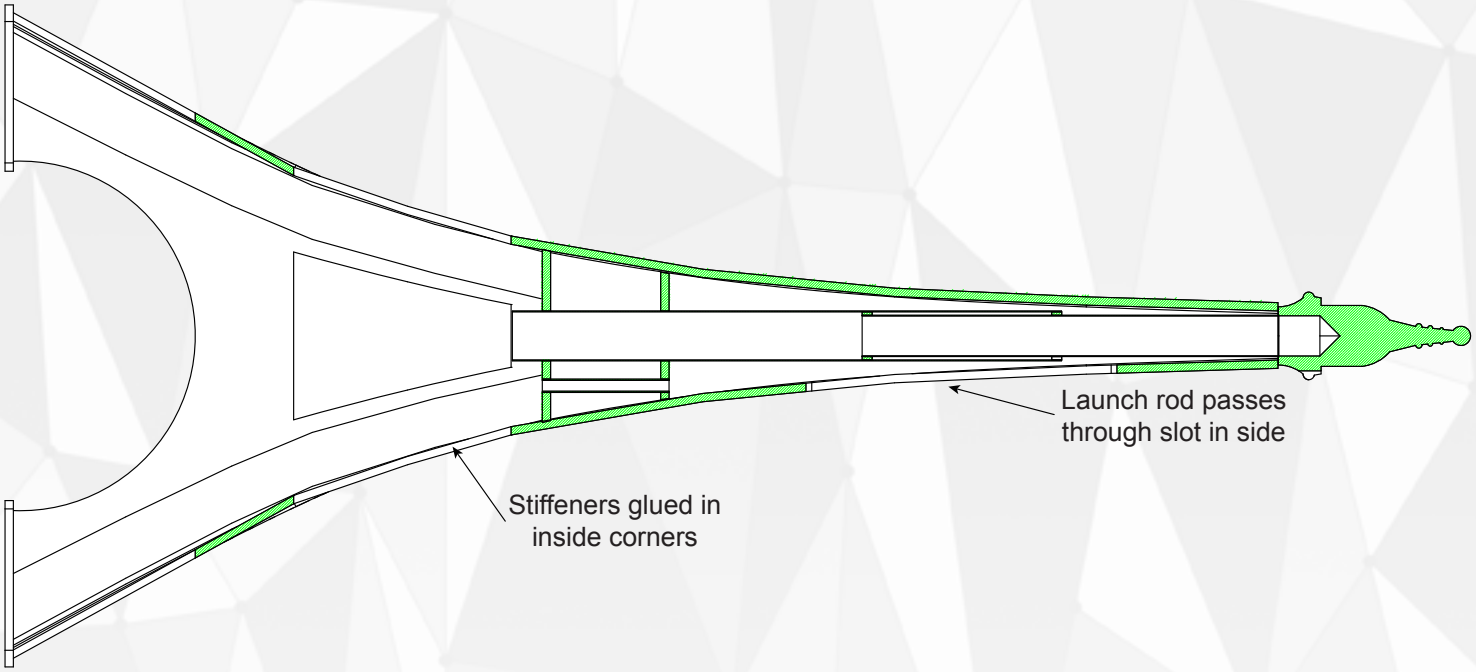


**Notes on Recovery:**

The prototype was built and flown with a 15” nylon parachute that was quite the hassle to pack into the small 24mm tube! Really the rocket is so light that it could get away with a plastic 12” parachute or – likely – even a good sized streamer. Also, because the rocket is so draggy, the rocket is generally headed back down by the time the ejection charge fires. An ideal solution would be to do electronic deployment at apogee, but a reasonable approach is to simply use the shortest delays available and ensure that the motor is powerful enough to give deployment some time.

**References:**

1. Drawings of the Eiffel Tower - https://webthesis.biblio.polito.it/17045/1/tesi.pdf
2. Model of Eiffel Tower - https://www.thingiverse.com/thing:1276837