PEAK OF FLIGHT NEWSLETTER

Issue 607 / August 29th 2023

APOGEE COMPONENTS
www.ApogeeRockets.com
4960 Northpark Dr, Colorado Springs CO 80918
Ph# 719-535-9335

In This Issue:

Corkscrew Parachute Descents (And what to do about them)

Also In This Issue:

Escape Velocity Rocket Plan

https://www.apogeerockets.com/Peak-of-Flight-Rocket-Plans

PEAK OF FLIGHT NEWSLETTER

Issue 607 / August 29th 2023

Corkscrew Parachute Descents (And what to do about them)

By Dave Flanagan

Introduction

We've all seen it, particularly with low power rocket (LPR) models. The launch is perfect, the coast phase is straight and true, and then the ejection charge fires and the parachute deploys. For a couple seconds the descent is stable, but then the entire assembly starts to swing wildly around in circles, with the airframe swinging way out on its shock cord. It "corkscrews" for the rest of the descent and finally slams into the ground. If the rocket lands in the tall grass there may be no damage. But what if it lands on desert hardpan or on the school parking lot? Fins, landing legs, escape towers, paint, and even decals can all pay a heavy price. So why does this happen and, more importantly, what can we do about it?

Corkscrew descents may happen for a combination of reasons. One is the type of parachute used in LPR models. (These are sometimes called "kit chutes.") Kit chutes belong to a category of parachutes called "flat circulars." Flat circular parachutes are unique. When heavily loaded (small parachute, heavy payload), they may oscillate a bit during descent. When lightly loaded (large parachute, light payload) they tend to glide aimlessly around the sky [1]. Generally LPR kit chutes are very lightly loaded. For LPR models the standard recommendation is no more than one gram of mass per ten square centimeters of parachute area [2]. By contrast, larger "full scale" flat circular chutes like the 28 foot military personnel parachute can be loaded to twice that, and many military cargo chutes are loaded to over three times that value! These more heavily loaded chutes may oscillate, but they don't skate around the sky like our more lightly loaded kit chutes do.

Another contributing factor may be that the standard kit parachute is often very poorly built. The suspension lines are too short and usually the line lengths vary too much. I measured the suspension lines of three 12" Estes kit chutes shipped as complete assemblies. Line lengths on the three parachutes averaged 27.9 cm. Most authorities suggest a minimum line length of one parachute diameter which in this case was 32 cm across the flats [2]. Also, the variation in line length ranged from 2.8% to 7.1% of the grand average. Consistent line length is very important in full scale parachutes and very likely ours as well. Note the Apollo parachutes were allowed a difference in line length of 0.35% at most [1]. Contrast this with the 2.8% (best case) measured here.

	Shroud Half Loop	(cm)	MaxDiff	Average	Max Difference wrt Grand Average (%)
	1	25.5			
Chute #1	2	27.4	1.9	26.6	7.1%
	3	26.9			
	1	27.7			
Chute #2	2	28.6	0.9	28.2	3.2%
	3	28.4			
	1	29.1			
Chute #3	2	28.3	0.8	28.8	2.8%
	3	29.0			
	Average	**27.9**			
	Min	25.5			
	Max	29.1			

Table 1. Line lengths of three Estes 12" "kit chutes."

Another factor that may contribute to corkscrew descents is the payload. In full scale applications (military cargo chutes, etc.) the payload is relatively heavy, compact, and generally remains directly under the parachute that supports it. It is relatively unaffected by the air flowing past it. The parachute, its payload, and the entire system's center of gravity are all aligned vertically. However, with our rockets the airframe dangles at the end of the shock cord, it is very light, and it has a very large drag area due in a large part to the fins.

So what happens? I suspect the following: After the parachute opens and the descent begins, the parachute, which as noted likes to glide, starts to do so. The comparatively lightweight airframe, with its high drag fins, falls behind. The parachute "leads" and the airframe "trails."

Continued on Page 3

About this Newsletter

You can subscribe to recieve this e-zine FREE at the Apogee Components website www.ApogeeComponents.com, or by clicking the link here Newsletter Sign-Up

Newsletter Staff

Writer: Dave Flanagan
Editor: Michelle Mason
Layout: Sky Luther

This tilts the entire assembly from the vertical. The center of gravity of the system is no longer directly under the parachute. This creates what engineers call a "moment arm" (lever) in a horizontal plane (see figure 1). If the chute is well built and there is no turbulence the glide can be steep but more or less benign. However if the chute is poorly built (which as noted many are) it can initiate a turn from the glide path. Turbulence from the nose cone, which is normally rigged very close to the parachute, may also cause a turn. Once a turn from the glide path begins the system starts to rotate around the system's center of gravity. Seen from above the parachute would appear to be gliding around in small circles with the system center of gravity unmoving in the center of the circle. Centrifugal acceleration then makes the airframe swing out which tilts the assembly from vertical even more. There appears to be no mechanism for damping this motion. Eventually a steady state corkscrew descent is established.

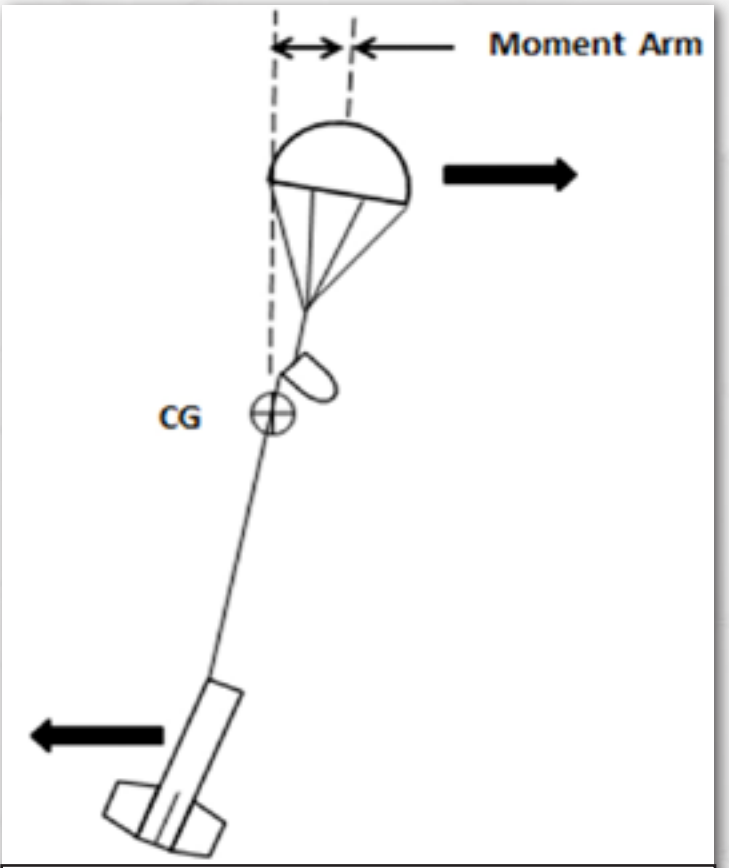

Figure 1. When gliding causes the system to tilt, the parachute is no longer positioned over the system center of gravity. This creates a "moment arm." Any tendency of the chute to turn into or out of the page causes the system to rotate around its center of gravity, initiating the corkscrew tendency.

Any situation that results in the parachute not being aligned directly over the system center of gravity raises the potential for corkscrew descents.

Test Flights

I personally do not have problems with corkscrew descents since I never use kit chutes "out of the box" nor do I assemble them according to the directions. However, I launched a few test flights using several modified Baby Berthas (three fins instead of four) powered by A8-3 motors just to see what I could learn. For one flight I installed the kit chute on the nose cone according to the directions. The parachute established a somewhat steep but straight glide with no corkscrew tendency during descent. On another flight I simulated poor construction by loosening the lines at the nose cone and making them more uneven. This flight definitely exhibited a corkscrew descent all the way into the ground (see figure 2). Then I flew a parachute I had assembled at home. In this case I had stripped the short and uneven lines from the kit chute canopy and replaced them with longer, even lines, and a short bridle. This parachute established a strait and rather stately glide with no tendency to corkscrew.

Figure 2. A corkscrew descent caused by simulated poor parachute construction/installation.

Continued on Page 4

PEAK OF FLIGHT NEWSLETTER

Issue 607 / August 29th 2023

Corkscrew Parachute Descents (And what to do about them)

By Dave Flanagan

Figure 3. Close up of a kit chute with the original lines stripped from it and replaced by longer and more even lines. Lines are taped in place then gathered together with an overhand knot. Note also the short bridle.

These flights suggest that uneven lines can cause corkscrew descents. They also show that it is possible that kit chutes as supplied can avoid corkscrew descents if their lines happened to be even enough and if the parachutes are installed carefully on the nose cone. Finally they show that replacing the lines with longer and more even lines can help prevent corkscrew descents.

Prevention

(1) Most modelers tend to spend very little time on the parachute since their only reason for using a chute is so they can launch the rocket more than once. The chute is often an afterthought for both modelers and some kit manufacturers. Take great care when assembling the chute. Above all, make sure the lines are all long enough and of the same length. If the chute comes preassembled and the lines are uneven or too short, strip them from the canopy and carefully install your own. I do this for all my kit chutes anyway. See reference 3.

(2) Don't connect the parachute directly to the nose cone. Use a bridle or riser of at least one parachute diameter between the nose cone and where the parachute lines come together. It is not proven but this may prevent any turbulent wake trailing behind the nose cone from affecting the parachute and causing a turn. I always use at least a short bridle on my chutes.

Figure 4. A small kit chute with a bridle installed between the snap swivel and the "suspension line confluence" (where the lines come together). This may prevent the parachute from being affected by turbulence from the nose.

(3) Cut some holes in the chute. Cutting holes in the chute increases what parachute experts call "geometric porosity." Increasing geometric porosity decreases a parachute's tendency to glide all over the sky (there are some exceptions.) Spill holes (technically called "apex vents") are nearly always a good idea. You can remove up to 25% of a kit chute's total area when making a spill hole although it is probably not necessary to make one that large (see reference 4)!

Continued on Page 5

Figure 5. A kit chute with 25% of its area removed to make a spill hole.

(4) Finally, you can modify a kit chute so it becomes a different type of parachute altogether. An example is the "ringslot" parachute. It is easy to make (even from a kit chute that is already assembled), is very stable, opens very softly, and doesn't glide (see reference 5).

Figure 6. A 12" kit chute modified into a "ringslot" parachute.

Remember that parachutes with holes in them generally descend faster, so it is possible you might want to go up one size.

Investing just a little bit of extra care and attention to your model's parachute may let you get a lot more flights out of it!

Have fun!

References

1. Knacke, T. W., Parachute systems design manual, NWC-TP-6575, March, 1991.

2. Stine, G. H., Handbook of model rocketry, 6th Ed., 1994.

3. Flanagan, D. T., Upgrading Low Power Rocket Kit parachutes. Peak of Flight #578, July 19, 2022. https://www.apogeerockets.com/education/downloads/Newsletter578.pdf

4. Flanagan, D. T., Maximum spill hole size in low power rocket parachutes. Peak of Flight #580, August 16, 2022. https://www.apogeerockets.com/education/downloads/Newsletter580.pdf

5. Flanagan, D. T., The ringslot parachute. Peak of Flight #485, December 25, 2018. https://www.apogeerockets.com/education/downloads/Newsletter485.pdf

Acknowledgement

The author would like to thank Mr. Steve Riegel of Front Range Rocket Recovery for his input following a review of the first draft of this article.

About the Author

Dave is a registered professional engineer with over twenty years of aerospace experience at NASA's JSC and MSFC. He holds B.S. and M.S. degrees in engineering and a B.S. degree in science, and while at MSFC supported NASA's University Student Launch Initiative. He earned his airborne wings in the Army and holds an expert skydiver rating from the U.S. Parachute Association. Dave is an FAA master parachute rigger and has completed the AIAA Parachute Systems Technology Short Course. He is also a FAA licensed private pilot and an EAA certified ultralight pilot. Dave is retired and lives in the Missouri Ozarks where he flies model rockets at a rural airport, usually ones recovered by really weird looking parachutes.

Escape Velocity Parts List

10086 - (1) AT-18/18” (6/pk) - 9” used
13028 - (1) CR-13/18 (6/pk) - 1 needed
14098 - (1) Balsa Sheet 1/16” x3” x 18” (1/pk)
BLUE - 5”x1.5” needed
19801 - (1) PNC-18B (3/pk) - 1 needed
30303 - (1) 2”x56” Mylar Streamer (2/pk) - 1 needed
30325 - (4) Kevlar Cord 100#
- Copy paper for fin skins

Order parts at:
https://www.apogeerockets.com/Quick_Order

Recomended Motors
Estes 1/2 A6-2 - 189’ (58m) Single Use
Quest A3-4 - 561’ (171m) Single Use
Estes A8-3 - 564’ (172m) Single Use
Quest B4-6 - 1307’ (398m) Single Use
Estes B6-6 - 1184’ (361m) Single Use
Quest B6-6W - 1381’ (421m) Single Use
Estes C6-7 - 2224’ (678m) Single Use
Quest D20-8 - 2905’ (886m) Single Use
Aerotech D24-10 - 3647’ (1112m) Reloadable

Download the **RockSim** design file for Escape Velocity at:
https://www.apogeerockets.com/Peak-of-Flight-Rocket-Plans

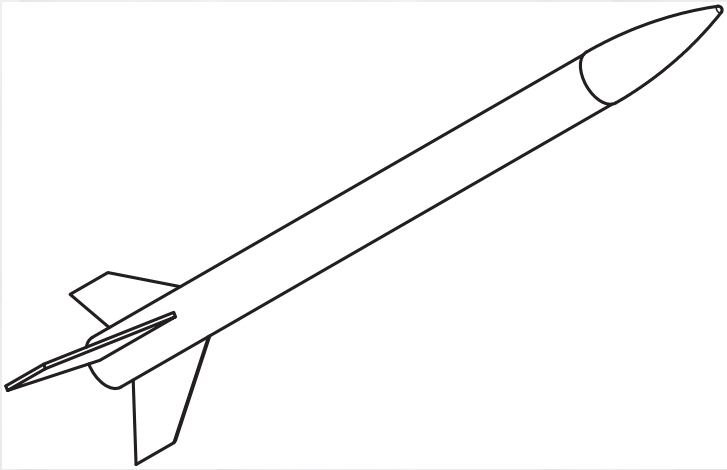

Escape Velocity By Martin Jay McKee

Introduction:
The Escape Velocity is a simple rocket with insane performance. Built light and launched out of a tower (e.g. P/N 07696 https://www.apogeerockets.com/Launch_Accessories/Launch_Pads/Apogee_Competition_Launch_Tower), a composite Quest D20W will push this rocket to just past the speed of sound (and to an altitude of nearly 3000’)! Building is exceptionally easy, and the rocket can also be flown to impressive heights on even small motors. An Estes 1/2A6 will send the Escape Velocity to 200’.

While the Escape Velocity is a genuinely easy rocket to build, it provides an excellent base for experimentation and development of skills.

Continued on Page 7

Escape Velocity Plan

By Martin Jay McKee

Building Notes:

The fins on the Escape Velocity are constructed of thin wood and while they are sufficient for A and B class motors without skins; for flights on C and D class motors, the fins should be papered (hence the patterns being included in the plan).

The shock cord is mounted by being tied around the engine block before the engine block is glued into place. It should be ensured that the shock cord is tightly secured to the ring before glue is applied in the tube and the ring is inserted to act as an engine block.

For maximum altitude and velocity, the fins should be airfoiled and any step between the nose cone and tube sanded smooth. Additionally, the surface of the rocket should be painted smooth using a minimum of paint (to keep the weight down). The Escape Velocity is unlikely to break the speed of sound if the completed empty weight is greater than 14 g (0.5 oz).

Decal (Print on Clear)

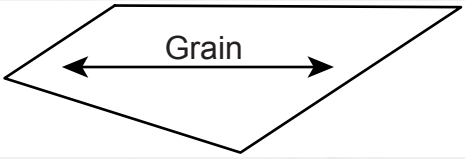

Fin Template

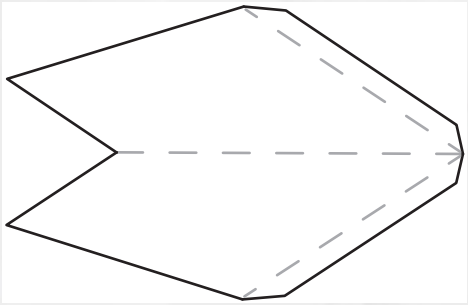
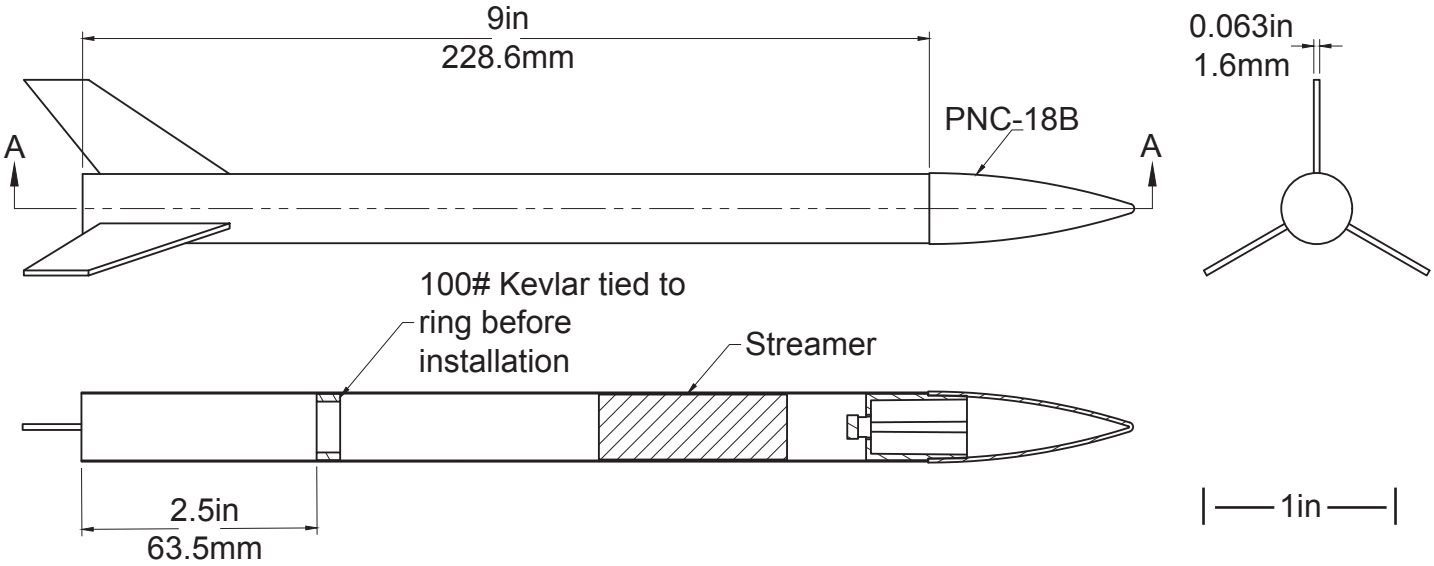
Fin Skin Template