PEAK OF FLIGHT NEWSLETTER

Issue 610 / October 10th 2023

APOGEE COMPONENTS
www.ApogeeRockets.com
4960 Northpark Dr, Colorado Springs CO 80918
Ph# 719-535-9335

In This Issue:

How Long Should an Engine Mount Tube Be?

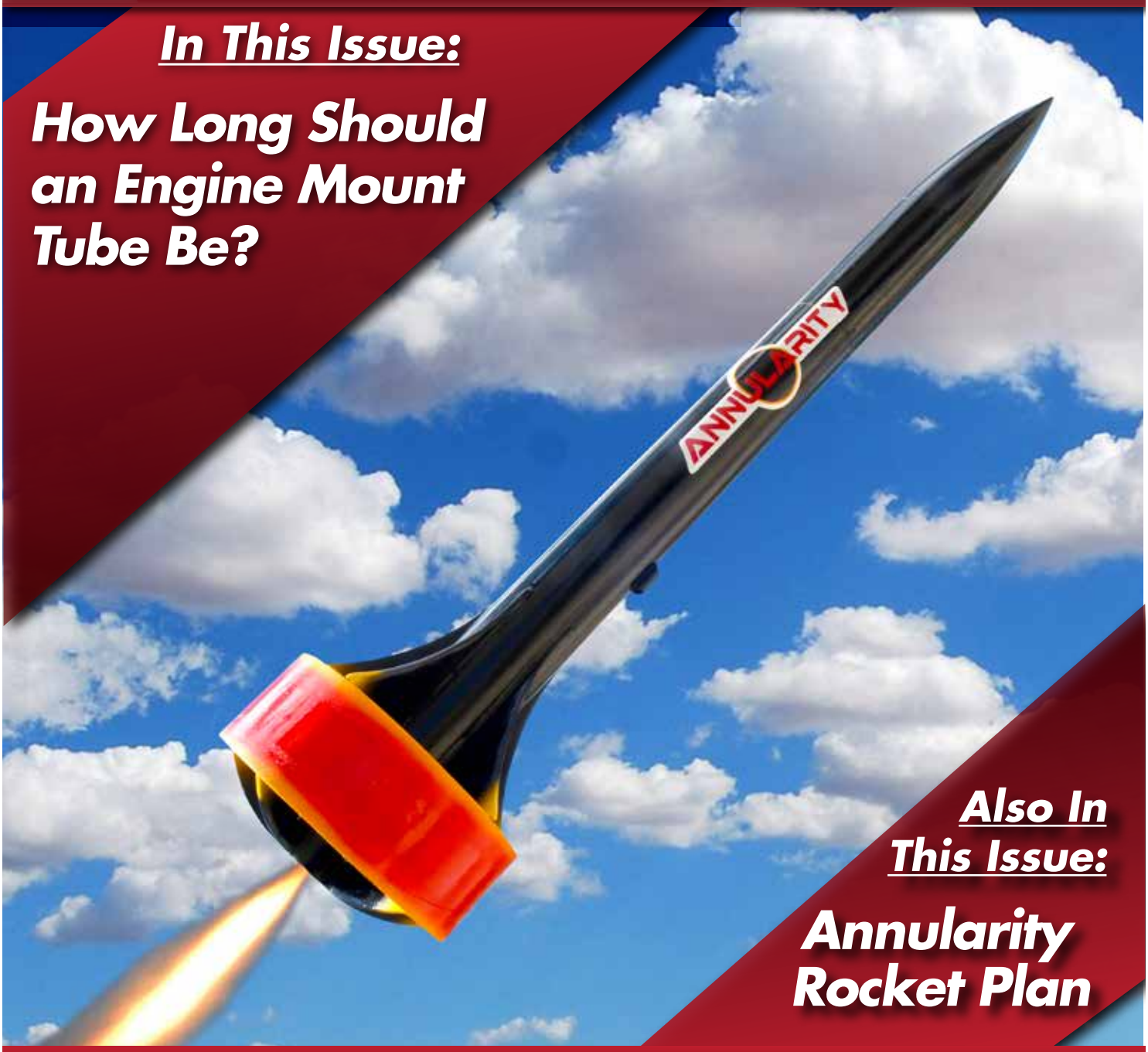

Also In This Issue:

Annularity Rocket Plan

https://www.apogeerockets.com/Peak-of-Flight-Rocket-Plans

PEAK OF FLIGHT NEWSLETTER

Issue 610 / October 10th, 2023

How Long Should an Engine Mount Tube Be?

By Tim Van Milligan

How long should an Engine Mount Tube Be?

During a RockSim Live training session, one of the viewers asked a good question on what the optimum length of the engine mount tube inside a model rocket is. The answer depends on what you consider to be the optimum criteria. In this article we'll cover the different criteria that you might consider when designing your own rockets.

What is the purpose of the motor mount?

The engine mount serves three key functions. First, it securely holds the motor concentrically inside the rocket. We want all the thrust to be on the centerline of the rocket. If the motor is off to one side of the centerline, or is canted, it will cause the rocket to go unstable and cartwheel across the sky. The components in the engine mount that hold the engine mount tube in the middle of the body tube are the centering rings.

Second, the motor mount must be strong enough to transfer the thrust force created by the rocket motor to the airframe of the rocket. It is pretty rare that the rings aren't strong enough, so we'll ignore this aspect in this article. But if you're interested in making stronger centering rings, see Peak-of-Flight Newsletter #126 (https://www.apogeerockets.com/education/downloads/Newsletter126.pdf).

The third function of the motor mount is to hold the rocket motor securely, so that it can't fly up through the inside of the rocket, nor be kicked out the rear end by the ejection charge.

With these three criteria in mind, the standard engine mount for a model rocket looks like figure 1.

A typical low-power engine mount consists of two paper centering rings, the paper motor mount tube, and the engine retention which consists of the paper engine block and the metal engine hook.

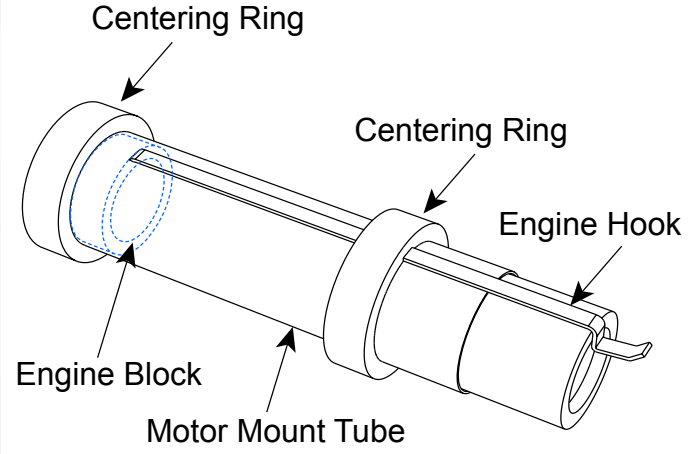

Figure 1 - Typical components of an engine mount

This article focuses primarily on the motor mount tube, which is not talked about too much. But when you're talking about optimizing it, then other components may be affected because they will need to do some of the tasks that the tube does.

What are we trying to optimize?

The first criteria that pops into most designer's minds is the "weight of the motor mount tube." The obvious answer is that you want the rocket to be as lightweight as possible. If the rocket is lightweight, it will have better performance; meaning it will fly higher and faster.

To make a lighter weight engine mount tube, the first thought might be to make it shorter. How short can you make an engine mount tube? The answer is that you can actually eliminate the tube altogether. There have been numerous examples of rocket kits that didn't have motor mount tubes in them. For example, the kits with plastic fin units, such as the Estes Astrocam (https://www.apogeerockets.com/Model-Rocket-Kits/Skill-Level-1-Model-Rocket-Kits/Astrocam) shown in figure 2.

About this Newsletter
You can subscribe to recieve this e-zine FREE at the Apogee Components website www.ApogeeComponents.com, or by clicking the link here **Newsletter Sign-Up**

Newsletter Staff
Writer: Tim Van Milligan
Editor: Michelle Mason
Layout: Ryan Conway

Figure 2 - The Astrocam engine mount doesn't have a paper tube running through it.

If you dissect it, you'll find that essentially there are two rings that hold the motor concentrically within the outer plastic case. One is at the nozzle end, and the other at the forward end.

In figure 3, we have a cut-away taken from the instruction sheet of the old Estes kit called the Double Ringer (https://www.apogeerockets.com/Rocket-Kits/Skill-Level-1-Model-Rocket-Kits/Double-Ringer). It also had a plastic engine mount without a paper tube in it. As shown in the image, the portions that are indicated with the red shading are the rings that hold the engine concentrically into the tube.

There are some other key components in this design that are necessary to make it work as an engine mount. The

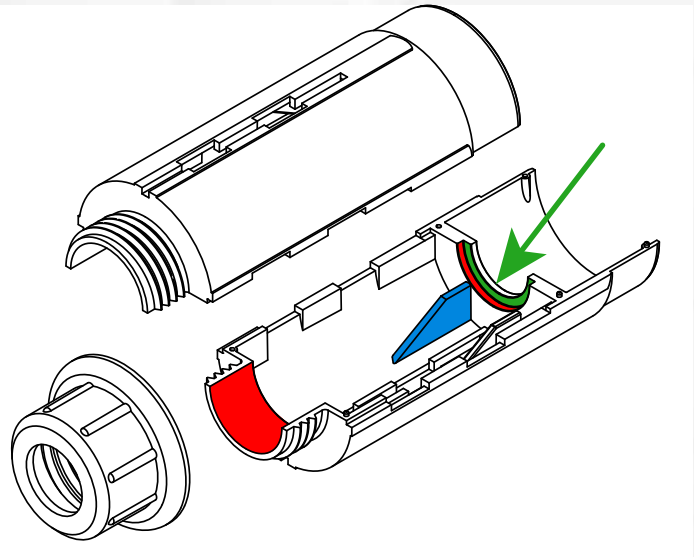

Figure 3 - The engine mount from the Estes Double Ringer kit.

first is a step in the front ring (shown in green shading) that acts as the engine block to prevent the rocket engine from sliding too far into the rocket body. Second, there is the screw-on cap that goes onto the rocket after the motor has been installed. It is needed to prevent the motor from being kicked out rearward by the ejection charge. And finally, there is a ramp (the blue shaded region) that helps guide the motor into the front red ring. Without this ramp, the front of the motor might not sit properly inside the forward ring. If it isn't in the ring, the motor would be canted within the motor mount, and that is bad. A motor that is canted will create a vectored thrust that will cause the rocket to cartwheel when it is launched.

Can this arrangement be duplicated by a modeler? Yes. With 3D printed parts, it is very easy to duplicate this type

How Long Should an Engine Mount Tube Be?

By Tim Van Milligan

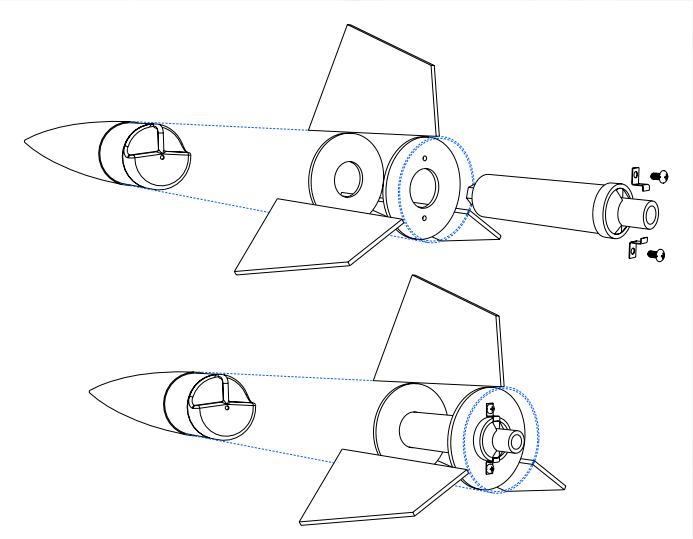

Figure 4 - Two centering rings, and some clips to hold the motor in make a simple motor mount.

of arrangement. But if you didn't have a 3D printer, could you still do it? The answer is yes.

Figure 4 shows a mid or high-power design that meets all the criteria for an engine mount, but without the paper motor tube inside of it.

This design has two centering rings that fit around the rocket motor casing itself. The thrust ring on the back of the motor, which butts up against the aft centering ring, prevents the motor from sliding up into the rocket. You would need something to prevent the motor from ejecting rearward out the back of the rocket; and in this case two screw-in clips (called Kaplow Clips) are used.

There are two drawbacks of this design. The first is that inserting the motor's forward edge through the front centering ring might be a challenge. You'd have to feel around by rocking the motor back and forth to get it to go through the hole. The other drawback is that installing the ring into the rocket could also be a challenge. You want the ring perpendicular to the tube, and not slanted.

Additionally, you want it installed at the proper distance from the back edge of the rocket. If you put it in too deep, there is a chance that the motor may not be long enough to slide through the hole in the ring.

These two drawbacks might be good reasons to want a motor mount tube in the design - it makes putting that front centering ring into the tube much easier and at the right distance. The extra weight of the tube is a small price to pay for the convenience of rocket assembly and motor installation.

Another variation of the tubeless design is shown in Figure 5. In this version, the front centering is gone, which removes the problem with installing it into the tube at the right depth and making sure it is perpendicular to the edges of the tube.

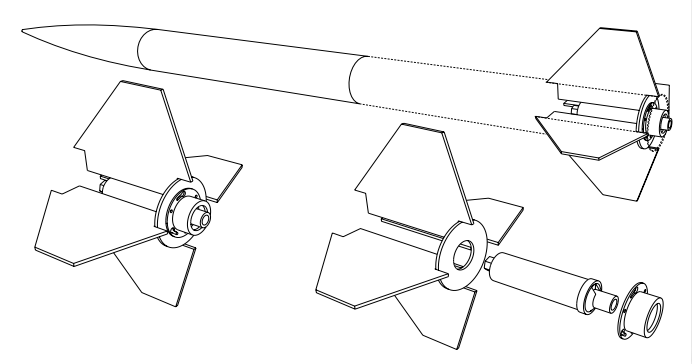

Figure 5 - Another motor mount without a motor tube.

The image in the bottom right of figure 5 shows an exploded view of the main components. The design uses through-the-wall fins, where the fins go all the way to the outer casing of the rocket motor to hold it concentric inside the tube. To restrain the motor, you would use something like the flat bottom engine retainer (https://www.apogeerockets.com/Building-Supplies/Motor-Retainers-Hooks/Flat-Bottom-Rocket-Motor-Retainers/29mm-Flat-Bottom-Rocket-Retainer) or the clips shown in Figure 4 to prevent the motor from sliding rearward in the rocket. And to prevent the motor from sliding forward, the motor block that is on the back of the rocket motor slides up against the rear centering ring that is on the base of the rocket.

The disadvantage of this design is that the through-the-wall fins won't be as strong as a traditional design where the root edges of the fin are glued to the motor mount tube. The fins are only held in by the bond they make with the outside tube. Since fins are more likely to break than other parts of a rocket, modelers typically want them attached as firmly as possible. Again, having a motor mount tube has an advantage if you want a strong rocket.

Advantages for Having A Motor Mount

So at this point, I hope you see there are some advantages for actually having a motor mount tube inside the rocket. Here are some that we discussed so far:

1. Makes it easier to get the front centering ring perpendicular to the walls of the tube of the rocket.
2. Makes it easier to position the front centering ring at the correct depth into the body tube.
3. Allows a place to attach through-the-wall fins, to make the fins much stronger.

There are other reasons as well:

4. The tube often provides a convenient anchor to attach the shock cord in the model. The engine mount is often the strongest point in the vehicle, and the combination of the tube and the front centering ring makes it an excellent place to attach the shock cord.

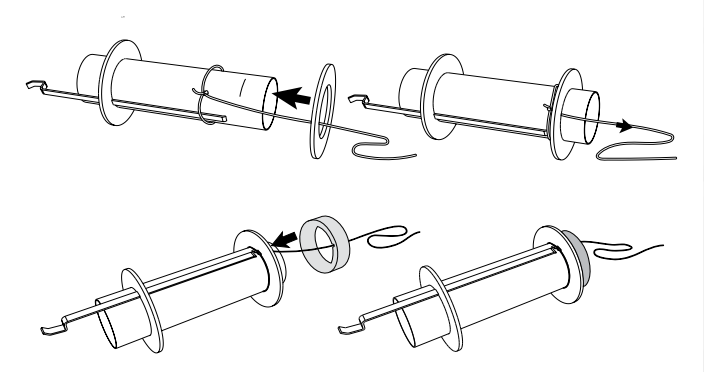

Figure 6: The tube makes a convenient location to tie the shock cord to.

5. The motor tube strengthens the rocket. It creates a tube inside the outer tube of the rocket, and that significantly increases the bending strength of the tube.
6. It allows you to friction-fit the motor into the rocket. Normally I don't like wrapping tape around the rocket motor to hold it into the engine mount tube. But there are some cases where you don't have many easy or convenient options. For example, rockets with a boattail on the rear end as shown in Figure 7. This is especially true if you want the rear of the motor to be flush with the back edge of the boattail for the lowest drag.

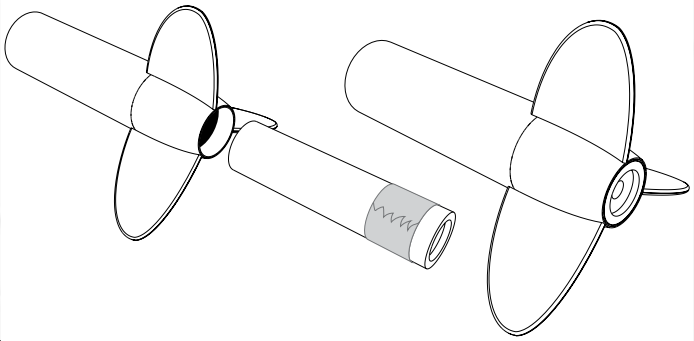

Figure 7: Without an engine mount tube, you can't use friction-fit to hold the motor in.

7. Allows you to wrap tape around the perimeter of the motor tube to keep the motor in the rocket as shown in Figure 8. This is a quick and easy way to keep a motor in the rocket. It is also a lightweight and very cheap motor retention method.

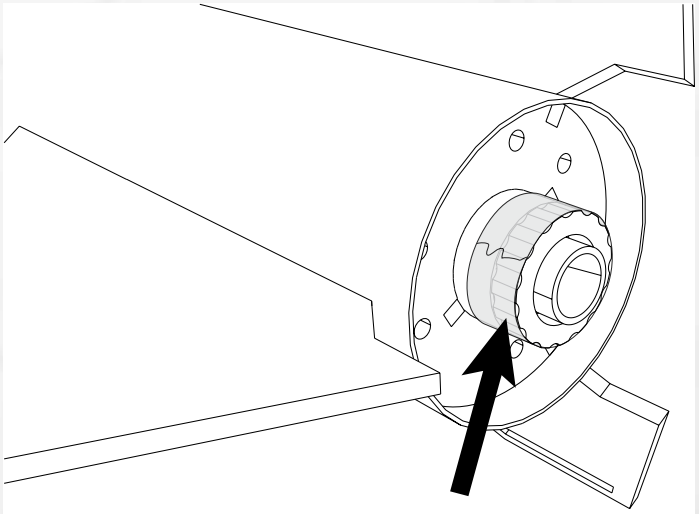

Figure 8 - A motor tube allows you to wrap tape around the outside to hold the engine in the rocket.

How Long Should the Motor Mount Tube Be?

We have shown that it is possible to make the engine mount tube short, or even non-existent. But what about making it longer? Is there any advantage to doing that? And then how long is too much?

When I design an engine mount, here are some of the things that I consider that I use to determine the length of the tube.

1. What type of engine retention is going to be used on the kit? If I'm using an engine hook, like shown in Figure 1, there is a minimum length that the tube has to be. It turns out that we just make the tube the same length as the rocket engine itself, and there is enough room for everything to fit.

   If the engine retention is going to be something like tape around the outside of the motor (shown in Figure 8), or if there is going to be a screw-on retainer, then the motor tube can possibly be a little shorter.

   Since most Aerotech and Cesaroni motors have the engine block built into the motor itself, we don't have to make the tube longer than the motor for those brand motors. The motor can extend out the front of the tube as shown in Figure 9. That is OK, and is done all the time.

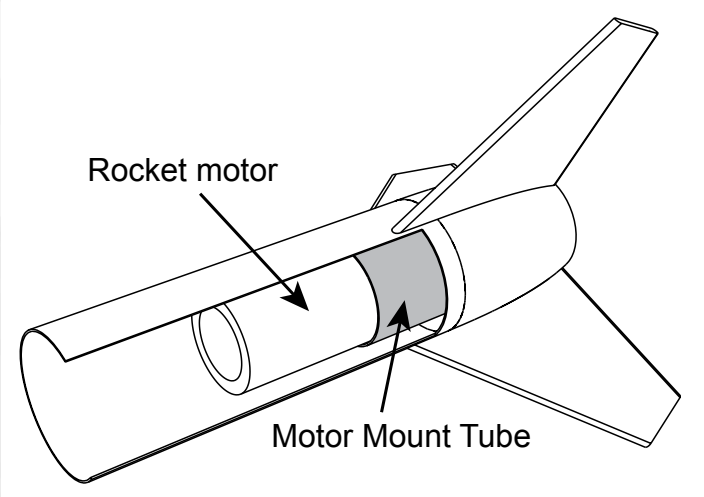

Figure 9: It is allowable to have the motor extending forward of the motor tube.

2. While we can make tubes shorter by cutting them to the right length (such as to minimize weight), it isn't as convenient or as inexpensive as using a tube that we already have in stock. If we have a tube in our stock that is "close enough", it makes sense and will be cheaper for us to use it. Maybe it is the same for you… whatever you find in your collection of spare parts that is already cut might be good enough.

3. Our next consideration is if the rocket has through-the-wall fins. If it does, we want the minimum length of the motor tube to extend a little further into the rocket than the forward edge of the fin slots. Ideally, we want the fin tab to butt up against the centering rings inside the motor mount as shown in Figure 10. What this does is

to increase the surface area where we can attach glue to the fin tab. Not only does the root edge have glue on it mating to the motor mount tube, but the front and rear edges of the fin tab are glued to the centering rings. This makes for an incredibly strong fin joint.

The one challenge with assembling the motor mount shown in Figure 10, is that you can't easily put glue fillets internally where the fin tab touches the tube and the centering rings. There are a couple of ways that you might be able to get around this issue. The first is like what we did on our Zephyr rocket kit (https://www.apogeerockets.com/Rocket-Kits/Skill-Level-3-Model-Rocket-Kits/Zephyr). The aft ring has holes in it so that a string can be woven through them. The string makes a handle that allows the temporarily installed ring to be pulled out of the tube after the fins were tack-glued in. With the back end open, you can easily apply glue fillets to all the internal joints between the fin tabs and the tube and the forward centering ring. Once the glue is hard, the aft centering can then be glued in place against the rear edges of the fin tabs. See Figure 11.

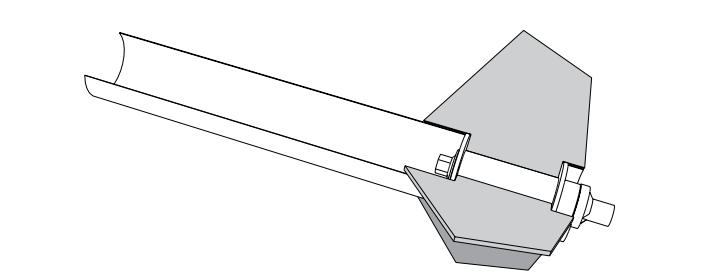

Figure 10: The motor tube should extend just further than the fin tabs for maximum fin strength.

There is another way to get around the problem of applying internal glue fillets to the fin tabs. That is to make the motor mount longer and put two centering rings on the forward part, as shown in Figure 12.

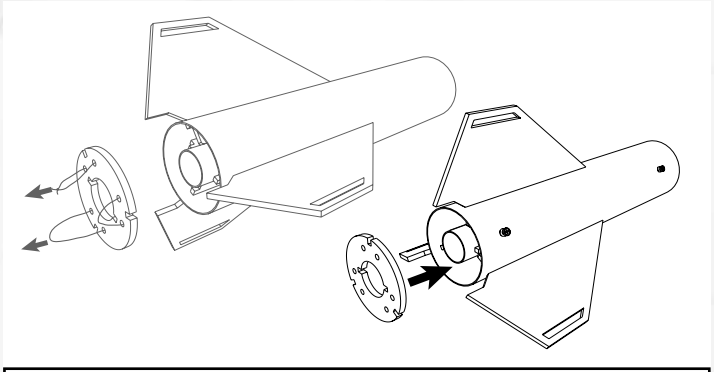

Figure 11: A removable aft centering ring allows you to come back and put glue fillets inside the tube.

The tube is glued so that the aft ring is just forward of the slits for the fin tabs. With that glued in place, the fins can be glued in, and internal fillets can be applied to permanently bond the fin tab to the motor mount tube.

Finally, a third centering ring is put onto the tube and glued up against the fin tabs. This is how we did it on the Apogee Kronos rocket kit (https://www.apogeerockets.com/Model-Rocket-Kits/Skill-Level-3-Model-Rocket-Kits/Kronos).

The distance between the two forward rings needs to be sufficient to ensure that the motor tube is perfectly concentric in the outer tube. Sometimes the rings can have a little slop in them which could tilt the tube ever so slightly. If this happens, getting that third back ring onto the motor tube could be a chore. The further apart the two forward rings are, the greater the likelihood that the tube will be centered properly.

The maximum practical length for the motor mount tube is determined by making sure that you still have enough room in front for the parachute or for a shoulder on the tube coupler that may join the rear section of the rocket to the front section.

PEAK OF FLIGHT NEWSLETTER
Issue 610 / October 10th, 2023

How Long Should an Engine Mount Tube Be?

By Tim Van Milligan

Depending on the diameter of the rocket, you may want to have a very long motor tube. The reason has to do with making sure the ejection charge is powerful enough to kick the parachute out at apogee.

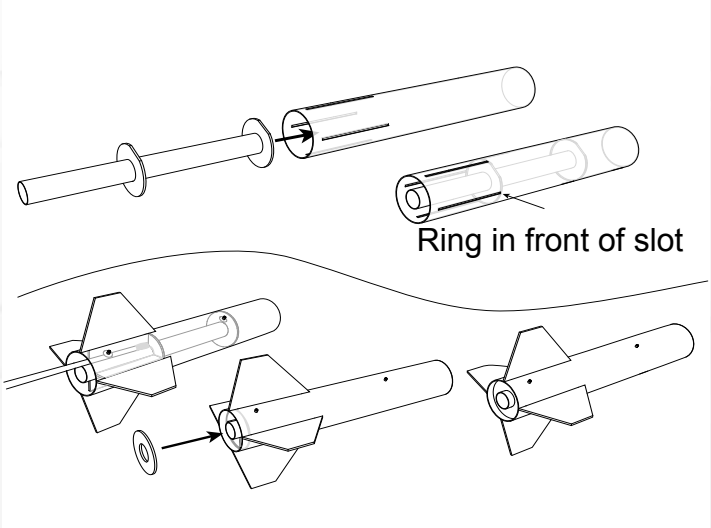

Figure 12: A long engine mount tube allows you to leave the back end of the tube open to apply internal fillets with a dowel.

The ejection charge built into the motor, can only pressurize a certain amount of tube volume. If it can't build up enough pressure, then a tight fitting parachute or shoulder may not budge. We've all seen rockets where the parachute doesn't come out. In fact, recovery failures are the cause of a significant number of crashed rockets. The bigger the diameter of the rocket, the more this should be a concern.

Using a longer motor tube allows us to reduce the amount of large diameter tube that has to be pressurized. It is one of the reasons that kits like the Kronos and the DynaStar Grappler (https://www.apogeerockets.com/Rocket-Kits/Skill-Level-2-Model-Rocket-Kits/Grappler) have a long motor tube.

This long tube, used to reduce the amount of volume inside the rocket that has to be pressurized, is called a "Stuffer Tube."

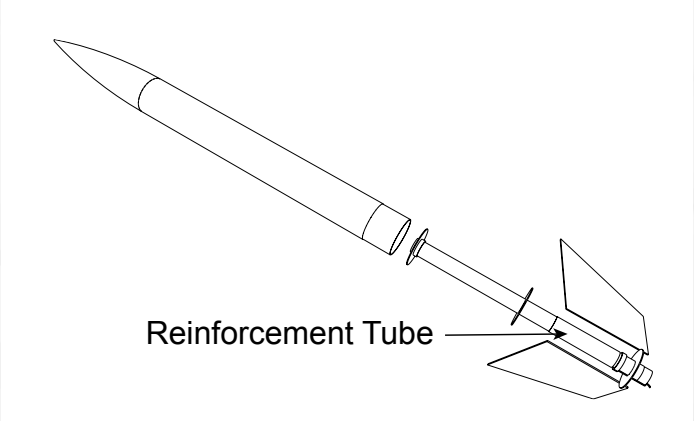

Figure 13: Grappler rocket with the aft body tube removed.

One thing that you may want to consider, as shown in Figure 13, is a reinforcement tube that is just in front of the rocket motor on the stuffer tube. This only needs to be done on thin-wall motor mount tubes, like a standard BT-50 (24mm diameter) tube (https://www.apogeerockets.com/Building_Supplies/Body_Tubes/Low_Power_Tubes/24mm_x_18_Body_Tube_Estes_BT-50_size). See *Peak-of-Flight* Newsletter #418 (https://www.apogeerockets.com/education/downloads/Newsletter418.pdf) for more information.
For thick-wall tubes, like the 29mm thick wall body tube (https://www.apogeerockets.com/Building_Supplies/Body_Tubes/29mm_to_54mm_Tubes/29mm_x_34in_Thick_Wall_Tube), you do not need it, because it is rigid enough.

How do you know if you need a stuffer tube?

This is where you'll need to do some homework and calculate if the ejection charge of the motor is sufficient to adequately pressurize the volume of tube ahead of the rocket motor. You'll need to use what is called an "ejection charge calculator."

RockSim version 11 (https://www.apogeerockets.com/RockSim/RockSim_Information?pg=rocksim), which is in development at the time of writing of this article, has an ejection charge calculator that will make the process much simpler. A screen shot is shown in Figure 14.

It is very simple to use. Just draw a box (the gray shaded area) in the rocket that represents the volume that needs to be pressurized by the rocket motor. In Figure 14, the gray box starts at the base of the nose cone's shoulder, and extends just to the forward centering ring that holds the motor mount in the rocket.

Once you have that selected, RockSim automatically calculates the amount of Black Powder (BP) required to sufficiently pressurize the volume, which is shown in the lower left. In the case of the Zephyr rocket shown, the BP required is 1.26 grams.

From here, you have to know how much BP is in the rocket motor. To get that information, you'll need to open up the rocket motor web page on the Apogee website. For this example, I thought I'd chose the Aerotech H100 rocket motor (https://www.apogeerockets.com/Rocket-Motors/AeroTech-Motors/38mm-Motors-Single-Use/Aerotech-38mm-HP-SU-Motor-H100W-14A). If you scroll down the page to the Frequently Asked Questions (FAQ's), you'll find a section that lists the amount of BP in the motor. See Figure 15.

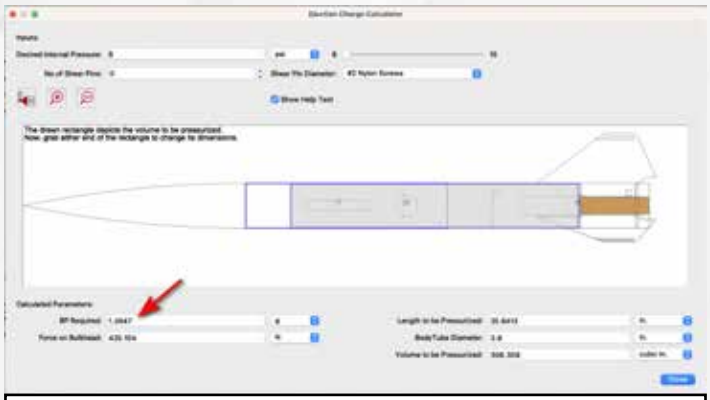

Figure 14: RockSim v11 ejection charge calculator used to determine if a stuffer tube is needed in the design.

From this webpage, we see that the Aerotech H100 should have 1.4 grams of black powder in it for the ejection charge. Since this is greater than the minimum needed to pressure the volume, we can safely say that we don't need a stuffer tube.

Had the amount of black powder been lower than the required amount, we would need to put that forward centering ring on the motor further up into the tube so the volume that needs to be pressurized is reduced. The RockSim software would make this task really easy, because you'd just adjust the gray box to be shorter until the required BP matched the available amount in the rocket motor. That would tell you where you needed to put the forward centering ring.

Conclusion

You probably thought the topic of designing a motor mount tube was simple. But actually, there has to be a lot of thought that goes into the configuration of the back end of the rocket. The optimum length depends

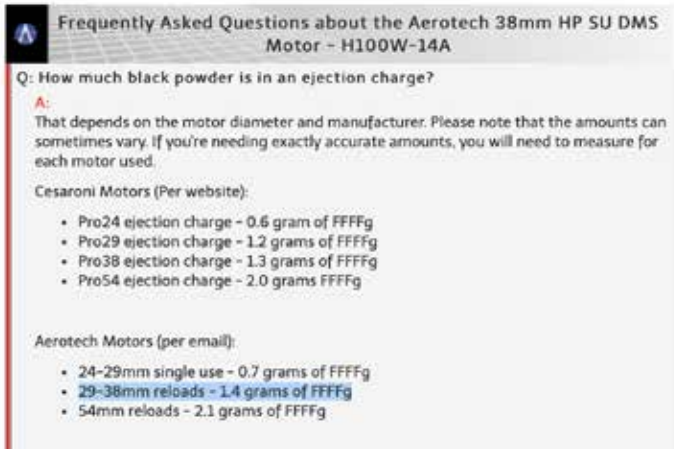

Frequently Asked Questions about the Aerotech 38mm HP SU DMS Motor - H100W-14A

Q: How much black powder is in an ejection charge?

A:
That depends on the motor diameter and manufacturer. Please note that the amounts can sometimes vary. If you're needing exactly accurate amounts, you will need to measure for each motor used.

Cesaroni Motors (Per website):

- Pro24 ejection charge - 0.6 gram of FFFFg
- Pro29 ejection charge - 1.2 grams of FFFFg
- Pro38 ejection charge - 1.3 grams of FFFFg
- Pro54 ejection charge - 2.0 grams FFFFg

Aerotech Motors (per email):

- 24-29mm single use - 0.7 grams of FFFFg
- 29-38mm reloads - 1.4 grams of FFFFg
- 54mm reloads - 2.1 grams of FFFFg

Figure 15: From the Apogee website of the Aerotech H100 rocket motor, you'll find the amount of BP used in the ejection charge.

on a lot of variables, like what type of engine retention is used, whether or not you have through the wall fins, and if the rocket motor can sufficiently pressurize the parachute compartment to have a successful deployment.

If you have any additional questions about designing rockets, you might want to pick up a copy of my book: Model Rocket Design and Construction (https://www.apogeerockets.com/Rocket_Books_Videos/Books/Model_Rocket_Design_And_Construction). Like this article, it is highly illustrated, and will give you thousands of ideas for creating your own successful rocket models. And if you want it autographed, be sure to put that in the comments when you order the book from our website.

Additional Information:

Common Misconceptions about Centering Rings (https://www.apogeerockets.com/education/downloads/Newsletter126.pdf)

Make Centering Rings for Canted Rocket Motors (https://www.apogeerockets.com/education/downloads/Newsletter363.pdf)

W hat Causes Engine Mount Damage in Rockets with Stuffer Tubes? https://www.apogeerockets.com/education/downloads/Newsletter418.pdf

About The Author:

Tim Van Milligan (a.k.a. "Mr. Rocket") is a real rocket scientist who likes helping out other rocketeers. He is an avid rocketry competitor and is Level 3 high power certified. He is often asked what is the biggest rocket he's ever launched. His answer is that before he started writing articles and books about rocketry, he worked on the Delta II rocket that launched satellites into orbit. He has a B.S. in Aeronautical Engineering from Embry-Riddle Aeronautical University in Daytona Beach, Florida, and has worked toward an M.S. in Space Technology from the Florida Institute of Technology in Melbourne, Florida. Currently, he is the owner of Apogee Components (http://www.apogeerockets.com) and also the author of the books: Model Rocket Design and Construction, 69 Simple Science Fair Projects with Model Rockets: Aeronautics and publisher of the "Peak-of-Flight" newsletter, a FREE e-zine newsletter about model rockets. You can email him by using the contact form at https://www.apogeerockets.com/Contact.

PEAK OF FLIGHT NEWSLETTER

Issue 610 / October 10th, 2023

Annularity

By Martin Jay McKee

On October 14, 2023 there will be an annular solar eclipse that will be visible across the western part of North America as well as parts of Central and South America (Eclipse Information - https://solarsystem.nasa.gov/eclipses/2023/oct-14-annular/where-when/). Given the rarity and splendor of solar eclipses, it seemed appropriate to build a rocket to celebrate the occasion. Annularity is a ring fin design whose graphic design is based on the striking ring-of-fire shape visible in an annular eclipse. Even beyond its connection to the upcoming eclipse, however, the rocket is a fairly simple build and is a striking design – certainly worth adding to anyone's stable of rockets.

An annular eclipse of the type that will be seen October 14, 2023 and which inspired the design of Annularity.

About Solar Eclipses:

A solar eclipse happens when the Moon passes directly between the Sun and Earth. Because the Moon orbits the Earth at an angle just like the Earth orbits the Sun at an angle, there are many different forms that an eclipse can take. These types are broadly classified as partial, annular, and total.

A partial eclipse is any time that the Moon is covering some portion of the Sun from the side. A partial eclipse can consist of the Moon just barely covering the edge of the

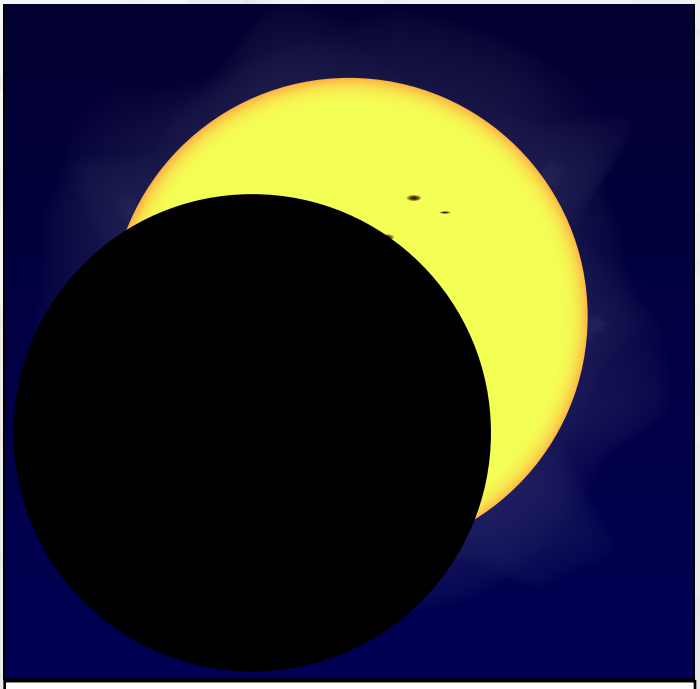

During a partial eclipse the sky darkens as the sun is covered by the moon, but it never reaches the pitch-black, midnight-like, dark of a total eclipse.

Sun or covering 99% of it. Sometimes a partial eclipse is all that is visible from Earth. Even when there is a path of annularity or totality, however, there is also a path where the eclipse can be seen as only a partial eclipse. The path where totality can be seen is called the Umbra and it represents the path where the full shadow of the Moon passes over the Earth's surface. In the case of an annular eclipse, this path is known as the Antenumbra and it represents the path where the Moon is visible entirely within the circle of the Sun. Finally, the path of partiality is known as the Penumbra.

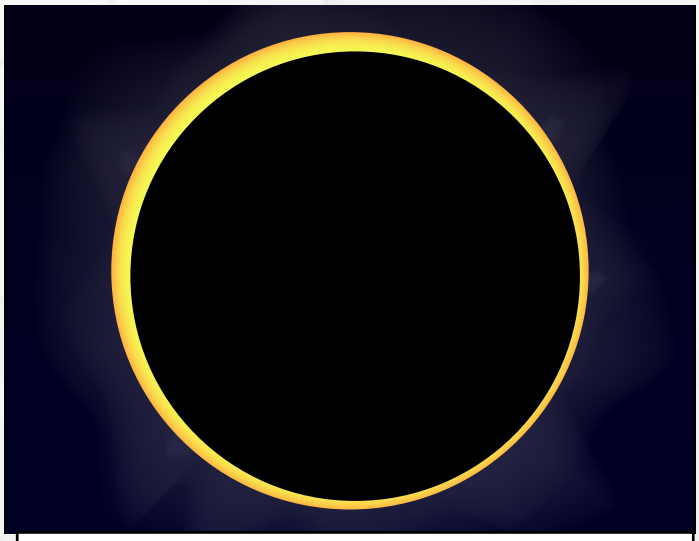

An almost black sky and ring-of-fire view of the sun are typical of an annular eclipse.

An annular eclipse happens when the Moon is too far away from the Earth in its orbit to completely cover the disk of the Sun. During the annular portion of an eclipse (known as annularity) a continuous ring of the sun is visible surrounding the edge of the dark moon. Since the

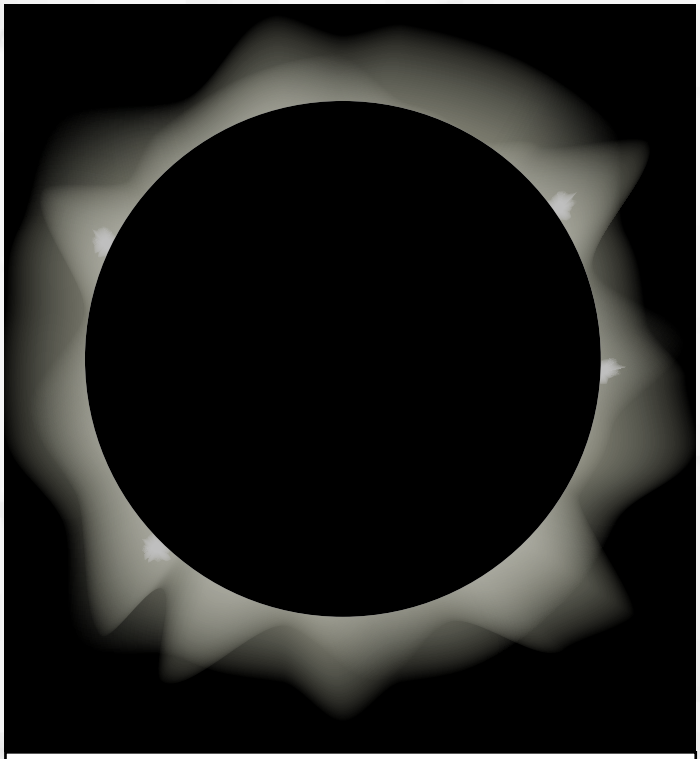

With the disappearance of the sun's light during totality, the winds often calm and animals become still, inspiring a magical air to viewing the corona and - sometimes - solar prominences.

sun is never totally covered, eclipse glasses are required for viewing the entire eclipse. Also, while the sky darkens substantially during an annular eclipse, it does not become totally dark as it does during a total eclipse.

A total eclipse happens when the Moon is close enough to the Earth to completely cover the Sun when the Moon passes between the Sun and the Earth. During a total eclipse, the sky becomes dark enough that the sun's corona (outer atmosphere) becomes visible and stars may even be

CHECK OUT THE APOGEE YouTube PAGE
CLICK OR SUBSCRIBE HERE FOR OUR HELPFUL AND INFORMATIVE HOW-TO VIDEOS ON MODEL ROCKETRY
https://www.youtube.com/c/apogeerockets
APOGEE COMPONENTS

visible. During totality, the sun's light is so attenuated by the interposed Moon that it is safe to view the spectacle without protective glasses during the period of totality. This allows an unforgettable view of the otherwise invisible corona.

Item #	Item Name	Qty
10131	33.6mm x 18" Body Tube (Estes BT-55 size) - 1 tubes required	1
10220	AT-98/18" Airframe Tube Set - a section of one tube required	1
12028	Boattail Motor Mount Kit 18/33 - Cardstock Rings	1
13052	1/8" x 1" Launch Lug - 1 cut into two pieces	1
14097	Balsa Wood Sheet - 3/32" x 3" x 18"	1
20068	PNC-33	1
29126	12"/15"/18" cut-to-size plastic parachute (15")	1

Construction Notes:

It is simple to build the Annularity with only a couple of more challenging steps. The Boattail Motor Mount kit comes with excellent instructions which make building it very straightforward despite it appearing rather more complicated than a standard low-power motor mount. As designed, the crimped engine hook is inline with the launch lug for purely aesthetic reasons. This is not required, however, and any rotation of the engine hook will work. The fin and launch lug locations can be marked with the included fin marking guide to simplify fin alignment.

The most difficult part of construction is cutting out the five balsa wood fins as they do include a long tapered portion toward the front. With care - and a sharp blade - it is possible to cut out accurate fins.

Finally, the paint design is difficult to achieve with the rocket fully assembled and it is preferable to keep the central rocket (and fins) separate from the ring fin during painting, then attach the parts with thin CyA adhesive (superglue) after finishing.

PEAK OF FLIGHT NEWSLETTER
Issue 610 / October 10th, 2023

Annularity

By Martin Jay McKee

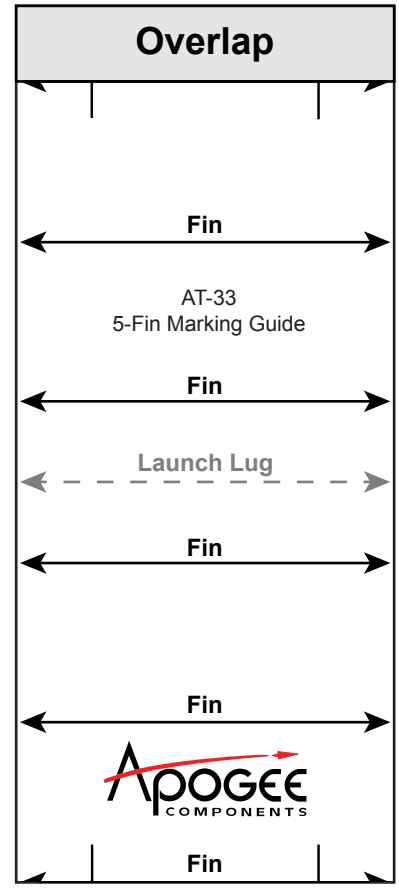

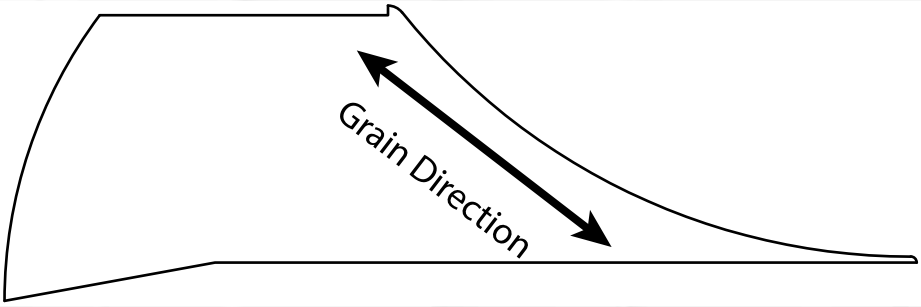

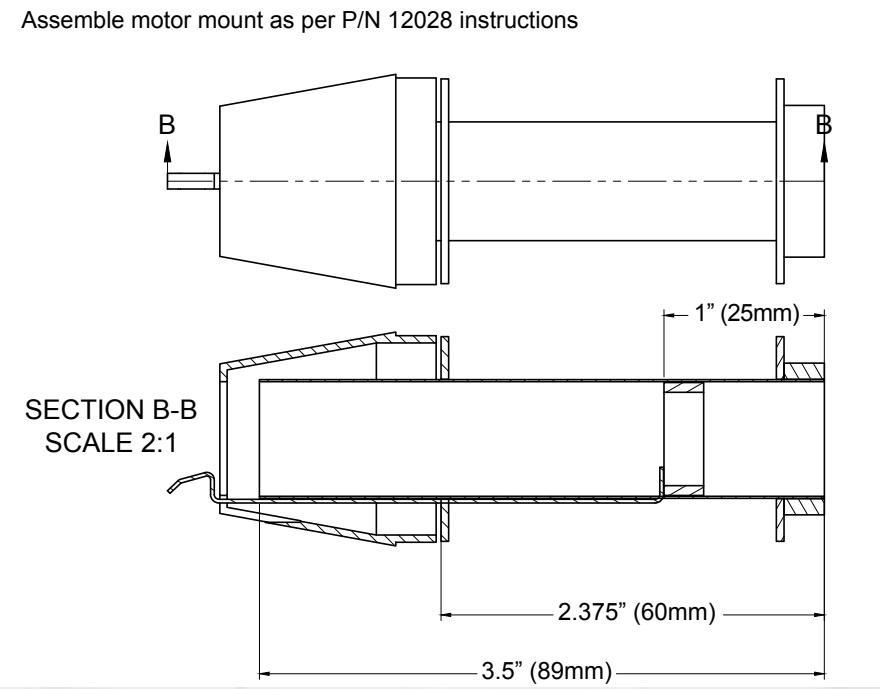

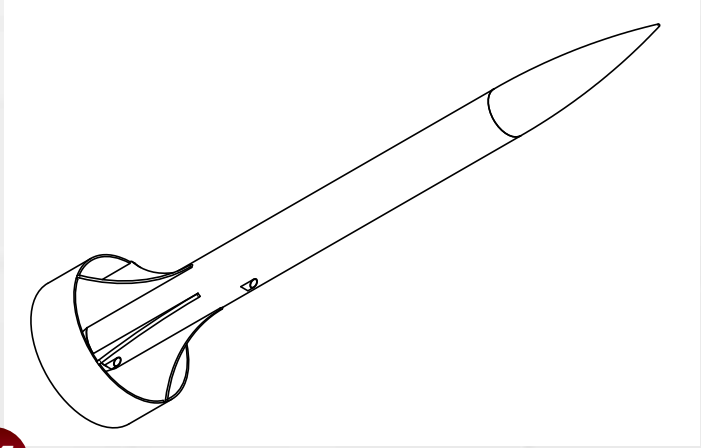

JOIN TRIPOLI.ORG
Mention Apogee Components

Check out our Facebook page
www.facebook.com/ApogeeRockets

NEED A PARACHUTE?
APOGEE HAS THE ONE YOU'RE LOOKING FOR!
www.ApogeeRockets.com/Building-Supplies/Parachutes

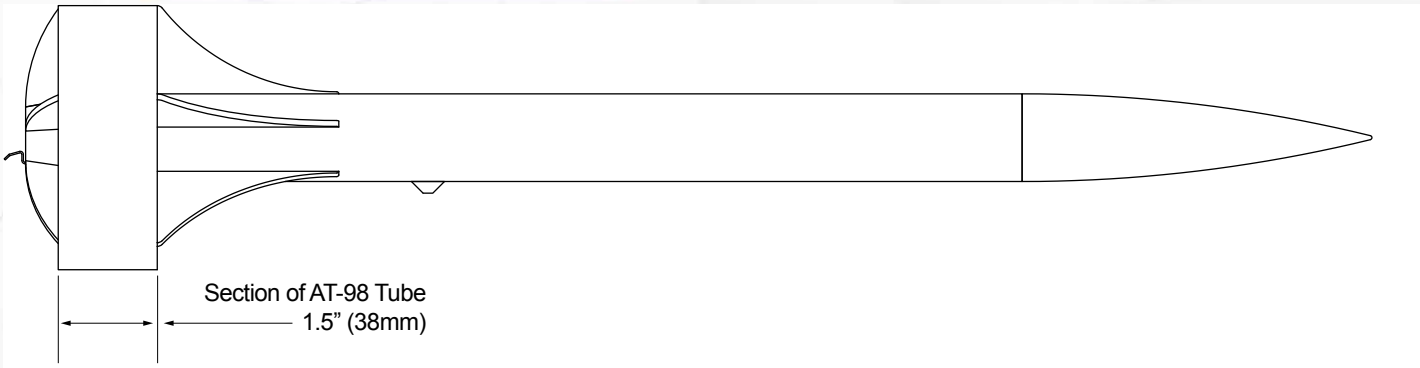

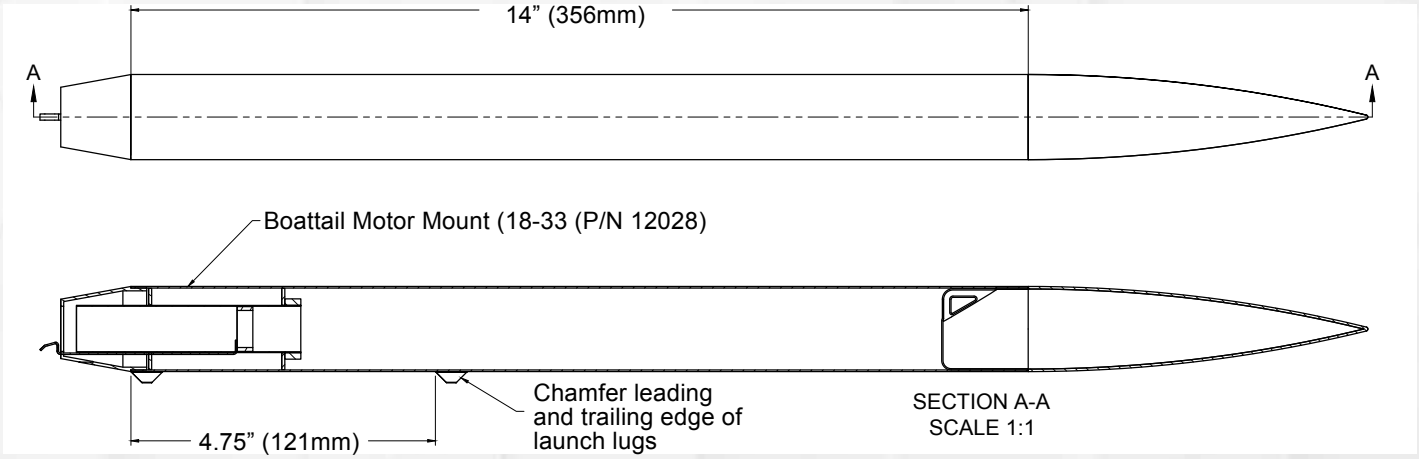

About The Author:

Martin has been designing and building rockets for as long as he can remember. After originally toying with the idea of pursuing a career in Aerospace Engineering, he did a double major in Computer Science and Fine Art then spent a decade working in K-12 math and science education. Only recently did he land at Apogee Components as the Product Designer.