PEAK OF FLIGHT NEWSLETTER

Issue 612 / November 7th 2023

APOGEE COMPONENTS
www.ApogeeRockets.com
4960 Northpark Dr, Colorado Springs CO 80918
Ph# 719-535-9335

In This Issue:

Exploring the Visual Design Differences Between Sport & Scale Model Rockets

Also In This Issue:

Rear Eject Fatman Plan

https://www.apogeerockets.com/Rocket-Kits/Skill-Level-4-Model-Rocket-Kits/Interrogator-MidPower

PEAK OF FLIGHT NEWSLETTER

Issue 612 / November 7th, 2023

Exploring the Visual Design Differences Between Sport & Scale Model Rockets

By Ryan Conway

INTRODUCTION

I recently joined Apogee Components as a graphic designer, and I have been utilizing my skills to design decals for our model rocket kits. So in every conceivable way, I am a newbie in the world of model rocketry. I do have experience in the world of graphic design, however that does not equate to an immediate knowledge of rocket paint & decal design. So how does one become familiar with applying one's professional skills to a completely new endeavor? And more specifically, how does one define the visual aesthetics of sport rockets as opposed to scale rockets? I invite you to join me on this journey as I explore these concepts.

Figure 1: There is a stark contrast between the visual design of scale rockets and sport rockets

It is important to note that I will not be diving into the details of rules for Sport Competition and Scale Competition. We do have a few articles from past newsletters that dig into these kinds of details. However, I will keep this article focused on the visual differences between sport and scale rockets.

SPORT ROCKETS

Sport Rockets exist in all shapes, sizes, and colors. The visual design for a sport rocket is really wide open. It can be almost anything you want it to be. There is no tradition that must be adhered to in the visual design of the rocket's decals or paint job. The options available are only constrained by the designer's imagination.

It is almost impossible to define the design characteristics of a category that is so wide open. However, there are some trends that do appear to manifest. Sport rockets are more likely to have bold colors that are in high contrast with one another. Complimentary colors (hues that are opposite from one another on the color wheel) are more likely to be used in combination with one another in sport model rocketry. These bright colors also lend some functionality in trying to see an object so far up in the sky, when viewing from the ground.

Illustrations also play a much greater role in sport model rocketry. Whether those illustrations are flames, pin-striping, pop-culture references, or other imagery. . . they tend to have a more artistic feel to the overall presentation of the rocket.

About this Newsletter

You can subscribe to recieve this e-zine FREE at the Apogee Components website www.ApogeeComponents.com, or by clicking the link here Newsletter Sign-Up

Newsletter Staff

Writer: Ryan Conway
Editor: Tim Van Milligan
Layout: Ryan Conway

PEAK OF FLIGHT NEWSLETTER

Issue 612 / November 7th, 2023

Exploring the Visual Design Differences Between Sport & Scale Model Rockets

By Ryan Conway

Figure 2: Sport rockets can have varying designs and are meant to be visually appealing to the eye.

A sport rocket can have almost anything be the basis for its inspiration. Do you want to make a rocket that looks like a pencil or crayon? Cool. Have an idea for a rocket that looks like a dragon? Awesome. How about a rocket that looks like your favorite cartoon character? You bet! The gates are wide open, and you can start the design process from any piece of inspiration that interests you.

Sport rockets can have wildly creative logos to create a sense of identity for the rocket. Or they can have no logo at all. But for those who want a logo/name on their sport rocket, the width of the cylinder is probably the most limiting factor. In a general sense, sport rockets that use the length of the tube for the logo tend to have horizontal logos, by nature. They rarely have a square or circle logo because it will not occupy much real estate in that space. Unless of course, they are applied to the fins. In that case a squarish or circular logo usually fits nicely.

While both sport & scale rockets often have their names on them, sport rockets can have a bit more fun with how the name is displayed. Any legible typeface that can fit on the tube is a potential option. Between being able to use type in a creative way and being able to choose any color for the paint job, the design for sport rocketry can really be anything under the sun.

The color palette for sport rockets tends to be much more vivid and creative than the color palette for scale rockets. The entire spectrum of hues is available for the person

Figure 3: A wide range of typefaces and illustrations can be employed in the creation of a logo for a sport rocket.

designing a sport rocket. The same cannot be said for the color palette of scale rockets.

When looking for resources to design your sport rockets, remember that Apogee Component's website has a sortable rocket list that you can check out. https://www.apogeerockets.com/index.php?main_page=sortable_rockets_list&m=catalog You can also check out our variety of FREE rocket plans as well. https://www.apogeerockets.com/Peak-of-Flight-Rocket-Plans This website also has lots of old catalogs that are a great resource when trying to think of design elements. http://www.ninfinger.org/rockets/rockets.html

SCALE ROCKETS

Scale rocketry is focused on the representation of a historical rocket. Dimensional accuracy is absolutely part of the competition aspect of scale model rockets. But in a more general design sense, you can still build a scale rocket that is not dimensionally accurate while still aiming to make a representation of a real rocket.

Many real rockets tend to lean towards white or silver cylinders with minimal markings that are functional in nature. You might have a booster that is colored red, but it is often a muted red or orange. . . not the kind of bright red that we think of when someone says the phrase "rocket red." In general, the color palette of scale rockets tends to be much more monochrome with small amounts of color used for functional elements.

The markings on a scale rocket might include roll patterns, which help observers to see how that cylinder is turning in three-dimensional space. Other exterior markings might

Figure 4: The visual design for scale rockets focuses on functionality as it relates to the purpose of the mission.

help identify the different stages of the rocket. Real rockets have textured details like rivets, compartment hatch doors, exhaust vents, and other mechanical pieces. Some of the smallest details might be too small to represent, depending on the scale of the model. Will the rivets be painted on, or will they be three-dimensional somehow. Those are the decisions left up to the person making the model.

It is much more frequent that real rockets and their scale counterparts have vertical type identifying the name of the rocket. Of course, vertical text is not synonymous with scale rocketry (sport rockets can have vertical type as well). It's not a hard & fast rule either - scale rockets sometimes have horizontal text along the length of the

Figure 5: Scale rockets have many detailed nuances to the visual design. These are all functional designs that have a distinct purpose.

rocket. But as a general rule of thumb, scale rockets are more likely to have vertical type on the exterior, as opposed to a sport rocket.

Because there are physical limitations to flying a real rocket, scale rockets also represent these logistics. For example, painting a large fuel tank might add hundreds of pounds to the overall weight of a full-size rocket, which changes the dynamics of its flight physics. This is why the Delta II rocket that Tim worked on in the early 1990's was a bluish-green color. That color was actually just a primer to prevent corrosion in the salty air of Florida. Putting additional colorful paint on the outside would just add weight and reduce payload capacity. As a result, real rockets tend to have a minimalistic design in regards to color and paint. That same minimalism is present in scale model rockets.

Education is not specific to scale model rocketry specifically, however scale design tends to lean more towards the direction of learning the history of space flight and the incremental advances that were made with each historical vehicle that was launched. The design aesthetic is heavily influenced by functional elements of the rocket, and by having to incorporate those elements into the design, the rocketeer usually learns about those functional elements.

CONCLUSION

The motive of the rocketeer is the defining characteristic of which category any given design falls into. Yes, there are guidelines that define each category, but really it is about the inspiration that is the genesis for any given model project. While both sport and scale have the ability to educate the participant, scale seems to drill down a little bit further into the history of the space program and examines the design choices that were made for real rockets. For the rocketeer that is looking to just have fun and possibly have the ability to express themselves artistically through the customized design of their rocket, sport rocketry's lack of boundaries is perfect for those reasons.

While most designs do fall into one category or another, there is indeed plenty of overlap between the two. And likewise, a single rocketeer might be involved in the pursuit of building rockets for both sport & scale. Nothing about these two categories should ever make anyone feel boxed-in. On the contrary, the potential design options are endless regardless of how a rocketeer might choose to design their next rocket.

Designing is really about funneling inspiration into a fully-realized concept. Understanding the purpose of a build informs the ability to design appropriate decals and paint designs. Whether you decide to build sport rockets, scale rockets, or both. . . be sure to have fun and learn new skills. If you have any questions for us at Apogee about the differences between scale rockets and sports rockets (or any other rocket-related questions), please don't hesitate to contact us at https://www.apogeerockets.com/Contact.

ABOUT THE AUTHOR

Ryan Conway's expertise is in graphic design, illustration, and video production. Having recently moved back to Colorado Springs, Ryan has been working at Apogee Components since September of 2023. Graduating from Colorado State University with a degree in graphic design, Ryan has worked for a variety of companies and clients, including his favorite band, Blind Melon. He is also an abstract painter and had his first gallery showing at CityArts in Wichita (in 2021). He enjoys hiking trails in the foothills, drawing in his sketchbook, and playing guitar & singing at open mics.

PEAK OF FLIGHT NEWSLETTER

Issue 612 / November 7th, 2023

Rear Eject Fatman Plan

By Perry Olson

INTRODUCTION

A few years back I made a model rocket that looked like a bomb. It had the traditional “nosecone pops off and parachute deploys” type of recovery and when I showed it to my son he said “Too bad it doesn’t have a chute that comes out of the bottom so it comes down like a bomb should.”

Kids. You can never please them.

So never being one to pass up a challenge…that I actually wanted to do…I pass up a lot of challenges I don’t. I decided to design a rear eject bomb rocket. I designed a bunch, actually, but they all depended on 3D printed parts because most of the rockets I design do. But that limits your audience. Not everyone has a 3D printer, or has access to one. And I wanted to design a rocket that everyone could make, providing they could obtain the parts. So I took my basic rear eject bomb rocket idea and produced this.

The final rocket with basic olive paint and an unfinished foam nose next to a standard 18mm engine for scale.

Apogee Parts list:

Item #	Item Name	Qty
14812	66mm TARC Foam Nose Cone - 1 per pack	1
10198	66mm x 18” Body Tube (BT-80) - 4 per pack You’ll use 1 and perhaps part of another	1
10131	33mm x 18” Body Tube (BT-55) - 6 per pack You’ll use part of 1 tube	1
10086	18mm x 18” Body Tube (BT-20)	1
13474	Foam Core Centering Ring 33/66 - 2 per pack There might be wood alternatives to these	2
13396	Centering Ring 188mm to 33mm	1
12214	Tube Bulkhead Disk 33mm	1
29090	12” Printed Nylon Parachute	1
14100	Balsa Sheet - 3/32” x 4” x 18”	1
30303	Mylar Streamer 2” x 56” - 2 per pack You’ll use 1 streamer, but save the other as this takes some heat damage over time	
13052	1/8” launch lugs	1
24048	Standard Engine Hooks	1
30326	300# Kevlar Cord	24”

You’ll also need a sheet of 110lb card stock to cut the tail cone out of, and the attached pattern sheet.

A lot of these items come in bulk packs so if you buy everything on this list you will have lots of extra stuff left over to build more rockets with. Certainly not a bad thing!

General build notes:

There are two main assemblies to this rocket. The motor pod and the bomb itself. The motor pod is designed to pop out the rear of the rocket and fall separately on a streamer. As it does so, it will drag out the parachute used by the bomb to fall gracefully to the earth. The end result is quite satisfying.

Assembly 1: The Motor Pod

Please refer to this figure for assembling this portion:

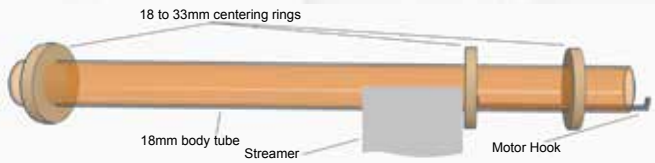

The general layout of the motor pod. This pod recovers on its own with the streamer.

Cut a piece of the 18mm body tube to 243mm long. I arrived at this number using my eyecrometer and then measured it when I was done building the rocket. Your length may vary a little. Don't worry if it's not exact, we can adjust for it later. Just try to get close.

Make a slit about 60mm from one end for the engine hook. Glue one of the 18 to 33mm centering rings to where this hook goes through the slit. A little over to hold the hook in place is ok. The position of these rings need not be exact.

Glue another 18 to 33mm ring about 20 mm from the bottom of the motor tube. Again, the position need not be exact. This ring will control the tension on the engine hook so feel free to move it up or down to get the amount of tension you are comfortable with.

Between these two rings, wrap the motor tube and engine hook with masking tape to hold the hook nicely in place.

Take a third 18 to 33mm centering ring and cut a little notch in it. The shock cord for the bomb's parachute will need to run through this notch, so use that as a guide. As the motor pod ejects from the rocket it may slide along the shock cord at this notch, so feel free to make it a loose fit.

This centering ring can then be glued about 10mm from the top of this tube. Again the position is not exact.

You can now tape a streamer to the 18mm body tube just above the ring on the top of the motor hook. The area above this streamer is where the parachute and it's associated shock cord will sit when the rocket is loaded.

Assembly 2: The Bomb

To begin the bomb we must first build the inner tube. For that we're going to need 250mm of the 33mm body tube, the two 33/66 foam centering rings, and the tube bulkhead.

Here's the figure for this part:

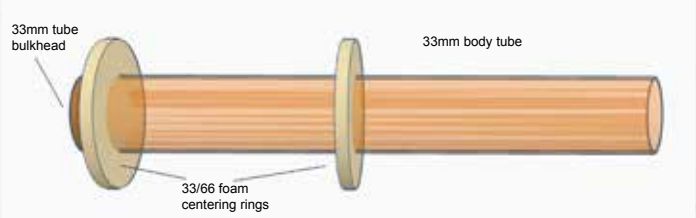

The 33mm tube forms the core of the rocket. All the rest of the rocket mounts to it, and it contains both the motor pod as well as the main recovery parachute.

The middle of these centering rings is about 135mm from the bottom of the tube. And the top ring is about 10mm. While the position of the top doesn't matter as much, try to get the middle ring close to that number. The tail cone goes over one edge of this centering ring so this ring has an effect on things later on. It's not SUPER critical, so don't worry if you're a mm off, but try to get it close.

Take the 33mm tube bulk head and decide how you want to attach a shock cord. The bulk head comes with a screw eye, but personally I'd drill out a hole in the center of this bulkhead and thread the Kevlar shock cord through it, tying a knot to keep it from going through. This way if the cord ever breaks (heaven forbid!) you can easily replace it. It also allows you to put the shock cord in at a later step.

If you decide you DO want to use the screw eye, now is the time to attach the shock cord and screw the screw eye into the bulk head. If your drilling a hole for your shock cord (recommended), it's best to wait until later to put the shock cord in.

This 33mm tube is the inner tube where the previously assembled motor pod will sit when the rocket is ready to fly. The top of that motor tube will push against the bulkhead to propel the rocket, and then the ejection blast

Rear Eject Fatman Plan
By Perry Olson

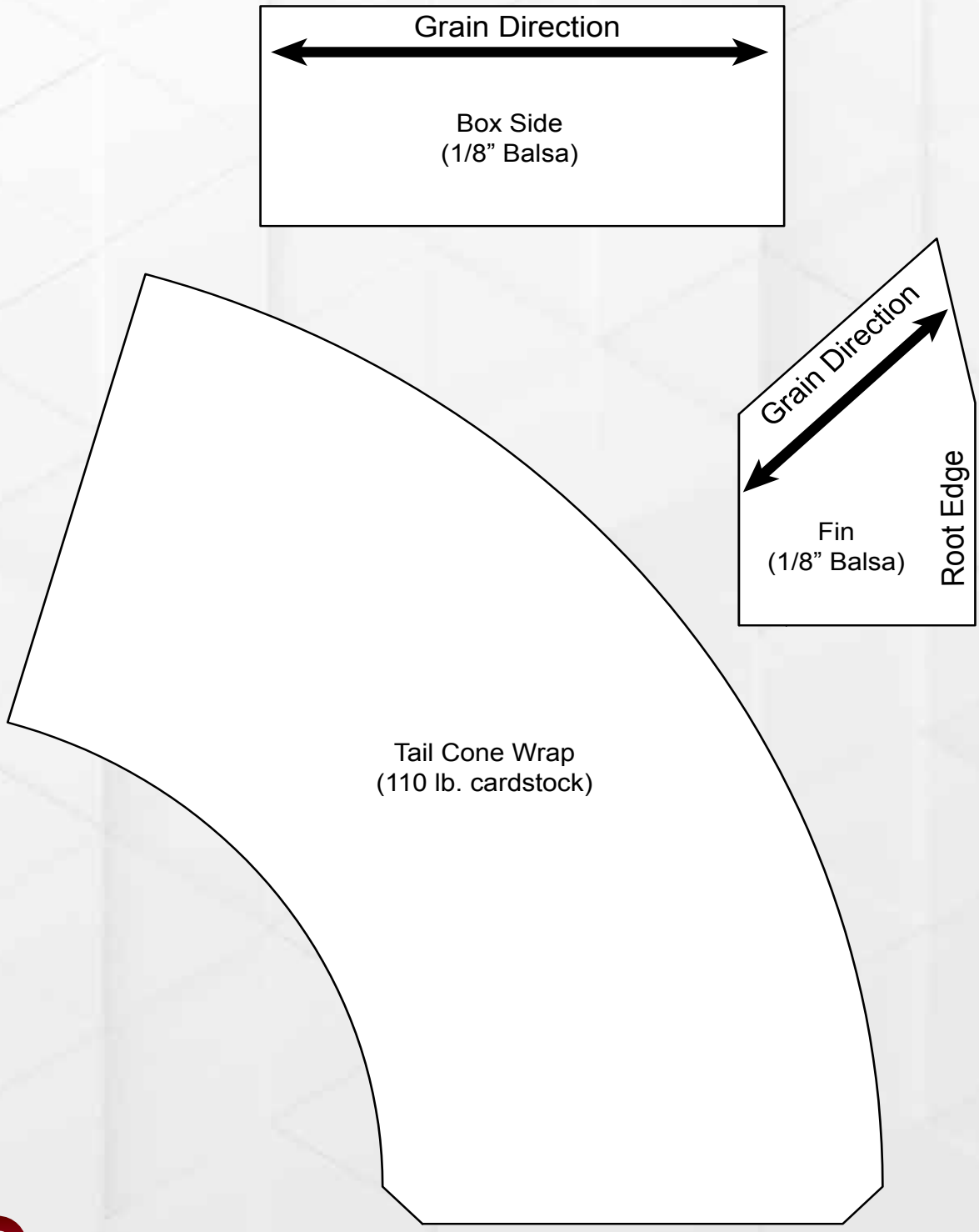

PEAK OF FLIGHT NEWSLETTER

Issue 612 / November 7th, 2023

Rear Eject Fatman Plan

By Perry Olson

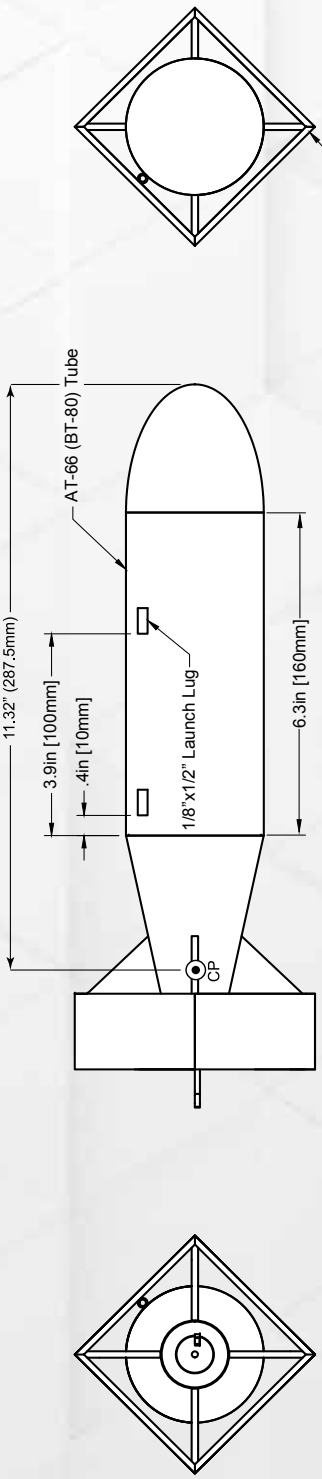

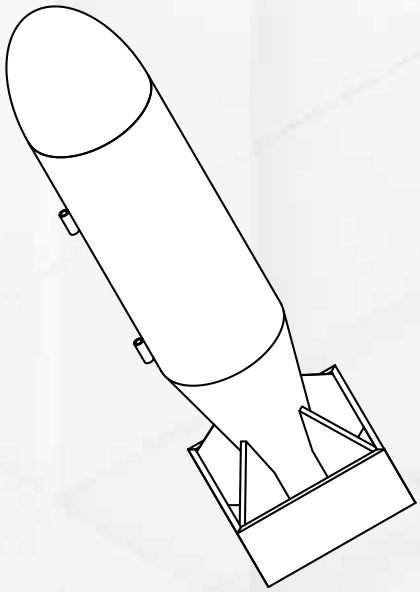

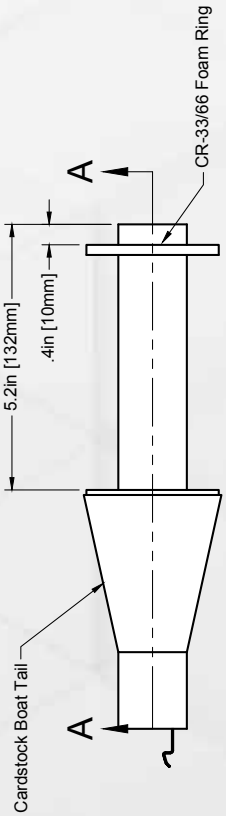

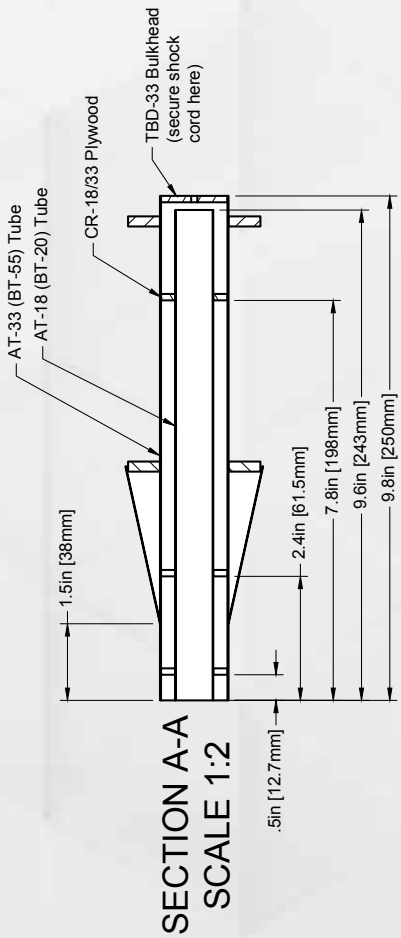

will push on the bulkhead to eject the motor pod. So insert the motor tube until it's sticking out the bottom at a place you are comfortable with (on mine the end of the motor tube is about 7mm out and the business end of the motor hook is about 15mm out). Then look in the top end of the 33mm tube to see where your bulk head needs to go. Glue your bulkhead there.

For the next step you'll need to cut out the cone pattern from the attached pattern sheet on 110lb card stock. Using a table edge, curve this piece to form a truncated cone, then glue the overlapping join tab under the opposing end.

Slide this cone over the end of the assembly you just made. Your goal is to get something like this…

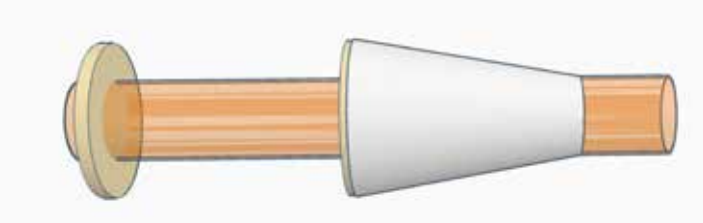

The cardstock tailcone is positioned such that it partially covers the aft centering ring.

you may need to trim the cone to fit. You want the wide end of the cone to overlap the 33/66 foam centering ring just a little, but not completely cover it because some of that ring will need to go inside the 66mm tube later.

Test fit this until you are comfortable with everything and then glue it in place. The bottom of this cone should be in the vicinity of 38mm from the bottom of the 33mm tube.

If you didn't use the screw eye for your shock cord and instead wisely drilled a hole (again, recommended), now is a good time to thread the shock cord through that bulk head and tie a knot on the top side. Bunch up the shock cord coming out of the bottom of the 33mm tube and tuck it inside said tube for now.

Cut a 160mm section out of the 66mm body tube. This will be the main body of the bomb. Test fit the assembly above in this tube and when your happy with it, glue it in place. The top of the cone should meet the bottom of this 66mm body tube.

At this point you can use the old "door jamb" method to draw a straight line on the 66mm tube. I like to line this line up with the seam in the tail cone. You'll be gluing your launch lugs on this line.

So take a launch lug, cut it half and glue one half about 10mm above the tail cone on this line (or whatever makes you happy) and glue the other about 100mm from the tail cone. Make sure they line up!

You can stick the TARC nose cone on now. Don't glue that unless you really feel the need. I like to keep it removable so I can toss an altimeter in there. You'll probably also want to remove the nosecone when painting your rocket because it's flexible and paint probably won't do well on it.

Go back to your pattern sheet and cut out the fin and box side patterns. They have an indicator for grain direction on them. Using those patterns cut 4 each of the fins and box sides from the balsa sheet. I prefer to err on the side of caution and cut these a little oversized.

Sand your fins to make them all the same size and test fit them along the bottom of the 33mm tube and over the tail cone. They should come to the bottom of the 33mm tube and be flush along the edge of the cone as well. When you're happy with the fit, glue them on at 90 degree angles from each other (standard 4 fin layout) making sure the launch lugs are exactly between two of the fins.

You want something like this…

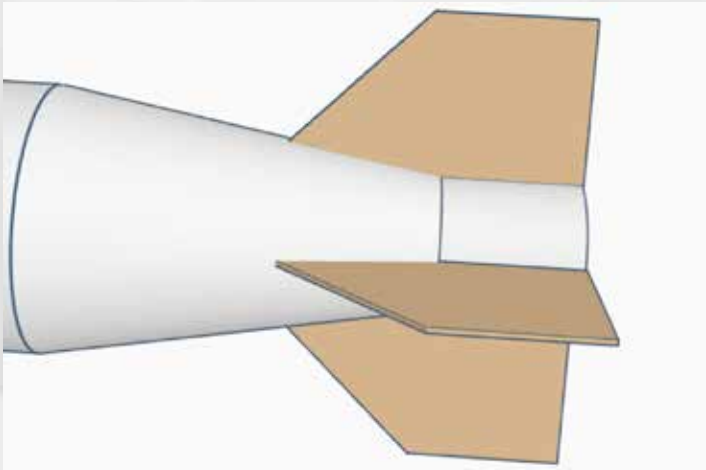

Fins mounted to the rocket and secured to the core (33mm) tube as well as the tailcone.

You can now form a box with the box sides either by making the box first then sanding the fin corners down so that it fits, or by putting one edge at a time across two fins, gluing it in place, and moving to the next box edge. I did the box first then sanded the fin corners to fit, but either method should work. In the end you want this…

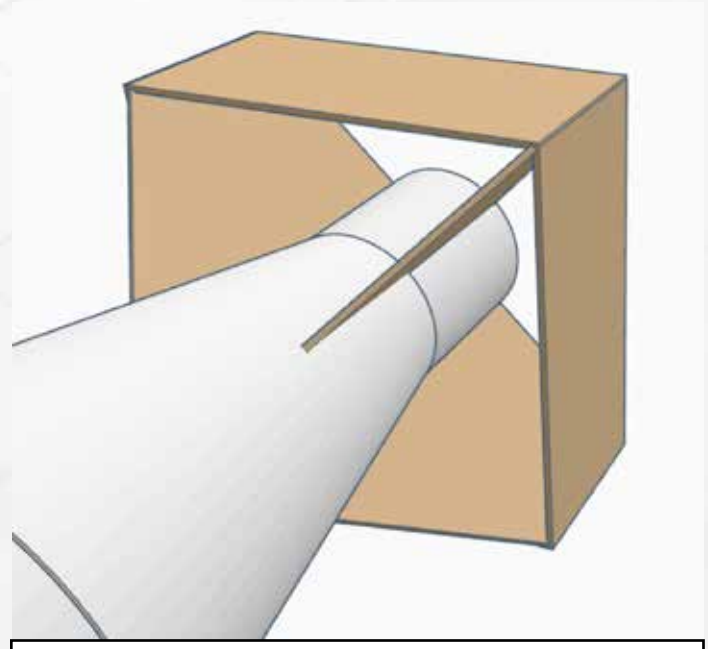

Box sections added to the rocket. The mating edges of the fins and box sections should be sanded at an angle to ensure a solid assembly.

When all this is dry your bomb is assembled. Time to paint!

I went with green, of course, and didn't paint the TARC nosecone. You can paint it whatever color suits your heart's desire, though. That's part of the fun.

The finished rocket with the motor pod, recovery parachute, and shock cord visible.

When the paint is dry, pull out the shock cord and attach the parachute to the end using the method that makes you happiest. I formed a loop at the end of the shock cord and put a Quick Link (P/N 29620) on my parachute so I can easily remove it later.

Loading the rocket for launch.

This rocket is a little tricky to load. First of all, you don't need wadding. None of the recovery equipment should come in close contact with the hot gasses. The end goal of the loading process is to have a motor pod that fits loosely inside the 33mm tube. Not so loose that it falls out, but not so tight that it can't eject.

It's helpful when loading to have a dowel, or bbq skewer, or screw driver or other pokey thing handy.

Here's how you load the rocket:

1) Insert the top of the motor pod into the bottom of the bomb. Make sure the shock cord falls in the notch in that top 18 to 33mm centering ring.

2) Push the motor pod in about 2” to 3”. This will create a pocket between the 18mm tube and the 33mm tube.

3) Fold your parachute so that it fits inside this pocket. You have room to fold it long, you do NOT have room to fold it FAT, so take your time and experiment with this process until you are comfortable. The parachute and it’s associated shock cord should all fit ABOVE the streamer in this pocket. You can fold the chute lines inside the chute instead of wrapping them and you can put the shock cord on the opposite side of the chute. This is where your pokey thingy will come in handy, because you may need to gently stuff the chute in.

4) Fold up the streamer against the 18mm tube.

5) Continue pushing the motor pod in with the chute and streamer until it’s up against the bulkhead.

6) Load a motor in the motor tube.

Final Considerations and suggestions

Use the TARC nosecone specified in the parts list. This foam nosecone provides some extra cushion needed for a rocket that lands on its nose every time. According to RockSimthe CP is 11.32” 287.5mm) from the tip of the nose cone. The center of gravity with a C6-3 should be about an inch and a half to two inches higher. I used the swing test to verify stability and didn’t need to add any weight to the nose. And if flew straight and true on a C6-3.

Good luck and happy flying!

You can download the RockSim file here:

https://www.apogeerockets.com/Peak-of-Flight-Rocket-Plans

ABOUT THE AUTHOR

Perry Olson also wrote an article for the *Peak-of-Flight* Newsletter #551, titled, “Building the MK 82 “Snake Eye.”

https://www.apogeerockets.com/education/downloads/Newsletter551.pdf

NEED A PARACHUTE?
APOGEE HAS THE ONE YOU’RE LOOKING FOR!
www.ApogeeRockets.com/Building-Supplies/Parachutes