ISSUE 81 - MAY 17, 2002

APOGEE
PEAK OF FLIGHT
NEWSLETTER

sci-fi thriller:

The Secret SR-72 Darkbird Missions

feature article:

Launching Rockets in Space

spot light article:

Mercury Transport

last chance:

Rocketry Essay Contest
$150 in prizes!

websites of the week:

The Next Generation of NASA Shuttles

three body problem:

How To Hit The Moon With a Model Rocket

APOGEE COMPONENTS
1130 Elkton Drive, Suite A
Colorado Springs, CO 80907 USA
www.ApogeeRockets.com
orders @ApogeeRockets.com
phone 719-535-9335 fax 719-534-9050

ISSUE 81 - MAY 17, 2002 APOGEE
PEAK OF FLIGHT

The Secret SR-72 Darkbird Missions

{Ed -- This document has been circulating around the internet recently. It appears to be a briefing by CIA aircraft pilot for a member of the Senate Arms Services Committee.}

Senator, I know there are many taxpayers that are wondering about the SR-72 Darkbird, and its secretive missions. I'll leave it up to you to decide what information to release to them, but I'll give you a little history of the plane. I'll follow this with a briefing about the type of top-secret missions we CIA pilots performed, and conclude with our recommendations about the bill that has come before the Senate.

You may know about that other aircraft called the SR-71. It was a fast plane - with speeds around Mach 3.3. With the SR-72, the original objective was to fly even faster, and to be in the air longer without having to perform mid-air refueling.

The SR-72 was designed the a CIA front company called Apogee Components. The development of the black program was hidden quite easily in the CIA's budget. Until recently, you might not even have known it existed. The first flights of the aircraft took place in the early 70's over sparsely populated island chains in the Pacific Ocean. To this day the airplane's top speed is considered a national secret. But let's say it is well over Mach 4.4.

Suffice it to say, it is very difficult to reach these speeds without the assistance of rocket power. That is why the core module of the SR-72 houses the powerful and ultra-efficient J7 rocket engine. It is a remarkable engine, as it is able to use atmospheric oxygen that is ducted in from the two outboard engine cowlings. This saves a lot of weight, since separate oxidizer is not needed for the rocket power portion of the flight. This allows the plane to carry much more fuel, giving it the loiter time over the target that is required for many of its missions.

As you know Senator, the old SR-71 did not carry armaments, whereas, the SR-72 is a CIA airplane, it does. The primary weapon is a large Bolaero/Z Air-to-Space missile. Because of the high launch speeds of the SR-72, the missile can reach targets that may be in geosynchronous orbit.

Initially, early missions of the plane where to take out "ORANGE Country's" space launchers. You probably remember that the success rate of those launches appeared to be dismal. Most people thought that the "ORANGE Country's" space program was run by a lot of incompetent engineers. But in actuality, we took out the launchers with air-to-space missiles fired from the SR-72 Darkbird.

That's why the need for extra speed was critical. We'd loiter over the mountains waiting for a rocket launch. If everything went right, we pilots would get a message from CIA headquarters about the countdown. As you know, it was part of the CIA's job to have intelligence agents on the ground monitoring all their launches.

If the launch looked imminent, we'd ignite the J7 rocket engine to full thrust. It was a real kick in the butt as I'd burn through the upper layers of the atmosphere and try to be in a position to launch my own air-to-space missile. Our objective was to get a good run on the rocket just as it cleared 30,000 feet. The faster we went, the greater the possibility of a successful termination, since the window of opportunity was so very short.

We SR-72 pilots weren't successful every time, but we hit enough of the rockets in the first few months of operation to make their space program very expensive. Because of this, they had to divert money from other military programs. It was a double bonus for our side.

Did "Orange Country" know what we were up to? You

cont. on pg.3

The Secret SR-72 Darkbird Missions

cont. from pg .2

bet. Once we ignited the J7 engine, we were very easy to track. But by that time we were already chasing their rocket. And yes; they did all types of things to try to circumvent our plans. Launching decoy rockets worked for a while, so did having a fake countdown. But a lot of times, we knew they had limited launch windows for their rockets, so those missions were a bit more successful.

We never went after manned vehicles; and they knew it. It would have drawn too much attention to their space program. People would have demanded answers, and we might have ended up exposing our own SR-72 aircraft.

They couldn't protest against our flights publicly; probably because they couldn't face their population with the news that we had a plane capable of such performance. They took great pride in their aviation industry, and they just couldn't admit they weren't able to create a plane with similar capabilities.

Also, until 1994, it was a federal crime to take any photographs of the SR-72, so the "Orange Country" had no idea what the plane looked like, nor how big it actually was. While the SR-72 has a similar shape to the SR-71, it is a much bigger aircraft. It is almost twice the size!

It was a very stealthy aircraft while operating under normal scram-jet power; although it is a bit noisy. But flying up above most of the atmosphere muffled the ground noise to a significant extent. But once we ignited the J7, we were very easy to spot on radar, and with infrared tracking systems.

By around late 1974, the "Orange Country" had developed significant countermeasures that made our missions nearly impractical. They figured out how to stage their rockets at critical times in the flight, which would present multiple targets to the missile we fired at them. This would confuse the missile's guidance system, and it usually went after the large portion of the rocket. Obviously, that was the wrong part as far as we were concerned.

Senator, now I'll get to the part about the aliens.

On April 1, 1975 an Air Force F4 Phantom jet mysteriously exploded while operating a routine training flight over Colorado. That is what the news reports said anyway. But another F4 flying in formation witnessed what happened. A Unidentified Flying Object swooped down on the first F4, and launched some type of hi-speed projectile. After that plane was destroyed, it came after the second F4. It was also hit by a projectile, but the pilot was able to eject successfully.

To this day, we don't know where the UFO came from. But this was a far bigger national security threat to us than "Orange Country." We are dealing with an advisory that is much more technologically advanced than we are. So we ceased SR-72 missions to destroy "Orange Country's" space launchers.

Heck, Senator, we knew that our entire planet was at risk. So we devised a plan to get the assistance of "Orange Country" to aid us in defending humanity.

Do you recall that link-up of astronauts in space in 1975? It was the only way we could think of to share information with "Orange Country" about the threat from the aliens. To our knowledge, they hadn't yet encountered the aliens; so we needed proof that they existed.

Some crazy scientist at Apogee Components figured out that the aliens would be monitoring that space link-up mission. And sure enough, they did show up. It was profound evidence, and we were able to convince "Orange Country" that the threat from the aliens was real. That day was the beginning of the end of Cold War.

Senator, it was pure luck that we did have the SR-72 Darkbird in our arsenal at the time. It gave us some limited defense against the aliens when they flew down into our atmosphere. It was fast and maneuverable enough to chase away

cont. on pg.4

ISSUE 81 - MAY 17, 2002

APOGEE

PEAK OF FLIGHT

The Secret SR-72 Darkbird Missions

cont. from pg. 2

the alien UFOs. We haven't been able to shoot any of them down, but we are getting close to that point.

The scientists at Apogee Components are working on some new weapons that they think will be able to terminate the UFO threat. That is why you need to spend money on their non-military rocket vehicles; so they can funnel the profits into the black programs the CIA has them working on. Senator, they're doing great things for our planet, and they need to be rewarded for it.

Senator, this gets us to the legislative bill coming before congress this week. As you know, this bill would authorize; or rather "force" NASA to send astronauts back to the moon. In the CIA's opinion, this would be a terrible mistake. We know the aliens are out there in space. We can defend ourselves when they enter our atmosphere; but we cannot defend astronauts when they leave low earth orbit. They would be sitting ducks for the aliens.

So Senator, it is our opinion that the US population would be horrified if our astronauts were blown up on their way to the moon. It would be better for the time being to kill the bill in congress. You might say that money is better spent giving the elderly more health care.

As you might guess Senator, the alien threat has been a reason why NASA has not sent men to the moon since 1972. There has been a lot of pressure from space geeks, but the CIA, acting with previous administrations have been able to thwart those efforts up to now.

We fully expect that we'll develop a way to protect the astronauts in the future, but for now, we can't admit the aliens exist -- not yet anyway.

We need the status quo in place a little while longer yet. We need to continue to send men into low earth orbit to construct the new particle weapon being placed aboard the "International Space Station." It will become our staging point for future operations against the aliens.

But we can't risk going to the moon right now. It might expose everything and send the planet into a terrified panic. If that happens, who is going to pay their income taxes? Without money Senator, we won't be able to pay contractors like Apogee Components to develop the technology to defend our planet.

Senator, please vote "no" on the NASA appropriations bill this week.

Obviously, the above article is pure science fiction. I wrote it myself. (©2002 - Tim Van Millligan)

But the Apogee Components' SR-72 Darkbird model rocket kit is real! And you can own one today.

If you are like most modelers, you like rockets that have a swoopy aerodynamic look to them. The "SR-72 Darkbird" is one such model. It may look like an airplane, but trust me; it's all rocket power.

The stealthy SR-72 aircraft blasts off on rocket power,taking you along on its super-secret mission. It is a awesome launch, capable of defending our planet against those pesky alien invaders. And when its mission is completed, it glides gracefully back to the ground; ready to take on the next advisory. You'll like flying it again and again.

order one today at:

http://www.ApogeeRockets.com/SR72_Darkbird_Kit.asp

Specifications: Skill Level: 4 - Slightly Challenging
Price: $12.95
Length: 35.6 cm (14.0")
Diameter: 18 mm (0.736")
Weight: 30.0 grams (1.05 oz)
Recovery Type: Glide with a streamer for power pod.
Recommended 13mm Rocket Motors: 1/2A3-2T (first flight), A3-4T, A10-3T,B7-6

APOGEE COMPONENTS
1130 Elkton Drive, Suite A
Colorado Springs, CO 80907 USA
www.ApogeeRockets.com
orders @ApogeeRockets.com
phone 719-535-9335 fax 719-534-9050

Websites of the Week

I've been trying to make this a regular feature of the Apogee rocketry e-zine newsletter. There is so much good information on the internet, that But I keep getting other articles that have more urgency. Since this issue has a orbital mechanics theme to it, I thought it would be cool to review some real space projects.

Recently, NASA put up a web site showing concept drawings of the follow-on rocket to replace the Space Shuttle. This new vehicle is currently under a project called the "Space Launch Inititive." You can find some really neat photos of the concept vehicles put forth by various NASA contractors at: http://www.slinews.com/concepts.html

One of 15 industry concepts. (Boeing)

It is interesting to note that nearly all the new concepts are winged vehicles; much like the current Space Shuttle. If you're a builder that likes glider rockets, you're going to love this web site. There are lots and lots of things on this page that will give you inspirational ideas.

I've downloaded a couple of the movies from the site. They are sorta neat to see, even though the ones I downloaded didn't have any sound.

Our second site on this weeks list of ones you should take a look at is an article written by Robert Truax. Mr Truax is a noted aerospace engineer, that worked on a variety of the launch vehicles of the 50's and 60's.

In his article called: "The Future of Earth-to-Orbit Propulsion," he gives his opinions on what it will take to lower the cost of placing rockets into orbit. It is worth reading, because it is a direct contrast to the direction that NASA is taking with the Space Launch Inititive.

About winged spacecraft, he writes: "The only justification is the unproven assumption that if the configuration looks and acts like an airplane, it will have operating costs like an airliner's. This is the argument that NASA used for the Space Shuttle, but there was no background of experience to support that assumption. It has been proven to be a very costly error: The Space Shuttle represents a truly marvelous implementation of an absolutely absurd concept. Its development and use have cost some $20 billion-$40 billion, and it has set back economical access to space about 35 years."

It makes you wonder if the Space Launch Inititive will be a success, or if it will be another footnote in the history of rocket programs.

The web site where you can read the entire article is at:

http://www.rocketryonline.com/Search/db_search.cgi?setup_file=Opinion&submit_search=yes&db_id=36

ISSUE 81 - MAY 17, 2002

APOGEE

PEAK OF FLIGHT

Mercury Transport

Article by: Nick Esselman,
Introduction by: Tim Van Milligan

Nick Essleman recently sent me a pretty unusual rocket design called the "Mercury Transport." The picture below shows what makes this design unique. The fin spans the length of the rocket, the middle part of the fin doesn't touch the rocket's smaller diameter tube.

Obviously, this configuration is a violation of the Barrowman Stability Equations that we've all used to find the Center-of-Pressure (CP) of the rocket. But, as Nick describes in his article, he found that the RockSim software is able to calculate a CP location of the design. And to prove it works, he's successfully flown the rocket. Since Apogee Components sells the RockSim software, I really like the article as it points out yet another good reason why you should buy the software. If you don't already have it, you can download the free demo version from the Apogee Components web site at: http://www.ApogeeRockets.com/rocksim.asp

Unfortuantely, due to space limitations in this newsletter, I had to trim the article. The part I cut out was the step-by-step instructions on building the model. Fortunately, Nick did put these on his web site at: http://www.rocketreviews.com/reviews/scratch/mercury_transport_18mm.html On his site, you can also download the RockSim .rkt design file for the model. Take a look, its pretty neat.

The rest of this article is by Nick Esselman.

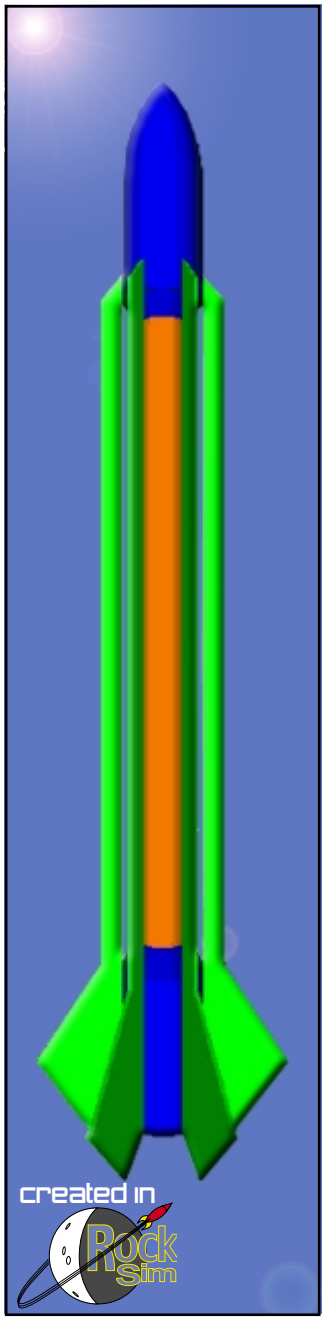

The Mercury Transport is a new design from Essence Aerospace Technologies (EAT). Its main purpose is to transport 4 passengers the 91.8 Million Kilometers to the planet Mercury for observation, study and experimentation in a high temperature, zero gravity, high sun-radiation environment. The Mercury Transport has fins that are suspended over the inner Fusion Proton Rod Reactor Core. The fins are in a test configuration for future interstellar travel and to assist in cooling the core as the ship passes close to stars (such as our Sun). The ship is primarily designed for long distance travel. In fact, 95% of the entire ship is a reactor to allow the ship to travel the distance needed.

I began preparing to build a Mid-High Power rocket with this unique (at least I've never seen anything like it) fin and body configuration. So, in preparation I wanted to build a smaller 18mm prototype to test design and stability. This article describes the assembly and performance of the prototype which turned out to be a nice rocket in itself. There is also a thread on The Rocketry Forum (http://www.rocketryforum.com/index.php?referrerid=35) that I initiated when I started this process.

Before I get into the flying of the Mercury Transport, I want to discuss a new finding for me about RockSim Free Form Fin Design. What I found is that when you go into the Free Form Edit page the point at "0, 0" and the farthest point to the right at "x, 0" are set. In other words the "0" on these two points is the established base line and are not changeable in RockSim. If you go ahead and draw out your fin pattern with the right-most point remaining as the "x, 0" then the fin will "touch" the body tube for the entire length of the root edge. In the Mercury Transports case, the fin spanned across the two different diameters of the tubes and therefore this made the root edge conform to the inner tube as well as the outer tube.

My design was for it to "bridge" the inner

cont.on pg.7

Mercury Transport

cont. from pg. 6

tube, not touch it. To make this work, I had to move the right-most point to be the second point from the left (in my case "0.5, 0"). The third point from the left had to be right above this point (in my case "0.5, 0.001"). By setting this to be "0.001" on the y-axis I was able to create the "bridge". After spanning the inner tube length including transitions I had two points again. One was at "14, 0.001" and the other right below it was "14, 0" which brought the fins root back into contact with the lower tube section.

What difference does it make? Major! The position of the CP with the root touching made the rocket appear, by calculation, to be unstable or marginally stable. With the fin true to design the rocket, by calculation, was over stable. RockSim calculations still had the CP on the rocket, while Barrowman had the CP way off the back of the rocket. Flight proved the stability of the design!

FLIGHT/RECOVERY:

My first flight was on an Estes B6-4. It was absolutely perfect and I can't describe it any differently. Stable and straight. It is a little heavier model so the lift-off is not lightning fast allowing you to enjoy it. At apogee the rocket seemed to hang parallel with the ground and just as it appeared to stop and start down ejection occurred. The 'chute opened and it descended safely to recovery.

The second flight was on an Estes C6-4. Again stable and straight, just higher. At apogee it again was parallel to the ground when ejection occurred. One panel on the plastic 'chute stuck to itself causing less than full 'chute opening. That was okay because it was a little windy and this thing drifted down the length of the field. While reloading the 'chute I squeezed the Cooling Fins a bit too hard and cracked one at the attachment to the upper tube. Not broken through.

The third flight was back on the Estes B6-4 for another repeat of the first flight. This time my 'chute got tangled in my heat shield and did not open. Recovered with no damage.

SUMMARY:

The Mercury Transport has inspired me to press on with my 4" / 2.6" / 4" version. Can you scale up a rocket without impacting CP/CG relationship? Read Apogee's Newsletter Issue 80. (http://www.night.net/apogee/Newsletter80.pdf)

I would suggest that you strengthen the fins by CA'ing or a light paper cover. Whatever your favorite method is. Other than that, I think it is a nice rocket and would love to hear and see any experiences that you have building and flying this design!

About the Authoer: Nick Esselman is the webmaster of Essence's Model Rocketry Reviews (http://www.rocketreviews.com) and has been using RockSim for 4 years. Nick can be contacted at nick@rocketreviews.com

ISSUE 81 - MAY 17, 2002 APOGEE
PEAK OF FLIGHT

Launching Rockets in Space

By George Gassaway & Tim Van Milligan

{Ed. This article first appeared in the January 1991 issue of Space Coast Rocketry. This was a club newsletter edited by Patrick McCarthy and Tim Van Milligan. Some of the acronyms may have changed since 1991, but the laws of physics haven't -- therefore, the idea of launching a rocket in space are still valid.}

Launching a small satellite from the shuttle cargo bay is not a novel idea. But if the satellite was very small, it could be launched with the aid of a model rocket motor.

One method of deploying a satellite is using the Payload Assist Module (PAM) concept.

This approach has been found by NASA to be extremely reliable. It involves pushing the satellite directly out of the cargo bay by springs in the direction of the desired orbit, and then firing a solid rocket motor to boost the payload into an elliptical transfer orbit.

As simple as the shuttle PAM-type satellite deployments are, a model rocket can do the same type of thing for the initial boost phase. The aspect which is not so simple is circularizing an orbit since that would require a second precise firing at the proper time. While that might be possible to do with a specialized small motor and an on-board electronic timer, this article will concentrate on the initial boost phase only.

We make the assumption that the model would be deployed from the payload bay of the space shuttle from low earth orbit. NASA would have to relax the Get-Away Special (GAS) rules to actually allow such a thing, if it were done as a GAS experiment. Otherwise, the only other likely scenario would be to develop an actual scientific mission that would interest NASA in launching their own model-rocket-powered micro-satellites.

satellite vehicle checkout and spin-up sequence initiated

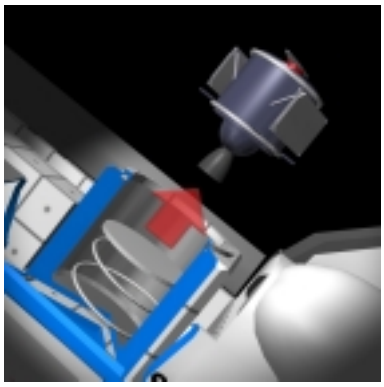

satellite deployment and coast

automatic ingition and spin-stabilized burn of upper stage

As for the deployment, the model rocket would include its own launch platform inside the GAS can.

The launch platform would be disc-shaped, perhaps with extra mass at the rim, so that when spun up it would be spin stabilized.

To alleviate small thrust-line errors in the engine, everything would be spun up fast enough so that any misalignment could be evened out. This likely would require slightly higher rotation rates than PAM-type deploys, due to the small rotational inertia of the engine/payload combination.

The model rocket/micro-sat would be deployed from the shuttle just as a PAM. Also like the PAM, aiming of the micro-sat prior to deployment would be accomplished entirely by aiming the shuttle's payload bay, since the satellite carries no attitude control equipment.

At the proper time and pointed in the proper direction the shuttle would release the model rocket which would slowly rise up out of the bay, and the shuttle would move off. The payload is pushed out of the canister and off the spin-table by a group of springs. The tolerances on these springs must be very critical! If one spring should push harder than the others, the satellite would be aimed in the wrong direction at the time of motor ignition.

An electronic timer (or timed ordinance fuse) in the launch vehicle (i.e. the satellite) would fire the model rocket at the proper time, just as PAM's typically fire 45 minutes after deployment, so that the shuttle is far enough away. The model rocket would

cont. on pg.9

ISSUE 81 - MAY 17, 2002 APOGEE
PEAK OF FLIGHT

Launching Rockets in Space

cont. from pg. 8

minutes after deployment, so that the shuttle is far enough away. The model rocket would go on its way, leaving the launch platform behind.

If desired, the launch vehicle could include a retrofire model rocket motor to bring it out of orbit, so that the payload might be retrieved, or bring it into a lower orbit where it could decay and re-enter the atmosphere in a shorter time (Space junk is becoming a very serious problem, so we would not want to be considered a litter-bug).

The model rocket could be nothing more than a model rocket engine, but it probably would need a special nozzle for vacuum operation, and it would also have to be tested in a vacuum chamber (a air bubble inside the propellant could cause the motor to explode before it is ever ignited).

Except for the novelty of firing a model rocket in orbit, launching the engine alone would not be of much note (unless done as part of a speed record where payload mass would hurt too much). For more performance, it could also be staged.

One possible scientific use of an engine casing by itself could be to hit the moon. If the Apollo seismic sensors still worked and the impact of a 2-3 ounce mass at high velocity could provide a readable and useful result. That's a really CHAD way to try it (although this might require a very close hit though - maybe less than 50 feet). Given the crudeness of how the old Juno-II took pot-shots at the moon using spinning solid powered upper stages, it seems reasonable to believe a model rocket could do it. It might even have a better chance of working since it would have the accuracy of a shuttle PAM type deployment rather than the more error-prone guidance aiming of the Juno-II.

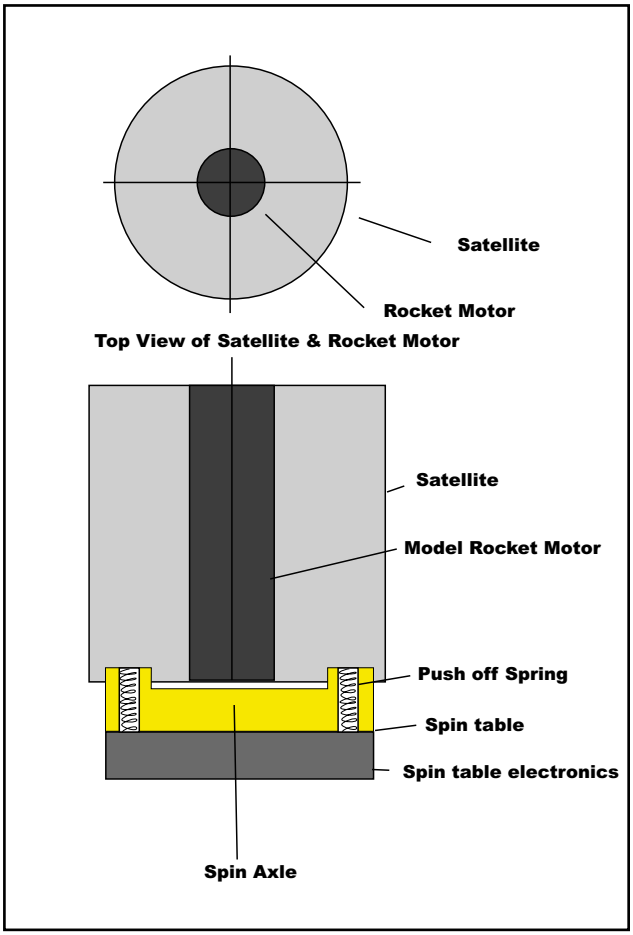

get-away-special launched micro-satellite single rocket motor (no apogee kick motor)

From the equations of orbital mechanics given in the September - October issue of SCR, it is possible to find out the size of the motor needed to put a specific size payload in any desired orbit. For example: to put a payload into an orbit with an apogee at 384,000 Km (the orbital radius of the moon), and assuming the motor is of the advanced composite type (Isp = 2100 m/s), you would find that you would need 1.29 Kg of propellant for each kilogram of payload. So if you had a satellite of 9.75 Kg (21.5 lb), you would need at least a size "N" motor (total impulse = 20,480 N•s). That would be a little too much impulse to send it to the moon though, because the moon would exert a gravitational force that would increase the velocity of the satellite when it got close enough (see sidebar for an explanation of this gravitational effect). It might be possible to use the extra velocity to sling the payload out of earth orbit and into a planetary rendezvous mission.

Regardless of the type of mission, you probably couldn't convince NASA to let you accomplish any mission if the micro-sat would be in a orbit less that 10,000 miles. For orbits under this altitude, you could likely use the tethering technique to place a small payload into that orbit. If you could somehow use the PAM concept launched from a tethered sat-

cont. on pg.10

Launching Rockets in Space

ellite, you could really get some exceptional velocity changes (launching from a tethered satellites is similar to slinging a small stone from slingshot - like David and Goliath).

A model rocket could not boost much of a payload, so payloads would have to be very miniaturized and lightened, or special type of payload and missions considered. NORAD might have trouble tracking something as small as an engine in high earth orbit, especially if it were to leave earth orbit. One possible payload would be to carry an Echo-type mylar balloon. A balloon 1-3 meters in diameter would weigh relatively little, most mass would probably concern the device for inflating it properly without bursting. The aluminized coating would help reflect radar waves very well, making it fairly easy to track (though I have no idea how well it could be tracked beyond a few hundred thousand of miles). If sent off at beyond Earth escape velocity, it could be sent in a general direction within the solar system, early tracking before getting too far could establish its likely course, though it could not be expected to reach a specific target without additional navigational capabilities.

Or could it? If a person is riding in a car moving at 10 mph and throws a ball horizontally backwards at 10 mph, the ball will essentially fall straight down, with no horizontal motion in respect to the ground. Now imagine the earth being the car and the rocket being the ball. If the rocket is fired at the proper point in Earth orbit, it could be made to in effect be "thrown backwards" from the Earth's orbit around the sun, in relation to the sun it would accomplish a major retrofire action that would result in a net orbital velocity around the sun of near zero. That done, it would pretty much fall straight towards the sun. I know the orbital mechanics are a bit trickier than that such that leaving the Earth would have to take into account the Earth's gravity until it gets out of its influence, but it seems not to be too difficult for someone to figure out. This approach would seem to allow a large enough margin of error for too little or too much performance by the engine so that it would still have a good chance of going into the sun.

Guess it could the called the "Solar Minimum Mission?" What scientific purpose? I don't know. Perhaps as little as being able to say a manmade object hit the sun (or more accurately was enveloped, vaporized, etc.). When an early lunar shot missed the moon a big deal was made out if becoming the first manmade object to fly past the sun. But I don't think anything has actually gone directly towards the sun.

Oh well, some pretty wild stuff. There might be some very good uses for a model rocket in orbit but none of the right people are thinking about anything like that. Possibly a bit like the laser, nobody knew what to do with it when first created, but there have been many uses developed.

So, there it is. The Getaway Special that really gets away.

Rocketry Essay Contest
$150 in prizes!

There is still time left, and since only a few entries have come in, you're odds of winning the prize is pretty good.

Shrox has been creating some awe inspiring rocketry artwork in the Apogee e-zine newsletter. You see examples of it with the free rocketry plans. I thought that the story behind the artwork is missing. For instance, what is the story of the rocket, and how did it get to the point where it is shown in the picture?

To find out, I'm holding an essay contest. Pick a rocket picture from the list below, and write a fictitional story about it. I know you daydream about these rockets, since I do it too. So just write down your story and send it in for your chance to win a cool prize!

SHX/TVM-01 - newsletter #73
Stonebreaker/AX - newsletter #75
Bolaero/Z - newsletter #76
Orion Luxury Shuttle - newsletter #78

There will be two age divisions: 17 and under, and 18 and older.

First Prize: $50 Apogee Gift Certificate
Second Prize: $25 Apogee Gift Certificate
Guidelines:
Maximum word count:1000 words.
Deadline for Entries: May 17, 2002
Format: electronic *.txt files.
Email the stories to: tvm@apogeerockets.com

Apogee Components reserves the right to re-print the essays in the free e-zine newsletter so that other readers can enjoy the stories too.

Three Body Problem

By Tim Van Milligan

The trip to the moon is more complex than tossing a object into the vicinity of the moon. The problem is termed by astrodynamicist as a three-body problem although, more correctly it would be the multi-body problem because in many cases there is more than three masses exerting a force on the body in question. With the help of some text from Principles of Astronautics by M. Vertregt, I will attempt to show the different forces acting on a space ship traveling from the earth to the moon.

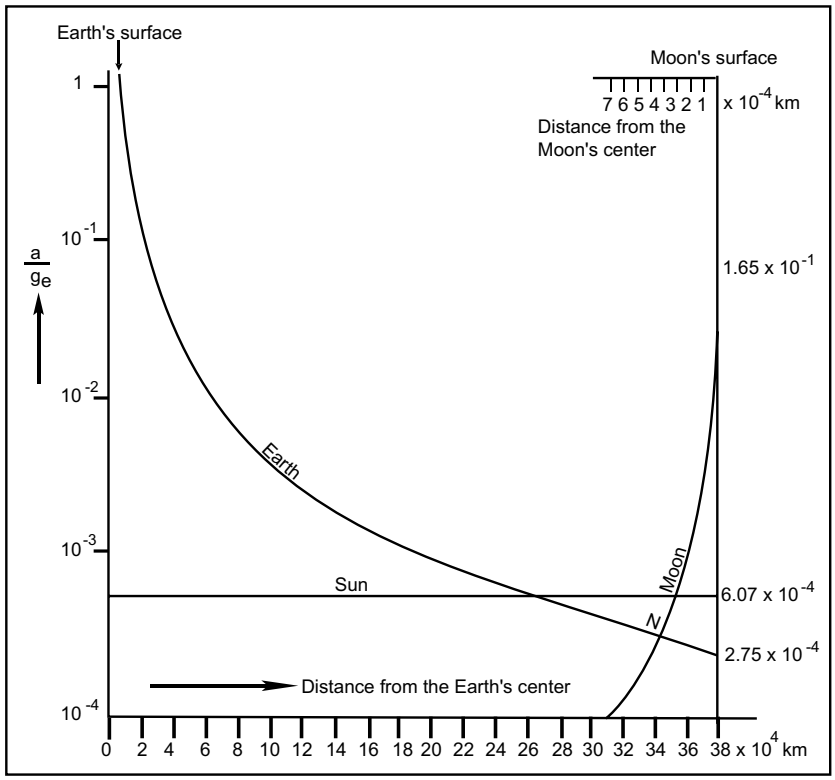

In figure 1 the accelerations caused by the forces of attraction of the Earth, the Sun, and the Moon on a space ship, are shown as fractions of the acceleration on the Earth's surface (go).

We can see from this that the attractive force exerted by the Sun on Earth's surface is only about 1/1600 of the force of attraction exerted by the Earth. At a distance of about 260,000 Km (161,500 miles) from the Earth, the Sun's attraction is equal to that of the Earth, and the Moon's attraction is still about 100 times smaller.

At a distance of 346,000 Km (215000 miles) from the Earth and 38,000 Km (23,600 miles) from the Moon, at what is called the neutral point N, the attraction exerted by the Earth is equal to that exerted by the moon (this is not L1, one of the five Lagrange libration points; L1 is actually located 58,000 Km from the Moon's surface). The two forces are here in equilibrium, but one must not assume that there is no attractive force in this area, because we can see that the Sun's attractive force at this point is almost twice as large as that of the Earth or of the Moon, taken separately

At a distance of 30,000 Km (18,600) miles from the Moon, the attraction exerted by the Moon is equal to that of the Sun, and much greater than that of the Earth, and at a slightly greater distance from the Moon's attraction begins to predominate. At the Moon's surface the gravitational force is about 1/6 of the gravitational force on the Earth's surface. The Sun's attraction remains approximately constant during the entire trajectory, and the graph showing the Sun's gravitational attraction remains practically horizontal. In any case, this shows that the space ship is attracted on its way to the Moon not by one body, but by several bodies.

Archives of this Newsletter

All the articles that have appeared in this newsletter are archived at http://www.apogeerockets.com/education/newsletter_archive.asp

ISSUE 81 - MAY 17, 2002

APOGEE

PEAK OF FLIGHT

SR-72 Darkbird - Edge of Space Research Plane

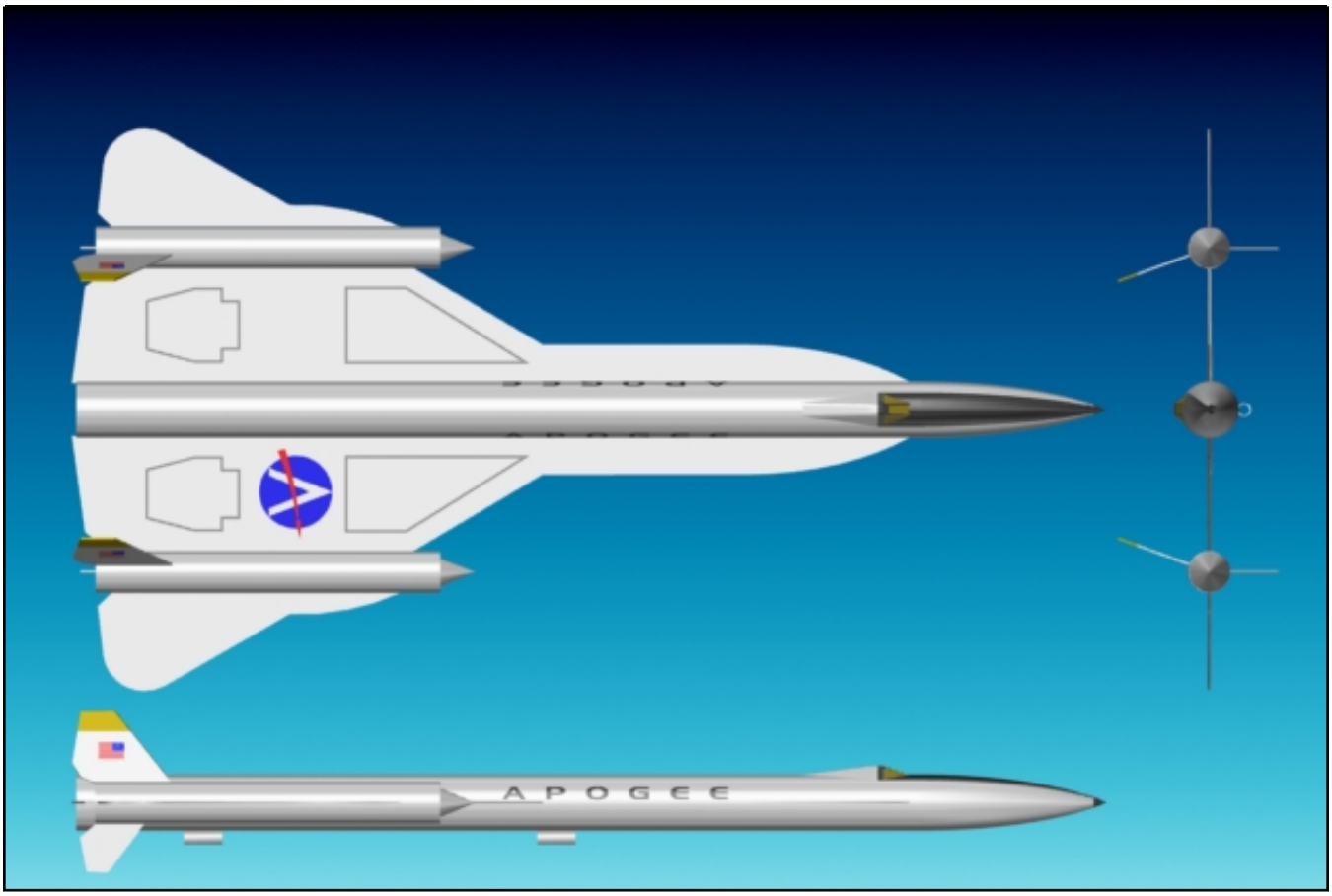

Conduct some high altitude researchwith this decal conversion for the Apogee SR-72 Darkbird.

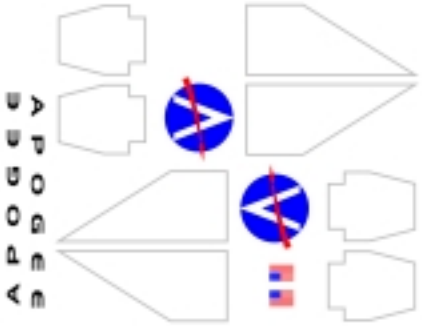

http://www.ApogeeRockets.com/shrox/sr72.asp

APOGEE COMPONENTS

1130 Elkton Drive, Suite A
Colorado Springs, CO 80907 USA
www.ApogeeRockets.com
orders @ApogeeRockets.com
phone 719-535-9335 fax 719-534-9050