ISSUE 95 - DEC. 27, 2002

APOGEE

PEAK OF FLIGHT

NEWSLETTER

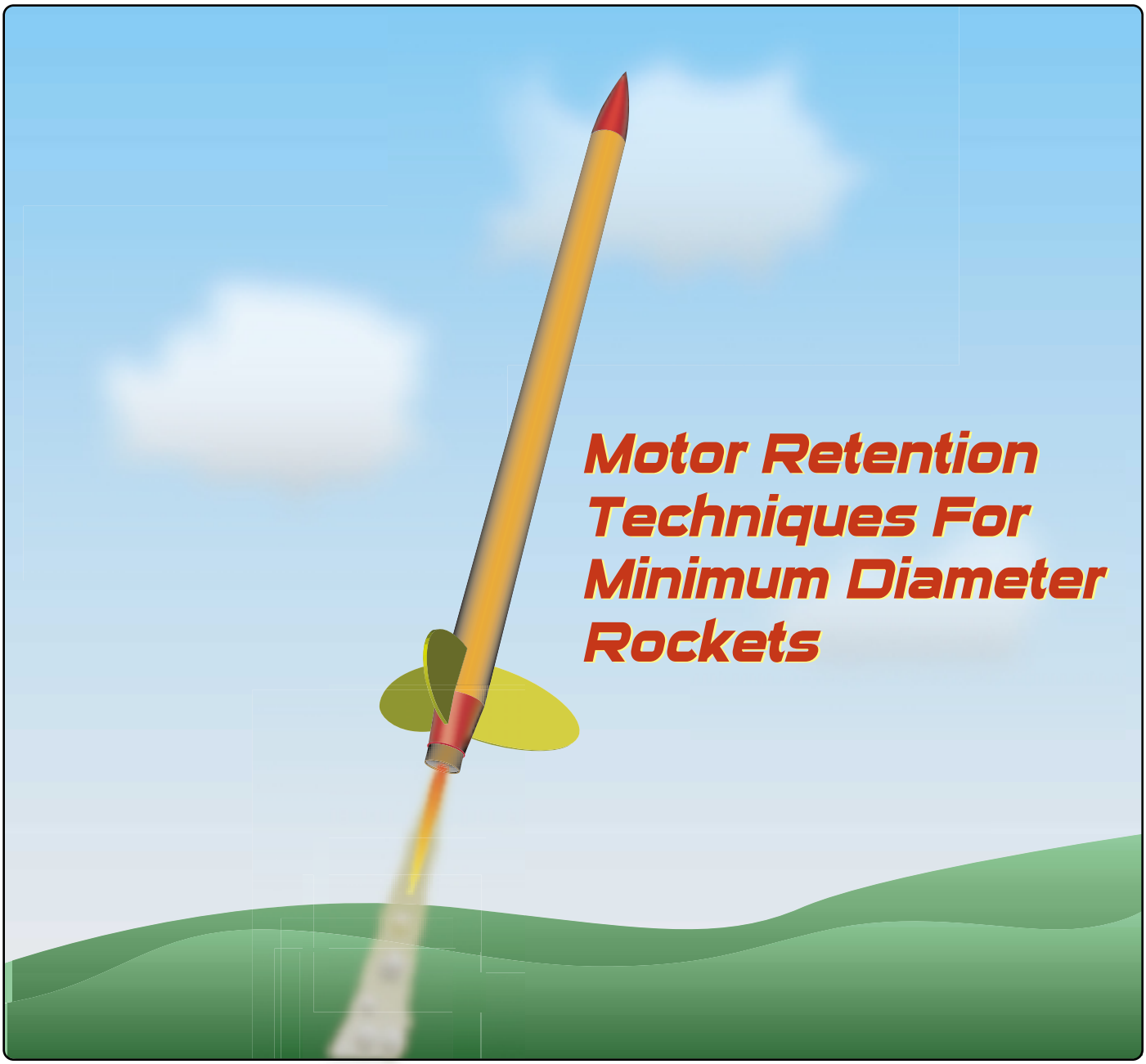

APOGEE COMPONENTS
1130 Elkton Drive, Suite A
Colorado Springs, CO 80907 USA
www.ApogeeRockets.com
orders @ApogeeRockets.com
phone 719-535-9335 fax 719-534-9050

Did You Get What You Really Wanted For Christmas?

If you didn't, CLICK HERE NOW!

EMRR on CD - Just $10!

Introducing Essence's Model Rocketry Reviews (EMRR) second release of "EMRR on CD". For those that have enjoyed EMRR online, now you can have it all, offline and lightning fast on your CD-ROM player. In addition, you can have it a special Apogee Components' Newsletter Price: $10.00 (regularly $15.00). Just click here: http://www.rocketreviews.com/calendar_cd/apogee_emrroncd.shtml

1253 Reviews/Articles
410 Authors
6405 Flight Logs
741 RockSim Files
559 CP Listings
1651 Recommended Motors
1157 Opinions
280 Stories
307 Hints/Tips
156 Rocket Specific Tips
Clay Brothers' VideoRocketry Website Grab (Sept'02)
Estes Educator Website Grab(Sept'02)
A Field Guide to American Spacecraft Website Grab (Jan'02)
FlyHybrid.Org Website Grab (Sept'02)
NAR's Website Grab (Sept'02)
TRA's Website Grab (Sept'02)
Apogee's RockSim Demo Software (ZIP file)
Apogee's RockSim Rockets (CD page)
CompuRoc (ZIP file)
SpaceCAD.com's SpaceCAD Demo Software (EXE file)
SpaceCAD.com's SpaceCAD Rockets (ZIP file) (Sept'02)
VCP (standard and Win98+ Versions) (ZIP file)
WinRoc (ZIP file)
wRASP (ZIP file)
Aerospace Speciality Products Catalog (PDF) (Sept'02)
Aerocon Systems Website Grab (Sept'02)
Apogee's Catalog (PDF) (Sept'02)
ARA Press Website Grab (Sept'02)
Binder Design Website Grab (Sept'02)
Edmonds Aerospace Information Page (Sept'02)
Estes Catalog (PDF) (Sept'02)
Estes Rockets Website Grab (PDF Jan'02)*
FlisKits Website Grab (Sept'02)
Giant Leap Rocketry (Sept'02)
Pratt Hobbies Website Grab (Sept'02)
Public Missiles Website Grab (Jan'02) (Sept'02)
Public Enemy Website Grab (Sept'02)
QuickBurst Website Grab (Sept'02)
US Rocket's Website Grab (Sept'02)
Yellow Jacket Systems Website Grab (Sept'02)
Discount Rocketry Website Grab (Sept'02)
Discount Hobby Center Website Grab (Sept'02)
Giant Leap Rocketry Website Grab (Sept'02)

Archives of this Newsletter

All the articles that have appeared in this newsletter are archived at http://www.apogeerockets.com/education/newsletter_archive.asp

Motor Retention for Minimum Diameter Rockets

By Tim Van Milligan

In the book *"Model Rocket Design and Construction,"* http://www.ApogeeRockets.com/design_book.asp there is a lengthy discusion on how to build engine mounts for model rockets. But what is confusing to a lot of newcomers to rocketry is how to restrain the motor on minimum diameter style rockets. In this article, I'll cover this topic a little bit more in depth.

First, let's review what the engine mount is, and what it does. From the book, "an engine mount holds the rocket engine firmly in place inside the model and aligns it concentrically with the centerline of the model." It must keep the engine from sliding forward or rearward in the rocket. That is what we want to talk about in this article.

To prevent the rocket from sliding forward in the rocket, the typical method is to glue a thrust ring (also called an engine block) into the engine tube. It is positioned directly in front of the motor, so the engine can't slide forward.

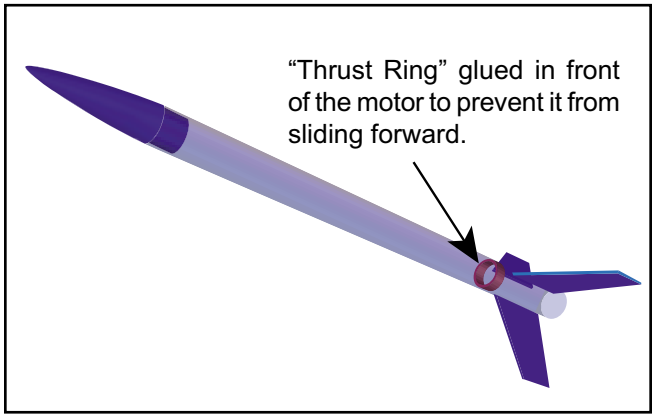

The disadvange of the thrust ring in front of the motor is that it limits you to the size of the engine that will fit into the rocket. For example, a Aerotech G35 Econojet is 3-7/8 inches, while the G80 is 4-7/8 inches long. Both are 29mm diameter, so they would both fit into the same engine mount tube. But since the G80 is one inch longer, it would stick too far out the back of the rocket.

The way around this is to remove the engine block, and put a thrust ring on the back end of the motor. So no matter what length it is, the engine would have plenty of room to slide into the rocket.

All the Aerotech reload cases have this thrust ring built into the motor. But for single use engines, you'll have to add one yourself. The common way is to take 1/2 inch wide masking tape, and wrap mulitple layers around the back end of the motor to build up a ring.

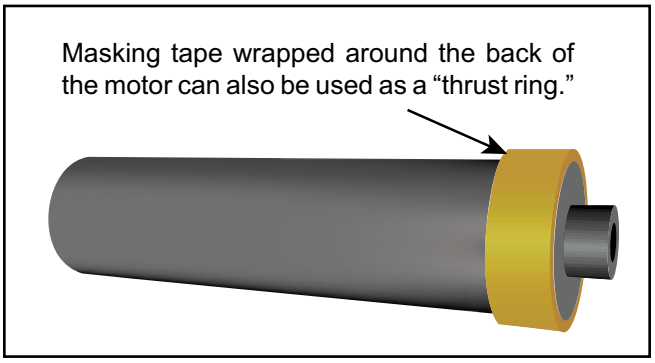

Many people ask, "is a tape ring strong enough to prevent the motor from sliding forward?" The answer is YES!!! It works. Even for a higher thrust motor like the G80.

We now know how to prevent the motor from sliding forward. That's the easy part. How do we prevent it from sliding rearward?

Before we answer that, why is it even important that we prevent it from sliding out the back? After all, when the motor is thrusting, it is always pushing forward, and not rearward.

The reason we have to keep it from sliding rearward is because of the ejection charge. When it fires off, it pressurizes the inside of the rocket. Essentially, it wants to push both the nose off the front and the engine out the back. If the engine were to slide out the back, the recovery device would not deploy. Worse yet, the CG will shift forward, and the rocket will become a high speed projectile coming straight into the ground.

It is therefore very important that the motor be restrained so it can't slide rearward.

Nearly every modeler knows all about the standard metal engine clip. This method works the easiest when the engine is smaller in diameter than the rocket tube. But when the tube is just big enough to fit the motor, the hook would leave a ugly bulge on the outside of the rocket. Plus, it isn't very aerody-

(Continued on Page 4)

Minimum Diameter Rockets

(Continued from page 3)

namic either. So it defeats the purpose of making the rocket as small as possible.

The minimum diameter rocket poses a challenge for the builder. How do you restrain the motor without adding drag to the model?

The first method of restraining the motor is probably the oldest. That is the friction fit. This is simply done by wrapping tape around the outside of the motor.

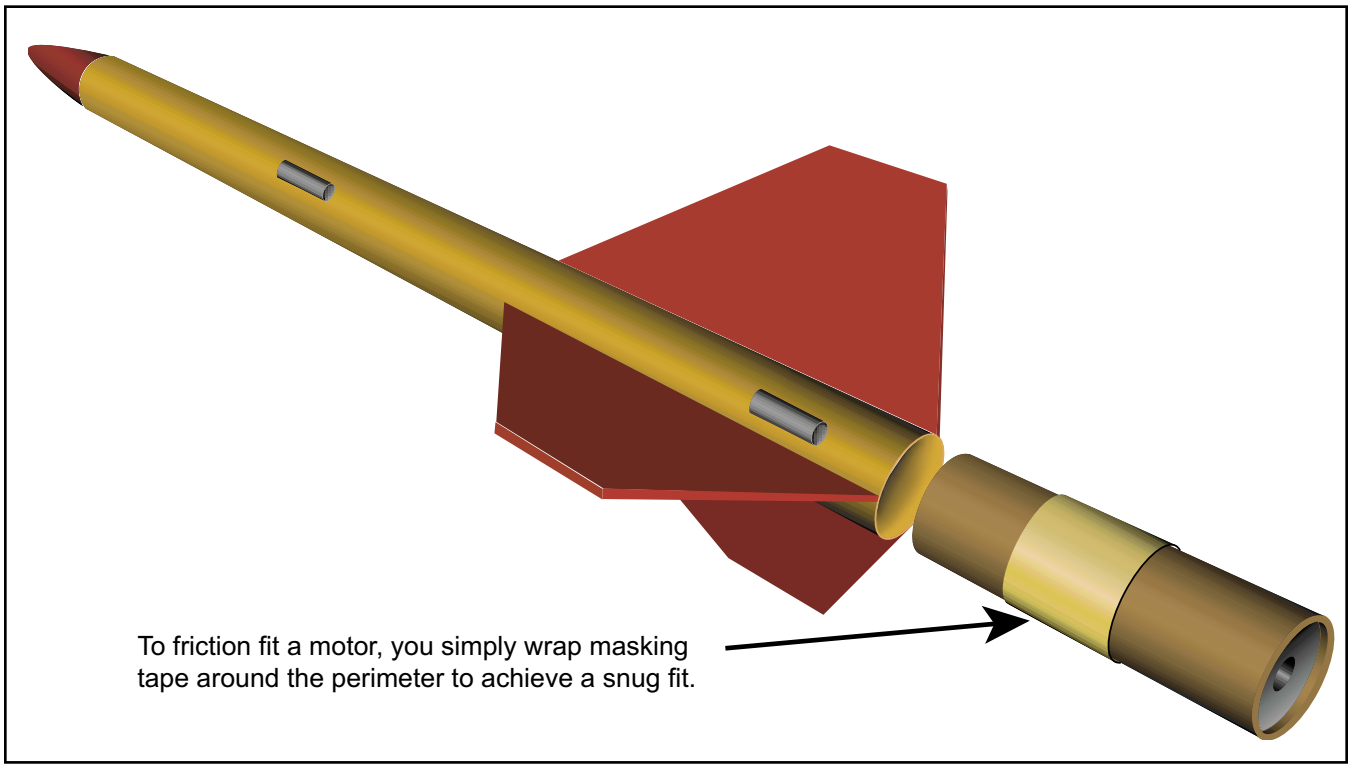

There are a couple of drawbacks to the friction fit. The first is that you never really know if you have enough tape on the rocket to hold it securely. Too many times, it isn't enough. What you hear is a loud pop, and then the rocket comes crashing into the ground with a full head of steam. That wasn't enough.

But too much tape can be a big problem too. The motor case might be difficult to remove after the flight. I've personally ruined a rocket of rockets by trying to get a stuck engine out. Here's what happens that causes the motor to get stuck:

After the motor is done burning, the case starts to get hot. It takes a while for it to get hot, as the heat has to propegate from the inside to the outside. But as is heats up, it may start to expand. This makes it tighter in the tube than when you started.

The first way to solve the problem is to design and build the rocket so the fins are shifted a little bit forward. This leaves a straight section behind the tube where you can wrap tape around the engine to hold the motor in place. See the illustration on the next page.

Again, I've been asked: "does a layer of tape wrapped around the motor really hold it in place?" YES!!! It works fine.

One thing that I like to do is to put a layer of glossy transparant tape on the back end of the tube. This does two things. First, it protects the paper tube from fraying, especially if you have bare tubes because you didn't paint them. So when you pull the tape off and remove the spent motor, you don't remove the top layer of paper off the tube.

Second, when the adhesive on the masking tape holding the motor in the tube gets hot, it gets gooey. So when you remove the tape, the goo is left on the tube. By having the glossy tape underneith, it is easy to clean off the goo residue.

The Lariat Loop

People that fly in rocketry competitions know all about a

(Continued on Page 5)

Minimum Diameter Rockets

(Continued from page 4)

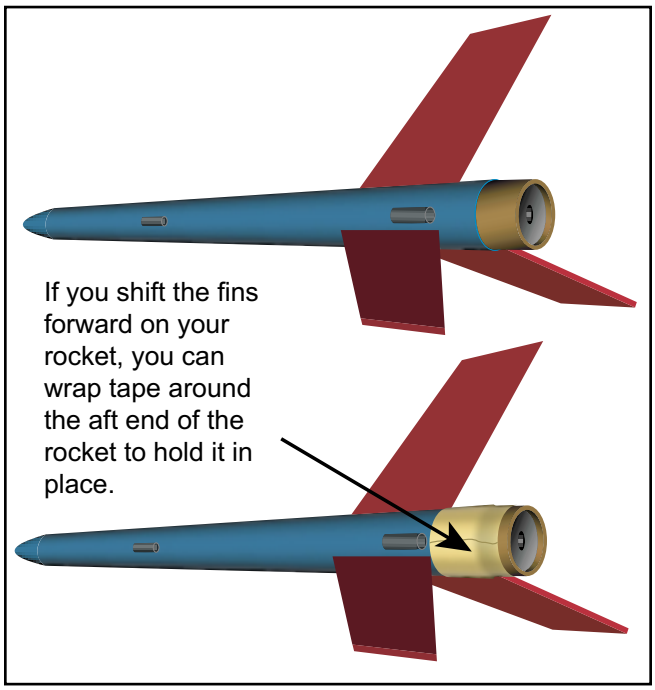

special engine restraint method popularized by Apogee Components' founder Ed LaCroix. In this method, the shock cord is used to secure the motor to the rest of the model. So even if the tape used to hold the motor failed, the motor would not separate from the rest of the rocket. It would remain attached by the shock cord. I've never tried this method with high power rockets, so if you have, let me know if it works.

Typically, this method is used in competition on either streamer or parachute "duration" models. In these rockets, it is desireable to have the body of the rocket hang horizontally during the descent portion of the flight. This increases the drag, making the rocket fall slower. On a altitude model, you probably wouldn't thread the shock cord out the side of the tube as shown in the illustrations below.

How does it work?

The Lariat Loop works like one of those Chinese finger handcuff toys. The harder you try to pull it out, the stronger it becomes.

Since the cord is tied in a slip knot, if the motor tries to slide out backward, the cord cinches down even tighter. There is enough friction in the system to prevent it from sliding out. It doesn't look like it would work, but competition modelers swear by the technique.

An added benefit of the method is that it leaves the inside of the body tube free of any bumps or bulges (like the Estes style shock cord anchor). This helps the recovery device slip out the tube cleanly. This is important when you are trying to stuff a big parachute into a very small diameter tube.

The small diameter of Apogee's Kevlar® thread and 100 lb test-strength cord makes it possible for you to eliminate the need for an engine clip, while still assuring that upon ejection, the engine cannot separate from the model and disqualify your flight. Apogee has dubbed this clipless engine retention method the "Lariat Loop," and the following two figures illustrate it's use. NOTE: Use of a Lariat Loop assumes that the engine protrudes from the model at least 1/4 inch when installed for flight.

1. In line with one of the model's fins, a small hole is drilled through the body tube wall.

2. Pass one end of a 30 inch or longer Kevlar® cord through the hole and out the tail-end of the model.

3. Form a slip-knot (using a half-hitch), in the end of the Kevlar® line running out the tail-end of the model.

4. Now slip the Lariat Loop around the normally exposed end of the motor casing, and cinch the Loop down **tight.** Enough tape should now be added to the motor's exterior to allow for a smooth fit of the motor into the model. **Remember,** pull out the slack that will form in the Kevlar line as you push in the motor.

(Continued on Page 6)

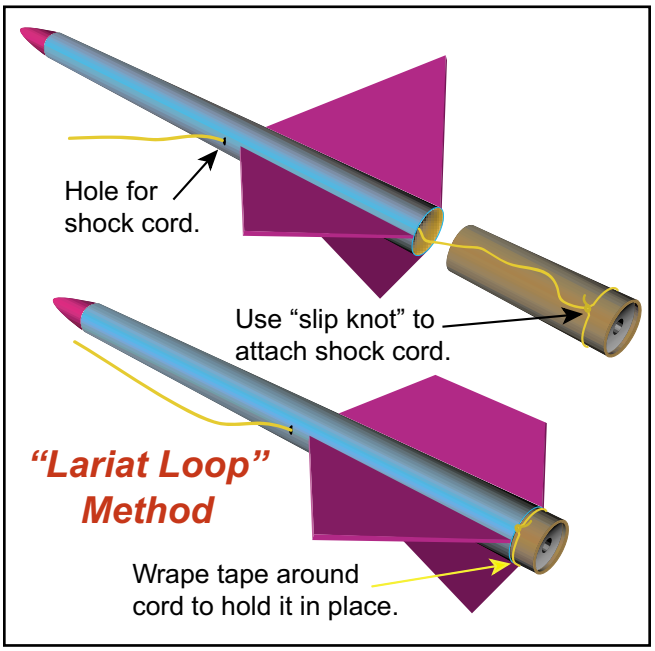

Minimum Diameter Rockets

(Continued from page 5)

external engine restraint

Is is also possible to add an external latch to the model to hold the motor into the tube. What you can do is bend a small diameter, flexible wire in a U shape and glue the ends along two adjacent fin roots. Be sure to square up the corners as shown. See the figure here.

I like to use stranded wire rope that is used in "control line" model airplanes. It has the flexibility that is desired.

When placing the wire rope between fins, make sure that it doesn't pass in front of the nozzle. Otherwise, it will burn through, and it won't hold the motor in the tube. It should be off to one side. It just has to hang over the edge of the motor.

After you glue the wire along the root edge of the fins, you can cover it up with the fin fillet. I recommend the Fix-It epoxy-clay that you can find on the Apogee web site. It will give you a perfect fillet that will streamline the rocket and hide the wire. Plus, it will make the bond of the fins to the tube practically indestructable. You can find the Fix-It epoxy at: http://www.ApogeeRockets.com/epoxy-clay.asp

One other thing that I would recommend is putting a layer of tape over top of the wire where it comes out of the body tube. You don't have to have any on the body tube, but just enough to over the engine itself to keep the wire from shifting around and possibly vibrating off the motor.

You can also create an Estes type engine hook from mu-

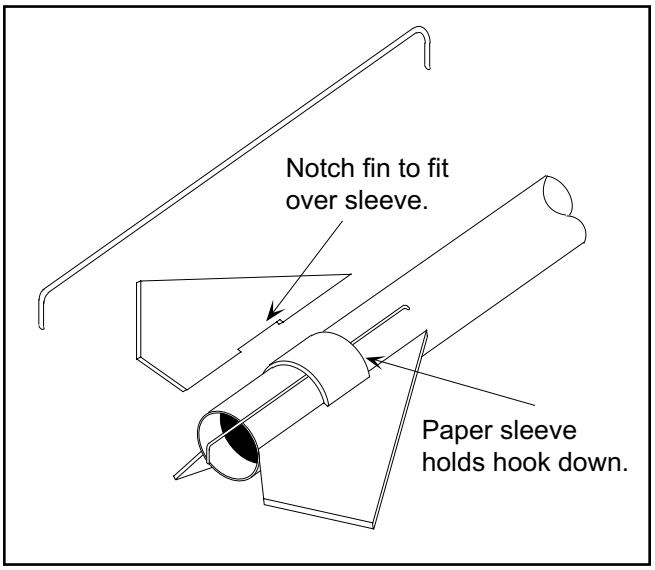

sic wire. It can be held in place by tape or a sleeve on the outside of the tube. But this will require you notch the root edge of the fins to fit over the bulge of the tube.

It should be noted that whenever you use an Estes type engine hook, that you should also glue a engine block into the tube ahead of the clip. That way, the clip pushes against the ring, and won't slide forward.

boattails

The use of boattails presents another interesting problem

(Continued on Page 7)

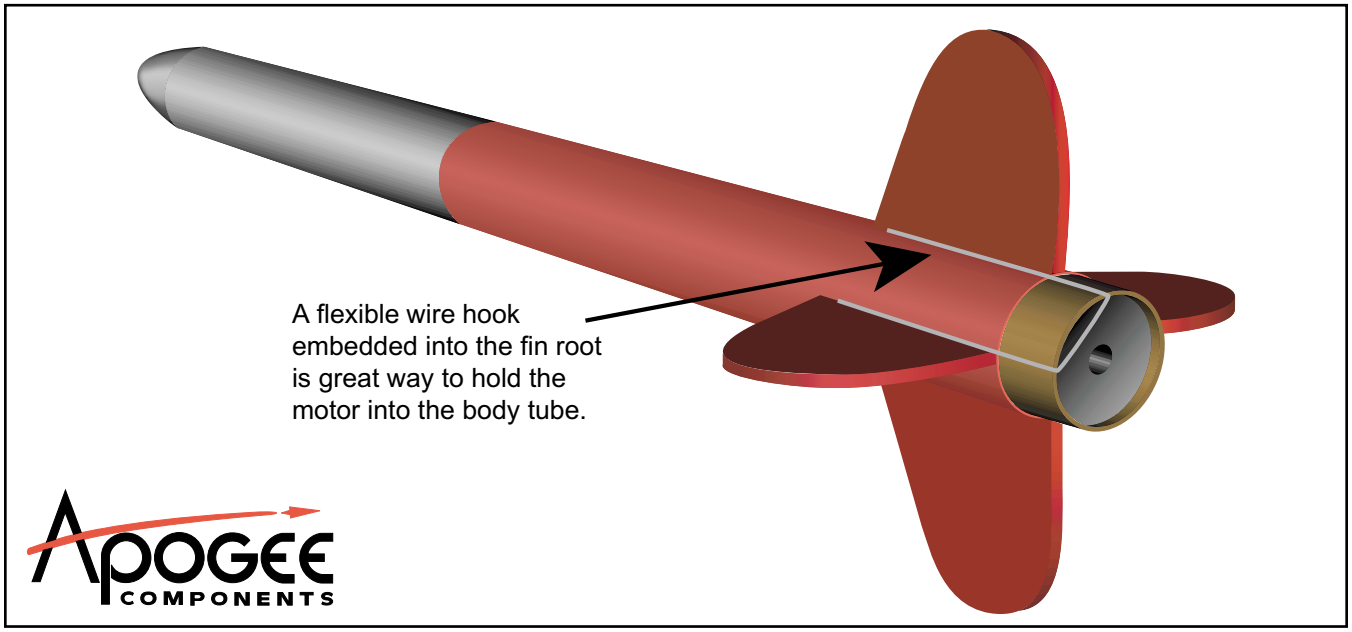

Minimum Diameter Rockets

(Continued from page 6)

for restraining the motor. Your options are very similar to the minimum diameter rocket.

First, you can always friction fit the motor into the tube. But as we mentioned before, this isn't the most reliable method.

For small rockets, you can cut a slot into the boattail to allow an Estes style engine hook to be used. This isn't too hard to do, and still gives you good drag reduction on the model.

On bigger rockets, there is a trend to use the boattail itself to hold the engine in place in the tube. The boattail is prefabricated from aluminium with threads on the front end. A second threaded piece is glued onto the engine tube. So when the two pieces are screwed together, they securely hold the motor in place.

You can find them from a couple of different manufacturers, including both:
http://AeroPack.net
http://www.giantleaprocketry.com

The only slight drawback to these is that the fins can't slip over the side of the boattail like is shown in the previous illustration.

It is possible to make your own removable boattail out of liquid plastic for smaller rocket. It can be molded using the instructions in Apogee Technical Publication #12.
http://www.apogeerockets.com/technical_publications.asp

If you make one up, be sure to let me know, as I'd love to help you sell it.

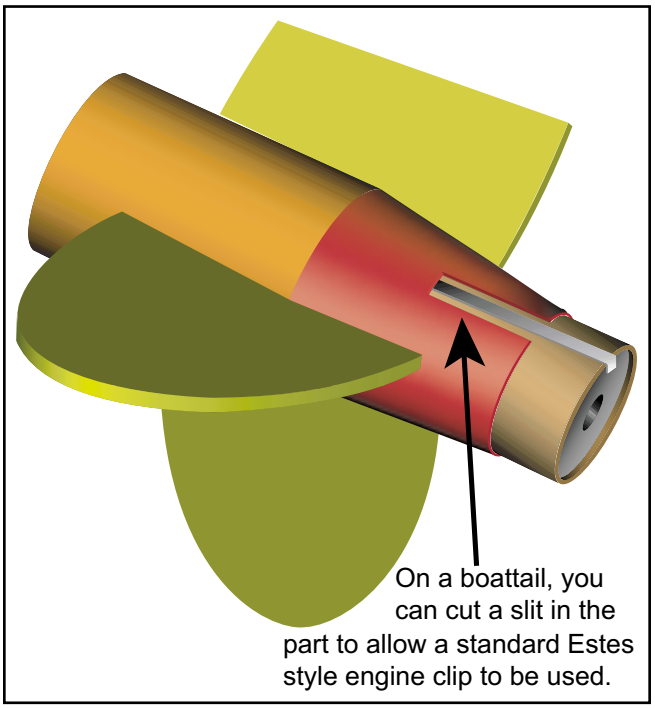

About the Author:

Tim Van Milligan is the owner of Apogee Components (http://www.apogeerockets.com) and the new rocketry education web site: http://www.apogeerockets.com/education. He is also the author of the books: *"Model Rocket Design and Construction," "69 Simple Science Fair Projects with Model Rockets: Aeronautics"* and publisher of the FREE e-zine newsletter about model rockets. You can subscribe to this e-zine at the Apogee Components web site, or sending any message to: ezine@apogeerockets.com with "SUBSCRIBE" as the subject of the message.

FREE Demo Version
Download It NOW!

RockSim Makes Designing Rockets Easy, Accurate, and Affordable

- **Easiest Software To Learn, And Fastest To Use.**
- **Create Templates and Patterns to Build Your Rockets.**
- **Generates The Most Accurate Simulation Results.**
- **Saves You Money By Preventing Design Errors and Launch Mistakes.**
- **Used By More Rocketeers - Because It Is Reliable.**
- **Expandable And Compatible with Other Programs: AeroCFD, FinSim, HyperCFD.**
- **"The Best Value For Your Money!"**

Visit the Apogee web site for more information:
www.ApogeeRockets.com/rocksim.asp