ISSUE 96 - JAN. 10, 2003

APOGEE

PEAK OF FLIGHT

NEWSLETTER

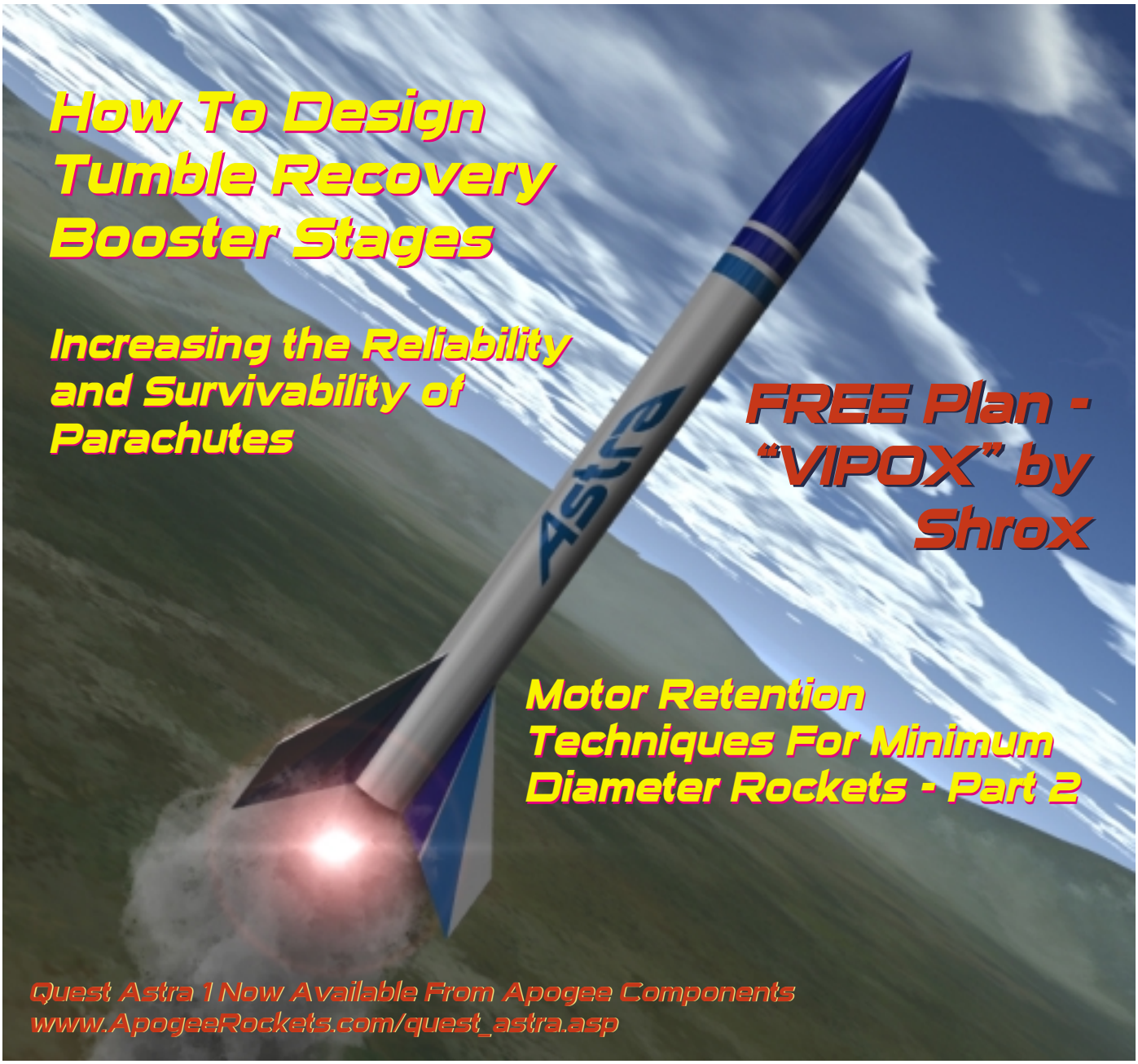

How To Design Tumble Recovery Booster Stages

Increasing the Reliability and Survivability of Parachutes

FREE Plan - "VIPOX" by Shrox

Motor Retention Techniques For Minimum Diameter Rockets - Part 2

Quest Astra 1 Now Available From Apogee Components
www.ApogeeRockets.com/quest_astra.asp

APOGEE COMPONENTS
1130 Elkton Drive, Suite A
Colorado Springs, CO 80907 USA
www.ApogeeRockets.com
orders @ApogeeRockets.com
phone 719-535-9335 fax 719-534-9050

Answers To Your Team America Design Questions

A reader writes:

Our first test flight for our Team America Rocketry Challenge proceeded well. Our flight worked beautifully, all engines lit and it staged perfectly. However, at ejection the plastic parachute parted company with its kevlar® shrouds. Do you have any suggestions?

I had a hunch that sooner or later teams would discover that recovery of the eggs is just as important as the launch. After all, even a slight crack in an egg will get you disqualified. Your rocket has to come down perfectly, or all that effort you've put into the precise altitude will have been wasted.

As mentioned in Newsletter #90, you have to spend time practicing your parachute folding techniques. If you overlook this, you'll pay the price when your eggs get scrambled. I know many competition modelers that will spend hours just practicing and practicing the folding of parachutes. They know that if the parachute doesn't open fully, they probably won't win the contest. You should spend a lot of time practicing too.

Two eggs are very very heavy. And if the rocket doesn't deploy at the proper moment, the opening forces acting are likely to tear the canopy to shreds. You have to have a strong parachute that can take these opening forces.

There are a couple of things you can do. First, I would recommend running the shroud lines over the top of the canopy as shown in the book *Model Rocket Design and Construction.* (http://www.apogeerockets.com/design_book.asp) It will give you extra strength to the chute without adding much weight. But, it can make the chute a bit bulkier, and it becomes more prone to being tangled. So you'll need to spend extra time practicing folding techniques.

Also, you might want to add a few more shroud lines to the chute too. That will distribute the load better over the surface of the chute, so that there is less force on any given suspension line. I've seen modelers use as many as 48 suspension lines on a chute. This may be overkill, so the actual number you'll need is something you'll have to experiment with.

In most parachute events, you want the parachute to snap open quickly. But in this event, I think it would be better for the parachute to open more slowly. If the parachute unfurls slower, the opening forces are reduced.

How do you pack a chute so that it opens slower? That is a good question. You might try wrapping it in a piece of wadding so the outer paper has to come off first.

Or you may wrap the suspension lines around the outside

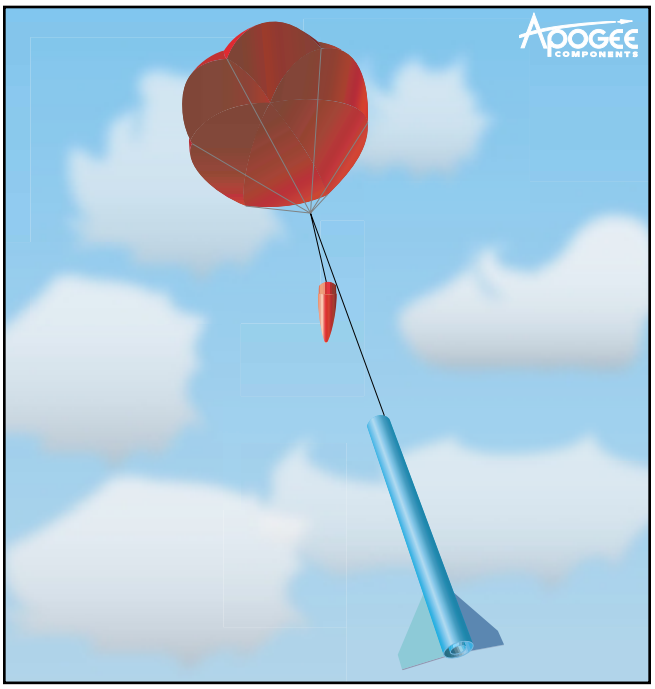

of the folded canopy. Then the shroud lines will have to unwind first before the air makes the canopy blossom open.

But this is tricky. If you roll/wrap it too tightly, it may not open at all. I suggest playing with different folding techniques to see which one gives consistant and reliable results

A more complex strategy might be to try some type of dual-deployment scheme. This is often used with high-power rockets, so the rocket doesn't drift too far downrange. Basically, you release a streamer (or just the nose cone) at the apogee point in the trajectory. This destabilizes the rocket and it falls horizontally for quite a distance. As the rocket gets closer to the ground, the main parachute is deployed by some type of altimeter/computer. The rocket then falls slowly for a nice soft landing that is desired to protect the payloads.

Can you recommend a source of good quality Mylar® chutes?

Here are two sources for thin mylar:

Aerospace Specialty Products: http://www.asp-rocketry.com

"Totally Tubular": http://www.sligar.com/buyrockets/tt.html

Mylar® is a registered trademark of E.I. du Pont de Nemours and Company for its brand of polyester film.

How To Design Tumbling Booster Stages

By Tim Van Milligan

This article is about multi-stage rockets. We're going to talk about the first stage of such rockets, which are called *booster stages*.

When you are flying a multi-stage rocket, these lower section(s) drop off and often do not have any recovery devices in them. These booster stages still need to descend to the ground is a safe manner. In small and mid-size rockets, the simplest way is for it to tumble down.

Tumble recovery is an acceptible method for rockets that are designed to fall slow enough that they don't land too hard. This is a bit tricky to do. Most designers create their tumbling booster sections by a gut-feel approach. They base their creations on past experience, and they size the booster so it doesn't fall too fast and land too hard. But there has to be a better way for modelers that want a more scientific approach.

The trick in designing a free-falling booster stage is to get the proportions right. That means the fins have to be large enough to create a lot of drag during the descent. On the other hand, if you are trying to minimize the rocket's weight (I'm thinking of the Team America Rocketry Challenge), you want to keep the fins as small as possible.

The fins also have be arranged in such a way that the part is unstable and will tumble down instead of coming in ballistically.

The big difference between a ballistic trajectory and a tumbling descent is the surface area exposed to the airstream,

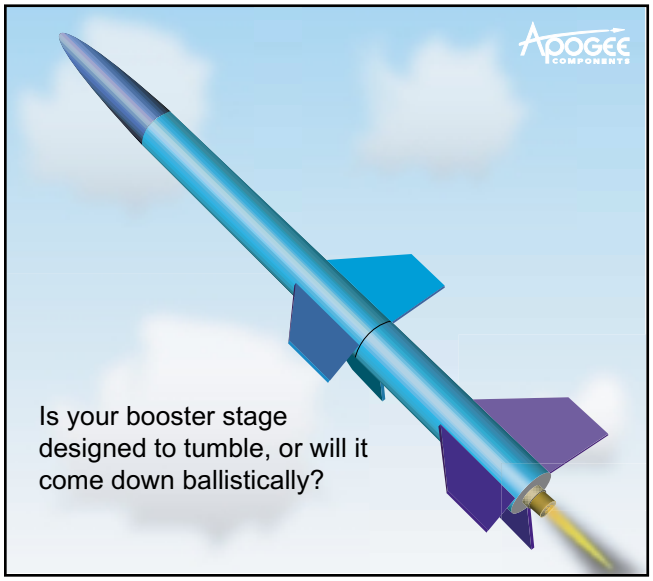

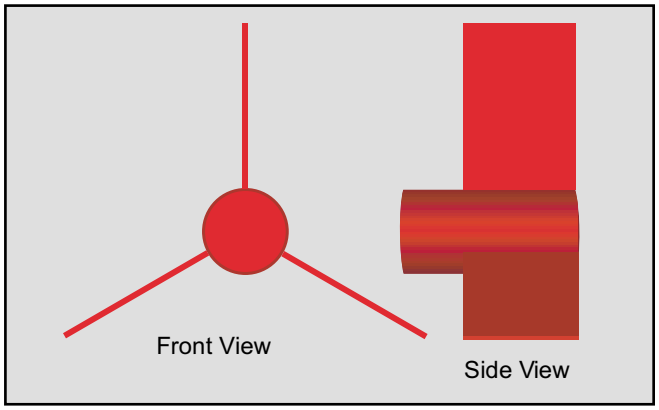

Figure 2: The side area of the booster stage is the big reason why tumbling boosters fall slowly.

and the Coefficient of Drag (C_d). The surface area is easiest to visuallize. As can be seen in the drawing above, the side profile has a much creater surface area exposed than the front-end profile of the stage.

The C_d is another thing that we'll need to determine. I'll go into this a little bit later. But for now, we need to realize that when the stage tumbles, the drag increases dramatically. If it didn't the rocket would fall too fast.

How to start?

First of all, when you design a booster stage, the fin location and their minimum size is determined by the overall configuration of the rocket. You can't make the fins so small that the rocket will be unstable when you launch it into the air. That would be silly.

I recommend starting by using the RockSim software. Even if you don't own the full version, you can still use the ***FREE*** demo edition to get enough information to design the rocket. You can download it from the Apogee Components web site at:
http://www.ApogeeRockets.com/rocksim_demo.asp

As you will notice, when you design with RockSim, it automatically will tell you whether or not the rocket is stable. This is what makes RockSim the best software for designing rockets of any size or configuration.

If your two-stage rocket isn't stable according to RockSim, you'll need to adjust the size or location of the fins.

As an example for this article, we'll start with the design shown in Figure 3 on the next page.

(Continued on Page 4)

Tumbling Booster Stages

(Continued from page 3)

With the basic size and shape of the rocket design done, we can now focus in on the booster stage to see if it will tumble to the ground safely.

Our next step is to go back into RockSim and start over. This time, we'll build just the booster stage. Instead of creating a two stage rocket and looking just at the booster, let's enter the booster stage as a single stage rocket.

Go to the design screen, and click on the general tab. This time, just click the button for a single stage design instead of a two stage design.

Now we'll go ahead and flush out the parts like we did previously. Instead of starting with a nose cone, we'll start the design with a body tube.

When you're done with that, you'll have a design that just looks like the next figure.

Go ahead and load a rocket motor into the design. This will give you the Center-of-Gravity (CG) location of the booster section at liftoff. This is shown in Figure 4. As you can see from the analysis, this particular booster stage is neutrally stable. There is a chance that it will come in ballistically

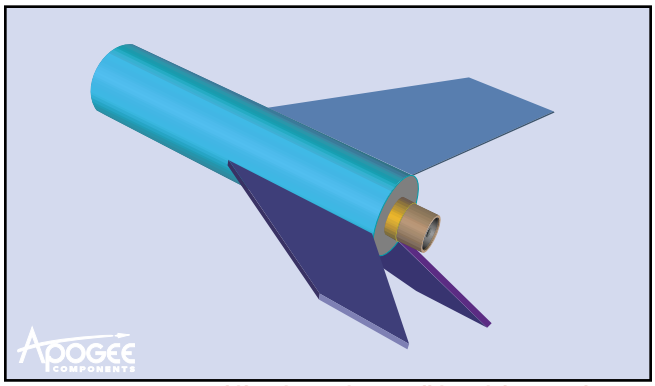

Figure 3: To see if the booster will tumble, we have to analyze it without the sustainer stage attached.

(which we don't want). Or it might tumble down. We need more information.

At this point, we are at the lift-off configuration. As the propellant in the motor is consumed, the back end of the stage will get lighter in weight. This means the CG will shift forward. We need to know the CG location of the stage at burnout. This is when it will actually start flying (or rather falling) on its own.

The burnout CG location is important. If the CG is forward of the Center-of-Pressure (CP), the stage will be stable;

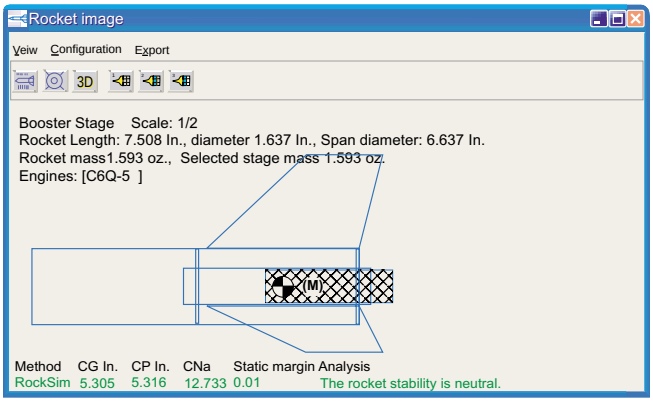

Figure 4: With the rocket engine loaded, we can find out if the stage will be stable or not. We want the booster stage to be unstable after the motor consumes all the propellant.

meaning it will come down ballistically. We don't want that. We want the CG to be aft of the CP location after all the propellant is burnt up..

Finding the Burnout CG Location

How do we find the burnout CG location? We go back to RockSim and run a simple simulation. We don't really care about the trajectory of the rocket or how high it goes. This isn't a real-life simulation anyway, since the upper stage isn't attached to the rocket. It is likely that the stage will be shown

(Continued on Page 5)

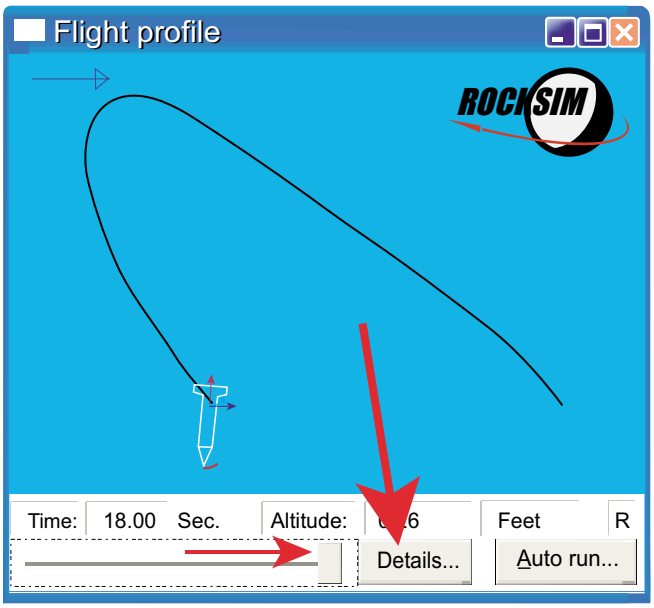

Figure 5: We'll use the 2-D Flight Profile to find the empty final CG location of the booster stage.

Tumbling Booster Stages

(Continued from page 4)

to be unstable and crash in the results window of RockSim. Just ignore this.

We'll now go to the "Simulation" menu, and select "2-D Flight Profile." This is shown in Figure 5.

What I want you to do is take the time-slider bar, and move it all the way to the right side. This will show the final seconds of the flight just before the rocket impacts the ground. We know that at this point, the rocket has fully burned all its propellant, and the CG shift will have occured.

Now click on the "Details" button. This will bring up a screen showing all the parameters that RockSim has calculated for the flight. See Figure 6.

Scroll down in the list until you see the CG and the CP

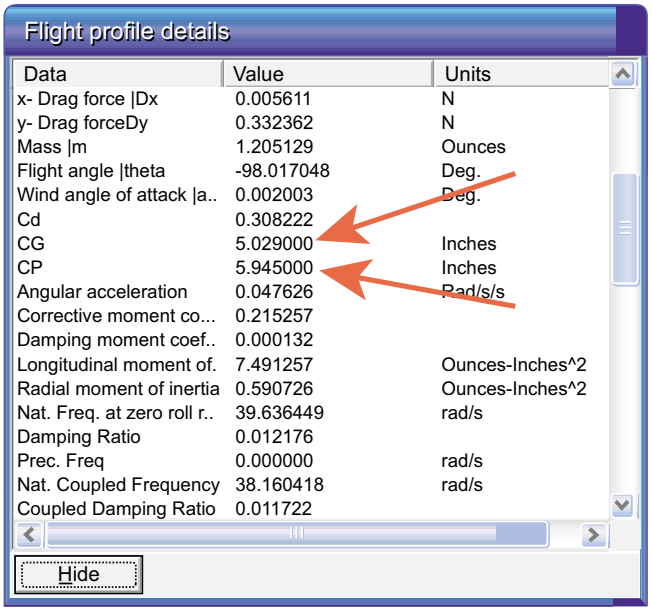

Flight profile details

Data	Value	Units
x- Drag force |Dx	0.005611	N
y- Drag forceDy	0.332362	N
Mass |m	1.205129	Ounces
Flight angle |theta	-98.017048	Deg.
Wind angle of attack |a..	0.002003	Deg.
Cd	0.308222	
CG	5.029000	Inches
CP	5.945000	Inches
Angular acceleration	0.047626	Rad/s/s
Corrective moment co...	0.215257	
Damping moment coef..	0.000132	
Longitudinal moment of.	7.491257	Ounces-Inches^2
Radial moment of inertia	0.590726	Ounces-Inches^2
Nat. Freq. at zero roll r..	39.636449	rad/s
Damping Ratio	0.012176	
Prec. Freq	0.000000	rad/s
Nat. Coupled Frequency	38.160418	rad/s
Coupled Damping Ratio	0.011722	

Hide

Figure 6: From the Flight Profile Details window, you can get the final CG location of the booster stage. Compare this to the static CP position shown in Figure 4.

location. Note the new value of the CG. It is different than the one on the main screen shown in Figure 4. This is because all the propellant in the motor has now burned off.

What you need to do is compare the final CG location with the CP location from the main screen. The number that is smaller means that it is the one that is the most forward on the rocket. In this sample design, the CG is 5.02 inches from the front, while the CP is 5.316 inches back. So our CG did move further forward in this design.

Since the CG if forward of the CP, this design will not tumble. It is stable, and will come down ballistically. We now know that this particular design is bad. If we want it to tumble recover, we need to make some changes to the stage. We can make the fins smaller, or move them forward on the rocket. We can also make the stage shorter and/or make the back end a little heavier.

If you noticed, on the "Flight Profile Details" screen, the CP also shifted. Why? And why not use this value instead of the CP location on the main screen?

The CP location on the main screen is the "static" location. If the rocket is flying at near zero Angle-of-Attack, this will be the correct location. As the angle of attack changes, the CP location will change too. That is what you are seeing in the details screen. We only care about the static CP location because as the stage falls off the rocket, it will likely be at a low angle of attack.

For more information on the CP shift, you may want to read the article *Stability of Short, Squat Rockets* in the Apogee e-zine back-issue #86. It can be downloaded from the Apogee web site
http://www.night.net/apogee/newsletter86.pdf

Will the Booster Stage Fall Slow Enough?

When you've got your design so that the CG is behind the CP, you've got the stage to the point where it will tumble down to the ground instead of coming in at ballistic speeds.

The next question is: how fast does the tumbling booster stage fall? Why do we even want to know the descent speed?

We want to know this answer, because we want to make sure our booster stage will survive the touchdown and that it will fall slow enough that it won't hurt anything if it lands on it. You don't want to ding the top of your car, would you? This is going to be particularly important for larger and heavier booster stages.

Since it is going to take a while to derive the equations for the descent speed, I'm going to leave it for future issue of this newsletter.

About the Author

Tim Van Milligan is the owner of Apogee Components (http://www.apogeerockets.com) and the new rocketry education web site: http://www.apogeerockets.com/education. He is also the author of the books: *Model Rocket Design and Construction*, *69 Simple Science Fair Projects with Model Rockets: Aeronautics* and publisher of the FREE e-zine newsletter about model rockets. You can subscribe to this e-zine at the Apogee Components web site, or sending any message to: ezine@apogeerockets.com with "SUBSCRIBE" as the subject of the message.

Motor Retention for Minimum Diameter Rockets - Addendum

(Continued from Newsletter #95)

By Tim Van Milligan

In the last e-zine, we discussed ways to restrain the rocket motors in minimum diameter tubes. This new method comes from Norm Dziedzic, and was first published in *The Leading Edge* newsletter (http://www.pleimling.org/le/JulAug02.pdf). Norm writes:

"Basically, you extend the aft end of the body tube beyond the fins and cut two openings in the tube as shown. The openings should be just slightly wider than the tape you use to hold the motor in place.

Then insert the motor into the tube until it is flush with the aft end and wrap tape around the tube at the location of the slots. The tape will grip the motor through the slots and serve as both a thrust block and ejection retainer.

For small motors, 1/4 inch wide masking tape should work fine. As this design is scaled up, wider tape and perhaps three openings will be required."

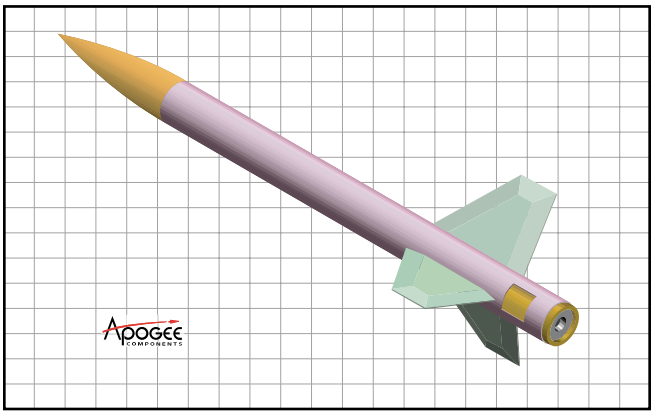

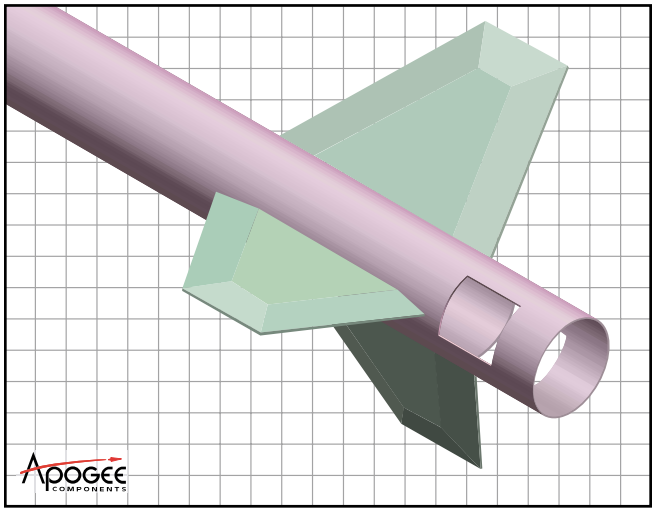

I think a small modification can be made for people that want to do competition flights. The cutouts might be moved forward and placed between the fins. And instead of completely wrapping the tape around the tube, you could just use small square pieces that just fit into the cut-outs. If the tape thickness is built-up a little bit, it would act as a wedge - preventing both forward and rearward movement of the motor. The added benefit is that both weight is reduced and the drag is minimized. And the tube wouldn't have to extend beyond the fins, further reducing the weight of the rocket. I've never tried it, but it is worth looking into.

FREE Demo Version
Download It NOW!

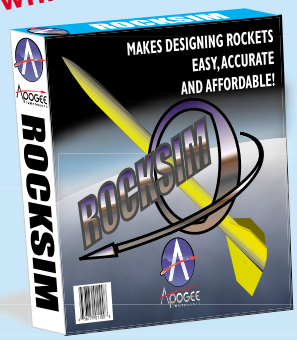

Compare Features!
Bargain Price of Just: $95

RockSim Makes Designing Rockets Easy, Accurate, and Affordable

- Easiest Software to Learn, and Fastest To Use.
- Create Templates and Patterns to Build Your Rockets.
- Generates The Most Accurate Simulation Results.
- Saves You Money By Preventing Design Errors and Launch Mistakes.
- Used By More Rocketeers - Because It Is So Reliable.
- Expandable and Compatible with Other Programs: AeroCFD FinSim, & HyperCFD.
- "The Best Value For Your Money!"

Apogee Components

Visit the Apogee web site for more information:
www.ApogeeRockets.com/rocksim.asp

FREE Plan: "Vipox" By Shrox

Download the FREE RockSim Plans And Decal Artwork!

The data file you need is at:
http://www.ApogeeRockets.com/shrox/vipox.html

When you download the file, you'll get a RockSim design file (which can be opened in the FREE demo version - see page 6), as well as another 3-view drawing of the Vipox. Plus, you'll get color decal artwork that you can print out to put on your completed rocket!

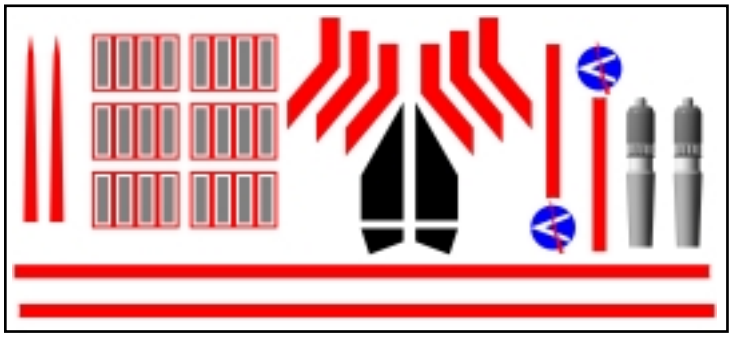

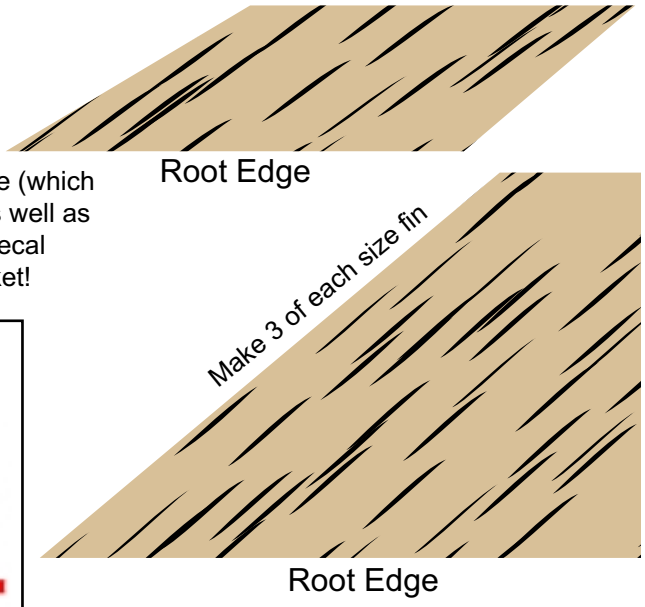

Archives of this Newsletter
All the articles that have appeared in this newsletter are archived at
http://www.apogeerockets.com/education/newsletter_archive.asp